6

PRECISION MOTORIZED POSITIONING STAGE 2014

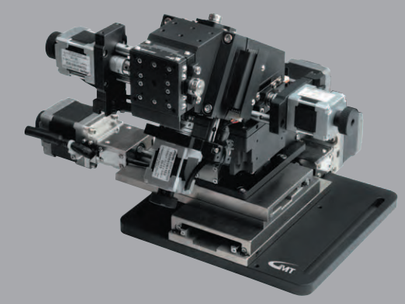

Precision Motorized Positioning Stage

GMT GLOBAL INC.

LASER AND

302-2725 Rue Notre Dame
Montreal, QC, H8S 2H3
CANADA
+1 (514) 452-4693
sales@laserand.com

www.laserand.com

2014.05.20

AC Design 04-27071159

GMT GLOBAL INC.

X axis (XY axis Z axis XZ axis XYZ axis)

AX□-A2	AXL□-A2	AXC□-A2	AXW□-A2
Material: Aluminum alloy			Material: Carbon steel

Guiding - Crossed roller

V grooved rail

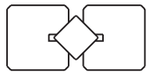

Drive type - Ball screw	Drive type - Ball screw

Table size (mm)	□40	□60	□80	□100	□120
Travel stroke (mm)	15	20	30	40	70
Load capacity (kgf)	6	21	23	25	

Table size (mm)	□40	□60	□80	□100	□120
Travel stroke (mm)	15	20	30	40	50
Load capacity (kgf)	4	5	7	10	15

Table size (mm)	□60	□80	□100	□120
Travel stroke (mm)	20	30	40	50
Load capacity (kgf)	5	7	10	15

Table size (mm)	□80	□100	□120
Travel stroke (mm)	30	40	50
Load capacity (kgf)	50	60	70

Repeatability accuracy
±0.5μm

Page	Page	Page	Page
C1~C4	**C21~C24**	**C29~C32**	**C37~C38**

Electrical Specification Page	Electrical Specification Page
D1~D2	**D3**

X axis (XY axis Z axis XZ axis XYZ axis)

CXS□-S2	CXN□-S2	CXC□-S2
Material: Stainless steel	Material: Stainless steel	

Guiding - Linear ball

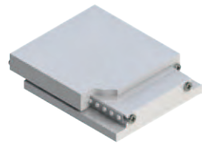

Guiding - Circular linear ball

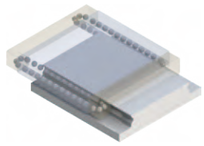

Gothic rail

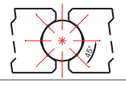

Gothic rail

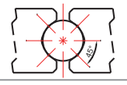

Drive type - Ball screw

Table size (mm)	□50	□60	□80
Travel stroke (mm)	20	30	20	30	50	20	30	50
Load capacity (kgf)	6	7	8

Table size (mm)	□50	□60	□80
Travel stroke (mm)	30	50	75	100	150	200	30	50	75	100	150	200	250	300
Load capacity (kgf)	10	14	16

Repeatability accuracy
±0.5μm

Page	Page
C41~C46	**C71~C86**

Electrical Specification Page	Electrical Specification Page
D4	**D5**

Horizontal Elevator axis

AZV□-A8

Material

Aluminum alloy

Guiding - Crossed roller

V grooved rail

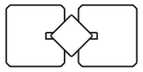

Drive type - Ball screw

Table size (mm)
□90

Travel stroke (mm)	
10	20

Load capacity (kgf)
5

Repeatability accuracy
±0.5μm

Page
C111~C112

Electrical Specification Page
D6

Goniometer α axis (αβ axis)

AXG□-VM3

Material

Aluminum alloy

Guiding - Crossed roller

V grooved rail

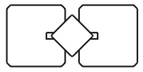

Drive type - Warm & warm gear

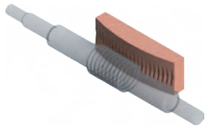

Table size (mm)	
□40	□60

Travel stroke (mm)			
±8°	±6°	±8°	±6°

Load capacity (kgf)	
3	5.1

Repeatability accuracy
±0.003°

Page
C121~C128

Electrical Specification Page
D9

Rotation axis (θ axis)

AR□-A3	AR□-A3	AR□-A3	AR□-A3
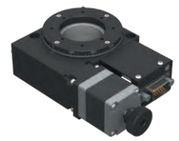	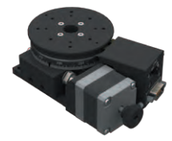		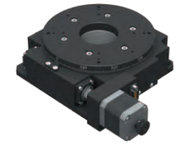

Material

Aluminum alloy

Guiding - Deep groove ball bearing	Guiding – Crossed-roller bearing	Guiding - Angular ball bearing	Guiding - Angular ball bearing
	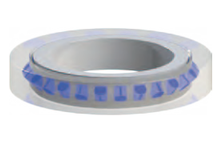		
Deep groove ball bearing	Crossed-roller bearing	Deep groove ball bearing	Angular ball bearing
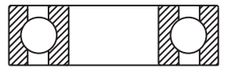	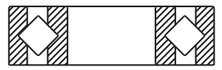	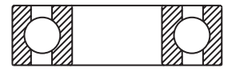	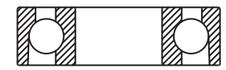

Drive type – Warm & warm gear

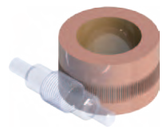

Table size (mm)		Table size (mm)	Table size (mm)		Table size (mm)	
Ø39	Ø59	Ø79	Ø100	Ø120	Ø159	Ø179

Travel stroke (mm)
360°

Load capacity (kgf)	Load capacity (kgf)	Load capacity (kgf)	Load capacity (kgf)
3	10	15	Horizontal 60 Vertical 10

Repeatability accuracy	Repeatability accuracy
±0.01°	±0.005°

Page
C113~C120

Electrical Specification Page	Electrical Specification Page
D7	**D8**

X axis (XY axis)

AX6020-A2/HP	AX6030-A2/HP	AX7050-S2/HP
Material	Material	
Aluminum alloy	Stainless steel	
Guiding - Crossed roller	Guiding - Linear ball	
	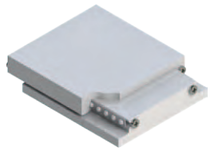	
V grooved rail	Gothic rail	
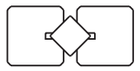	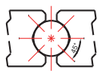	
Drive type - Ball screw	Drive type - Ball screw	Drive type - Ball screw
Table size (mm)	Table size (mm)	Table size (mm)
□60	60X70	70X110
Travel stroke (mm)	Travel stroke (mm)	Travel stroke (mm)
20	30	50
Load capacity (kgf)		Load capacity (kgf)
5		10
Repeatability accuracy		Repeatability accuracy
±0.3μm		±0.5μm
Page		Page
C129~130		**C131~132**
Electrical Specification Page		
D10		

Slide wedge driven horizontal elevator Z axis

AZ7010-A6/HP	AZ□-A6/HP
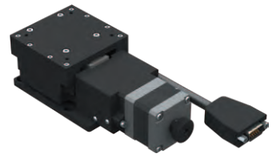	
Material	
Aluminum alloy	
Guiding - Crossed roller	
V grooved rail	
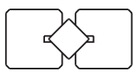	
Drive type - Ball screw	Drive type - Ball screw
Table size (mm)	Table size (mm)
□70	60X88 / 70X76
Travel stroke (mm)	Travel stroke (mm)
10	4
Load capacity (kgf)	Load capacity (kgf)
10	8
Repeatability accuracy	
±0.5μm	
Page	Page
C133~134	**C135~136**
Electrical Specification Page	Electrical Specification Page
D11	**D12**

This product is precision products. There are precautions in specifications or other aspects. To use the product correctly, please be familiar with the precautions in advance.

Unpacking Precautions

Before unpacking, check the appearance for damage, loose screws and loose components. If there are concerns about structure and appearance, please take photos as evidence and E-mail them to the responsible business unit.

When the shipment arrives, make sure that the specifications and contents are consistent with the order, and check whether any peripheral parts are missing.

For any questions, please contact the original business unit.

Safety Precautions

Before placement and use, make sure that there is sufficient working space around to prevent the danger of falling and rolling.
→ CAUTION: Violation may result in personal injury or product damage.

For installation and operation, please follow electrical safety instructions. Do not use in explosive atmosphere, flammable environment, corrosive environment, easily wet and humid environment or near flammable materials. Otherwise, there is risk of fire, electric shock and injury.
→ CAUTION: Violation may result in serious personal injury or product damage.

In operation, please check if there is enough movement space around the motor and mechanism to prevent any part of the body and clothing accessories from entering the stage or coming close to the working range of stage or any danger of rolling, pinching or pulling.
→ CAUTION: Violation may result in personal injury or product damage.

Turn off the power before maintenance to prevent danger of electric shock.
→ CAUTION: Violation may result in serious personal injury or product damage.

When the product is used in the vertical direction of Z axis, please use safety device for prevention (natural slide or power interruption due to overload).
→ CAUTION: Violation may result in personal injury or product damage.

Installation Precautions

When abnormal issue (such as abnormal sound, abnormal vibration) arises, please immediately stop the machine.
→ CAUTION: Violation may result in personal injury or product damage.

Do not forcibly pull or bend any electric wires and follow the wiring diagram for correct wiring.
→ CAUTION: Violation may result in personal injury or product damage.

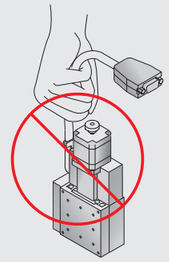

When tightening screws, please torque wrench according to the specifications of screws.
→ CAUTION: Violation may cause loosening.

Please do not allow mechanical setting over maximum speed to cause mechanical instability (avoiding extreme change of setting or parameters).
→ CAUTION: Violation may result in personal injury or product damage.

When malfunction or damage arises, please do not continue the use.
→ CAUTION: Violation may result in personal injury or product damage.

Make sure wiring and connection of electric equipment is secured. Make sure parameter setting is correct.
→ CAUTION: Violation may cause fire, electric shock, personal injury or product damage.

Environment Precaution

Foreign object such as dust, metal powder entering screw or slide rail may reduce life and cause excess wear.
→ If concerns exist, please implement dust prevention measures.

If the product is used as mechanical processing standard, it may affect life, performance and precision.
→ If the situation exists, please have installation on the base with reliable rigidity.

The product is designed and planned according to the direction specified in the catalog. Please check with GMT if other direction is used.
→ If the direction is other than horizontal direction, it will reduce life and increase probability of malfunction.

Before installation of our product, please make sure that the installation surface has no unnecessary object, and use alcohol to clean and prevent loss of installation precision.
→ Violation may cause the product installation precision unable to meet the catalog specification.

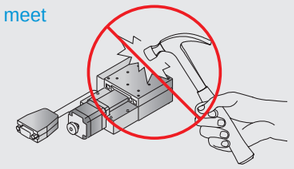

Do not apply inappropriate force and strike to the product to prevent damage and loss of precision and warranty.
→ Violation may cause product damage or precision unable to meet catalog specification.

Please do not turn off travel stroke limitation sensor during use to deactivate the sensor.
When turning the knob in the back of motor, please do not overuse the travel stroke.
→ Violation may result in personal injury or product damage.

During installation of peripheral mechanism on product upper board/ lower board, please keep the stage in horizontal position with fixation. (Make sure the platform installation flatness is within 0.01mm and the stage installation inclination angle is below 1° to prevent poor precision due to stage deformation.)
→ Violation may result in personal injury or product damage.

Do not remove any parts of the precision motorized stage arbitrarily to prevent loss of precision and warranty. If service is needed, please contact salesperson.
→ Violation may cause product damage or precision unable to meet catalog specification.

If screw hole does not fit or additional screw hole is needed, please contact salesperson; do not handle it by yourself to prevent loss of precision and warranty.
→ Violation may cause product damage or precision unable to meet catalog specification.

Accessories and parts of the product are not water-proof or dust-proof; please do not use the product directly in oil misty, dusty or humid environment.
→ Violation may cause product damage or precision unable to meet catalog specification.

Installation procedures:

1. Make sure that installation surface does not have any flash, dust or dent.
2. Please put the product on the installation surface.
3. Please adjust according to installation hole position (aiming screw hole).
4. It is suggested to use the screws in compliance with standard specifications.
5. Use torque wrench to tighten screw.

Precautions for product use environment:

Shipping temperaturet	-10℃ ~ 70℃
Shipping humidity	below 90%RH (non-condensing)
Installation temperature	0℃ ~ 40℃
Installation humidity	below 20% ~ 80%RH (non-condensing)
Environment gas	indoor (not contain corrosive gas, flammable gas, oil mist and dust)

System Configuration Diagram

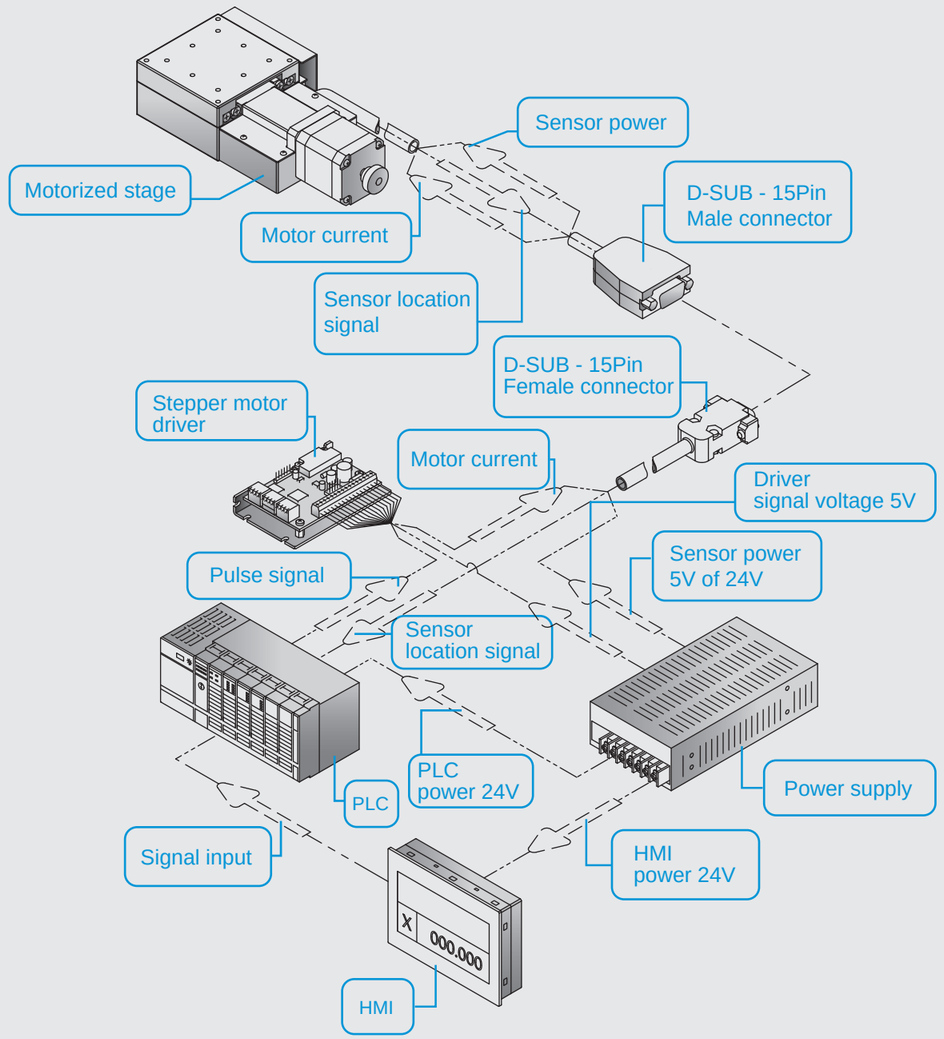

- For detailed specifications, please read the description for the stage and connecting cable on page E1 ~ E2.
- For selection of driver, please refer to the cross-reference table on page E3 for the motor/driver of the precision motorized stage or the GMT motor and driver catalog.
- The most preferred driver is recommended to be specified by GMT as considerations. For different needs, please choose the suitable driver based on real functional needs.

Warranty Instructions

- Within warranty period, if any failures occured under nomal usage without human nagligence, our company will be responsible for the repair.
- Warranty period is one year, starting from the time the product is delivered to the designated place.

- If anything below occurs, it will not be covered under warranty:

1. Failure that occurs when the product is not used in specified environment and method.
2. Failure that occurs when the product is modified or repaired without authorization.
3. Failure that occurs due to natural disaster or misuse.
4. Fault or damage after customer purchase due to fall or impact during shipping or movement.
5. Malfunction or damage due to connection to other machine.
6. Violation to the above instructions and precautions on the manual will cause malfunction or damage.

Troubleshooting Suggestions

- After the motor or mechanism is hit by external force, please check whether screw function affects stage.
- Please do not arbitrarily adjust left and right limit position and origin position to prevent machine collision and loss of warranty.
- Limit switch must have secured wires and receptacles and be prevented from loosen.
- Do not arbitrarily loose coupling and transmission structure to assure precision and warranty.
- When unusual noise or vibration occurs in the operation of machine, please turn off power before inspection.
- For Q&A regarding stage, please check GMT website.

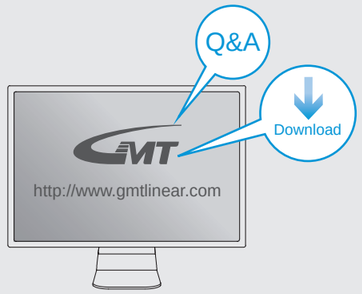

Axis Definition

GMT has defined different axis as the following figuration according to the movement direction:
Horizontal movement direction is X and Y axis.
Vertical movement direction is Z axis.
Movement around X, Y, Z axis is defined to α axis, β axis, and θ axis.
Green arrows present the specified axis movement direction.

X axis	AX	XY axis	AY
	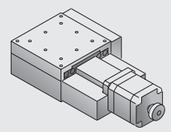		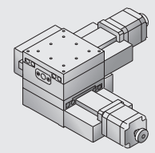

Z axis	AZL	AZV	AZ
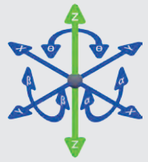	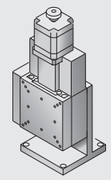	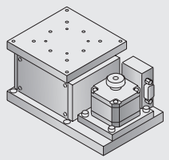	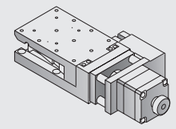

XZ axis	AXZ	XYZ axis	AXYZ
	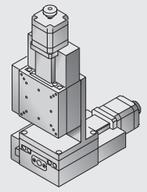		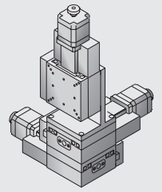

α axis	AXG	αβ axis	AYG
	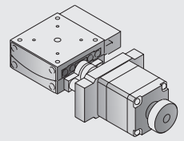		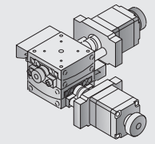

θ axis	AR		
	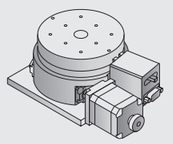	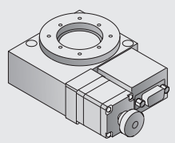	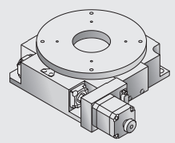

AX series

Model description

Material	Drive type	Accuracy level	Wiring method	Motor model	Connector type
A Aluminum alloy	2 Ball screw	P Precision grade	R Right wiring L Left wiring	C 5-phase stepper X Not equipped	D D-SUB15 (VGA)

AX 40 - A 2 P R - C D - 2 C

Axis & serial numbers	
AX	X axis

Table size	
40	40*40mm
60	60*60mm
80	80*80mm
100	100*100mm
120	120*120mm

Connecting cable (optional)	
Blank	Not equipped
2	2m cable*1
4	4m cable*1
6	6m cable*1

*1 (D-SUB 15 pin female connector + the other side with discrete wirings)

Driver (optional)	
Blank	Not equipped
C	Standard specified by GMT

Model Number			AX40-A2PR-CD	AX60-A2PR-CD	AX80-A2PR-CD	AX100-A2PR-CD	AX120-A2PR-CD
Mechanical specifications	Table size		40X40 mm	60X60 mm	80X80 mm	100X100 mm	120X120 mm
	Travel stroke		15 mm	20 mm	30 mm	40 mm	70 mm
	Drive type		Ball screw Ø6 lead 1mm		Ball screw Ø8 lead 1mm		
	Rail		Crossed-roller guiding				
	Stage material/Surface treatment		Aluminum alloy / Black anodized				
	Main unit weight		0.37 Kg	0.64 Kg	1.2 Kg	1.65 Kg	2.6 Kg
	Coupling		FAMMS12-3*5	FAMS16-5*5	FAMMS16-5*5		
	Accuracy level		P : Precision grade				
	Wiring method		R : Right wiring				
Precision specifications	Resolution (pulse)	Full / Half	2 μm / 1 μm				
	Maximum speed (full step)		10 mm / sec				
	Positioning precision		5 μm				10 μm
	Repeatability precision		±0.5 μm				
	Load capacity		6 Kgf		21 Kgf	23 Kgf	25 Kgf
	Missed step		1 μm				
	Parallelism		20 μm				
	Dynamic straightness		2 μm				
	Dynamic parallelism		6.6 μm		10 μm		
Electrical specifications	Motor	Type/Shaft numbers	5-phase stepper / ☐28 double shafts		5-phase stepper / ☐42 double shafts		
		Brand/ Model	Sanyo / SH5281-7211		Sanyo / 103F5510-8211		
	Driver brand/Model		Please refer to motor / driver cross-reference table (page E3)				
	Connector	Stage side connector	15-pin male end connector D-SUB				
		Controller side connector	15-pin female end connector D-SUB (optional)				
	Sensor	Origin sensor	Photoelectric sensor EE-SX4134				
		Limit sensor					
		Origin approximation sensor	N / A		Photoelectric sensor EE-SX912-R		
		Power voltage	24V±10%				
		Control output	NPN open collector output under 24V 8mA				
		Output control	Testing (sensing) : output transistor OFF (closed)				

X axis

AX40-A2PR-CD

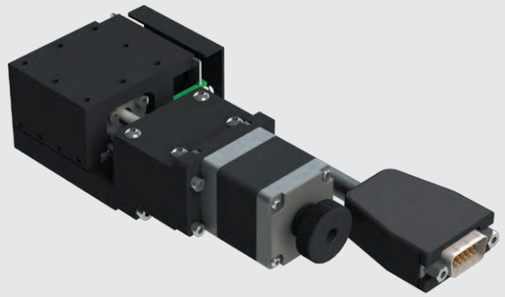

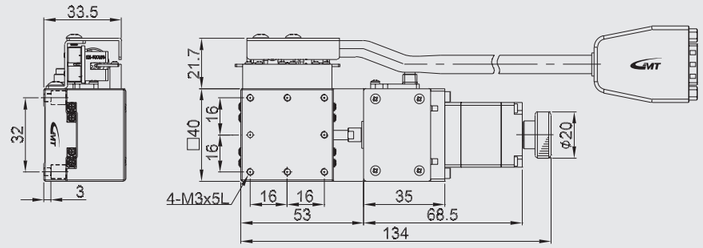

AX60-A2PR-CD

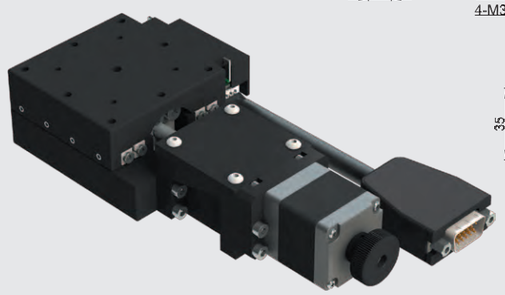

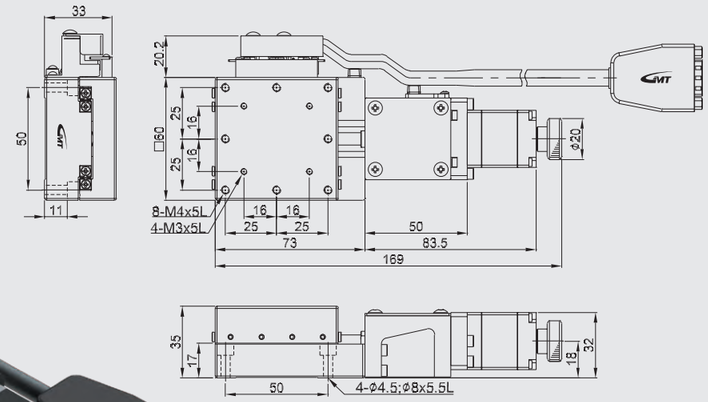

AX80-A2PR-CD

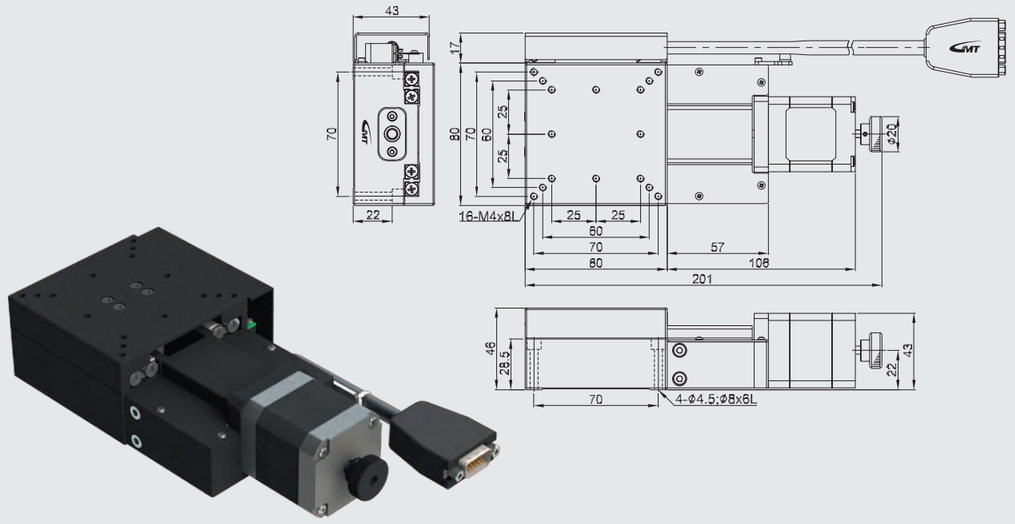

AX100-A2PR-CD

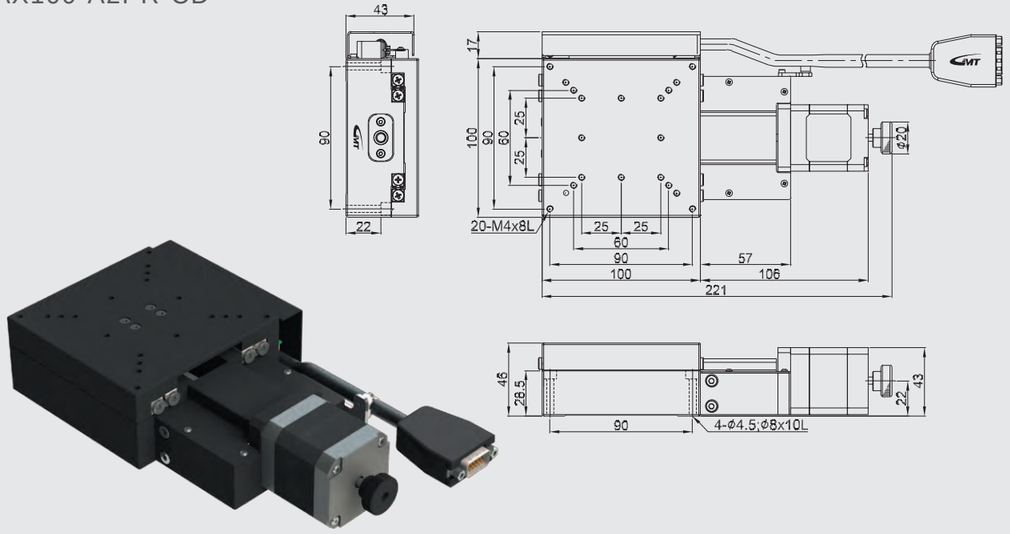

AX120-A2PR-CD

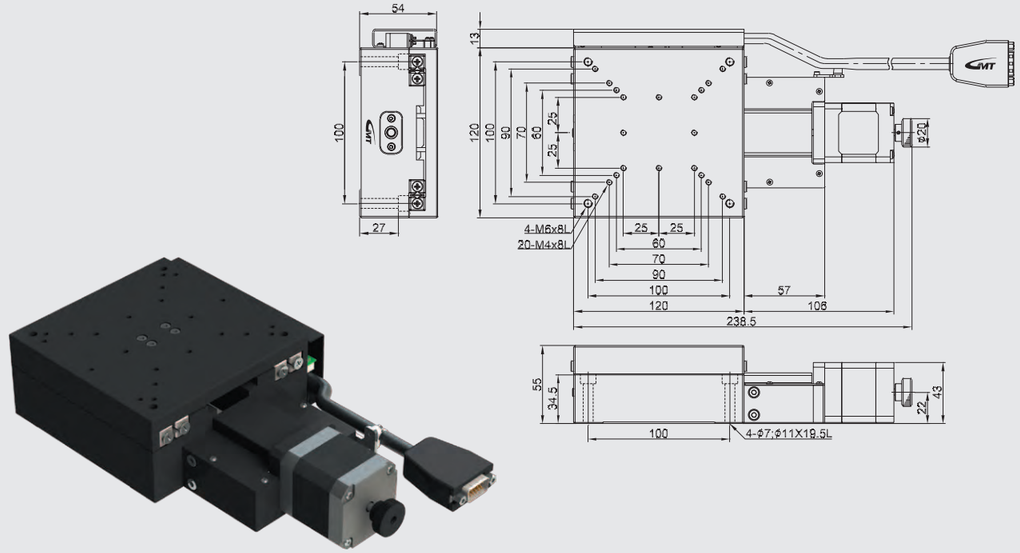

AY series

Model description

Material	Drive type	Accuracy level	Wiring method	Motor model	Connector type
A Aluminum alloy	2 Ball screw	P Precision grade	R Right wiring L Left wiring	C 5-phase stepper X Not equipped	D D-SUB15 (VGA)

AY 40 - A 2 P R - C D - 2 C

Axis & serial numbers	Table size	Connecting cable (optional)	Driver (optional)
AY XY axis	40 40*40mm 60 60*60mm 80 80*80mm 100 100*100mm 120 120*120mm	Blank Not equipped 2 2m cable*1 4 4m cable*1 6 6m cable*1	Blank Not equipped C Standard specified by GMT

*1 (D-SUB 15 pin female connector + the other side with discrete wirings)

Model Number			AY40-A2PR-CD	AY60-A2PR-CD	AY80-A2PR-CD	AY100-A2PR-CD	AY120-A2PR-CD
Mechanical specifications	Table size		40X40 mm	60X60 mm	80X80 mm	100X100 mm	120X120 mm
	Travel stroke		15 mm	20 mm	30 mm	40 mm	70 mm
	Drive type		Ball screw Ø6 lead 1mm		Ball screw Ø8 lead 1mm		
	Rail		Crossed-roller guiding				
	Stage material/Surface treatment		Aluminum alloy / Black anodized				
	Main unit weight		0.76 Kg	1.38 Kg	2.42 Kg	3.3 Kg	5.24 Kg
	Coupling		FAMMS12-3*5	FAMS16-5*5	FAMMS16-5*5		
	Accuracy level		P：Precision grade				
	Wiring method		R：Right wiring				
Precision specifications	Resolution (pulse)	Full / Half	2 μm / 1 μm				
	Maximum speed (full step)		10 mm / sec				
	Positioning precision		5 μm				10 μm
	Repeatability precision		±0.5 μm				
	Load capacity		5.5 Kgf		19 Kgf	21 Kgf	23 Kgf
	Missed step		1 μm				
	Parallelism		20 μm				
	Dynamic straightness		2 μm				
	Dynamic parallelism		6.6 μm		10 μm		
Electrical specifications	Motor	Type/Shaft numbers	5-phase stepper / ☐28 double shafts		5-phase stepper / ☐42 double shafts		
		Brand/ Model	Sanyo / SH5281-7211		Sanyo / 103F5510-8211		
	Driver brand/Model		Please refer to motor / driver cross-reference table (page E3)				
	Connector	Stage side connector	15-pin male end connector D-SUB				
		Controller side connector	15-pin female end connector D-SUB (optional)				
	Sensor	Origin sensor	Photoelectric sensor EE-SX4134				
		Limit sensor					
		Origin approximation sensor	N / A		Photoelectric sensor EE-SX912-R		
		Power voltage	24V±10%				
		Control output	NPN open collector output under 24V 8mA				
		Output control	Testing (sensing)：output transistor OFF (closed)				

XY axis

AY40-A2PR-CD

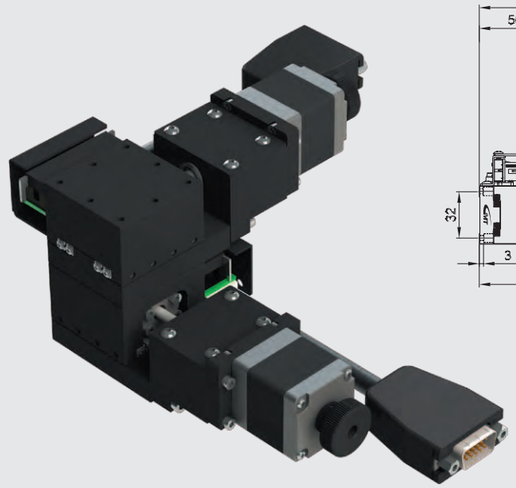

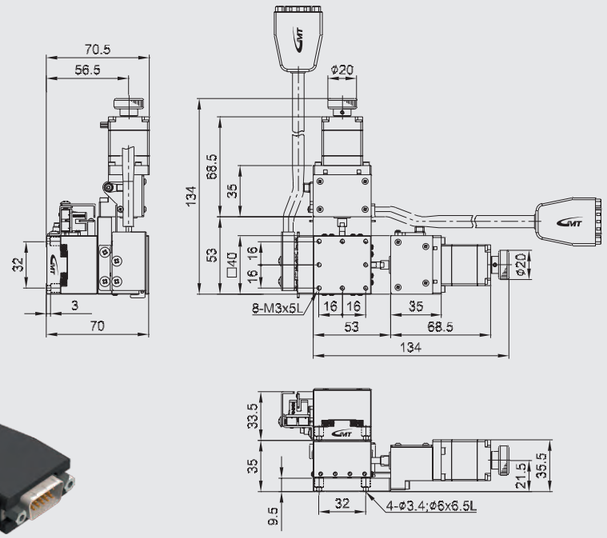

AY60-A2PR-CD

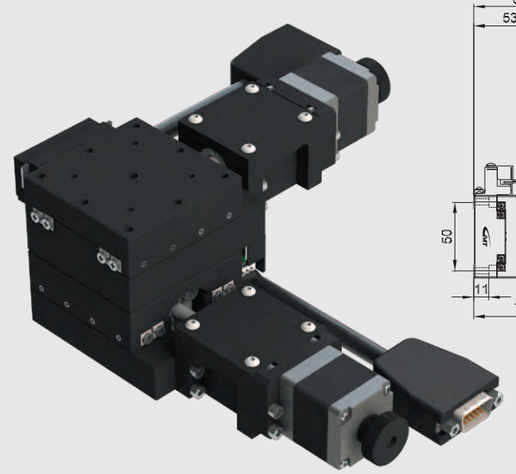

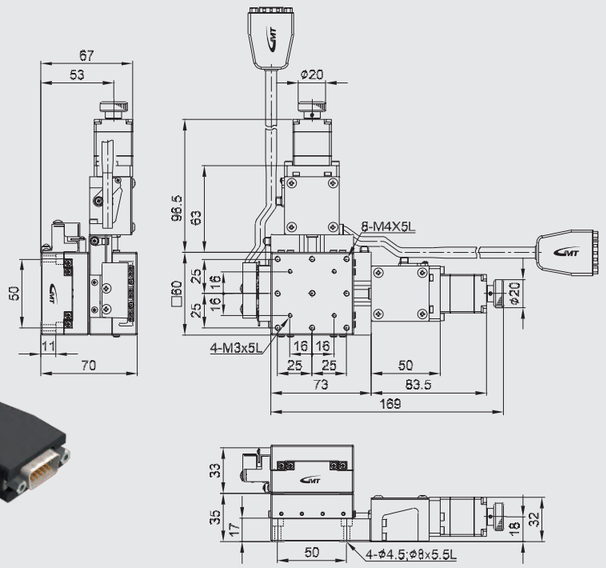

AY80-A2PR-CD

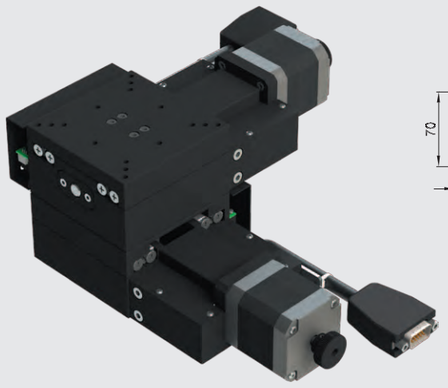

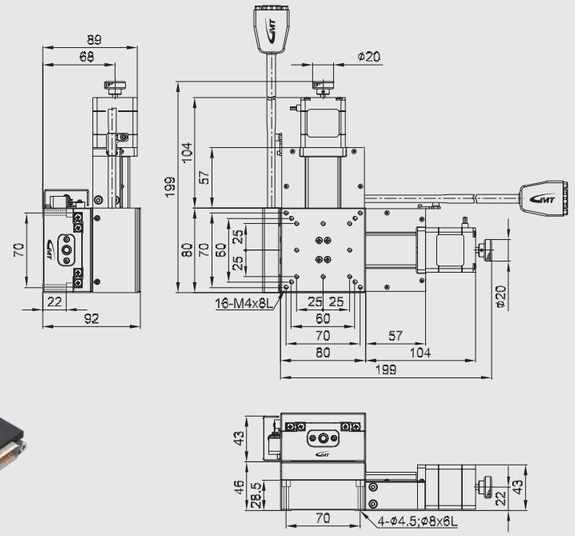

AY100-A2PR-CD

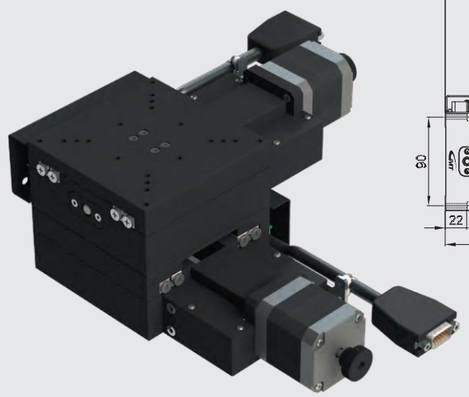

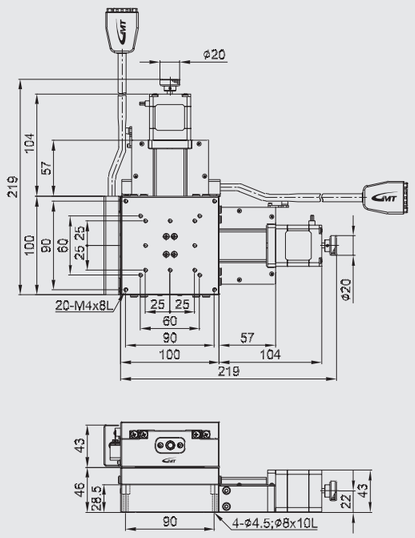

AY120-A2PR-CD

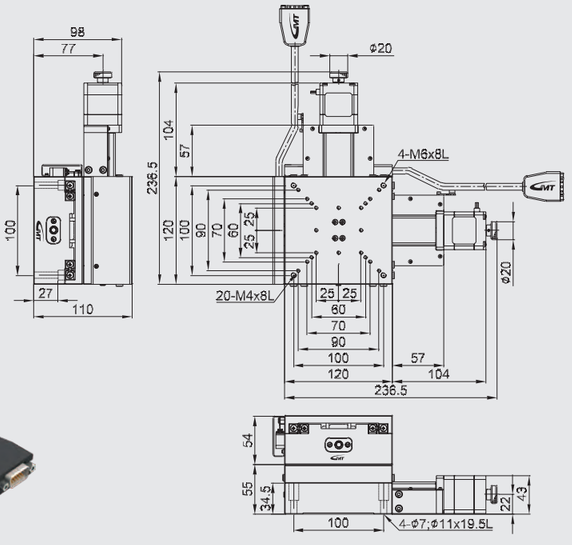

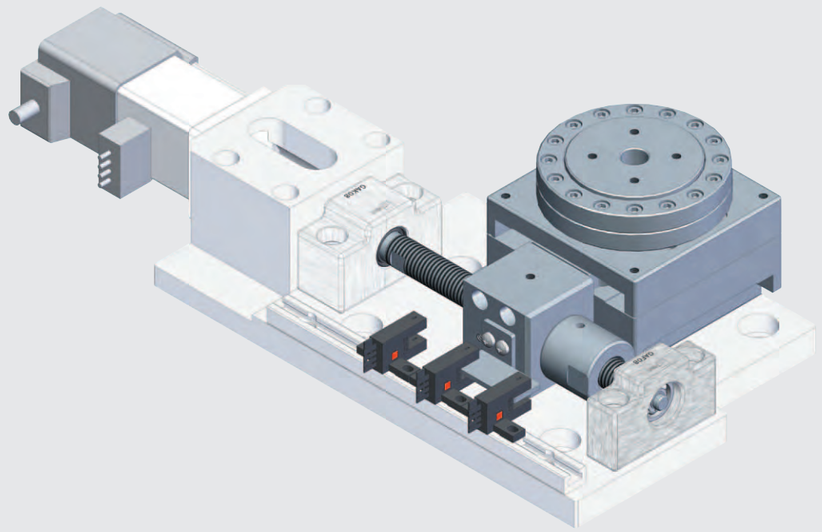

AZL series

Model description

Material	Drive type	Accuracy level	Wiring method	Motor model	Connector type
A Aluminum alloy	2 Ball screw	P Precision grade	R Right wiring L Left wiring	C 5-phase stepper X Not equipped	D D-SUB15 (VGA)

AZL 40 - A 2 P R - C D - 2 C

Axis & serial numbers	Table size	Connecting cable (optional)	Driver (optional)
AZ Z axis	40 40*40mm 60 60*60mm 80 80*80mm 100 100*100mm 120 120*120mm	Blank Not equipped 2 2m cable*1 4 4m cable*1 6 6m cable*1	Blank Not equipped C Standard specified by GMT

*1 (D-SUB 15 pin female connector + the other side with discrete wirings)

Model Number			AZL40-A2PR-CD	AZL60-A2PR-CD	AZL80-A2PR-CD	AZL100-A2PR-CD	AZL120-A2PR-CD
Mechanical specifications	Table size		40X40 mm	60X60 mm	80X80 mm	100X100 mm	120X120 mm
	Travel stroke		15 mm	20 mm	30 mm	40 mm	70 mm
	Drive type		Ball screw Ø6 lead 1mm		Ball screw Ø8 lead 1mm		
	Rail		Crossed-roller guiding				
	Stage material/Surface treatment		Aluminum alloy / Black anodized				
	Main unit weight		0.45 Kg	1.01 Kg	3.1 Kg	2.67 Kg	4.2 Kg
	Coupling		FAMMS12-3*5	FAMS16-5*5	FAMMS16-5*5		
	Accuracy level		P：Precision grade				
	Wiring method		R：Right wiring*2				
Precision specifications	Resolution (pulse)	Full / Half	2 μm / 1 μm				
	Maximum speed (full step)		10 mm / sec				
	Positioning precision		5 μm				10 μm
	Repeatability precision		±0.5 μm				
	Load capacity		4 Kgf		10 Kgf	12 Kgf	14 Kgf
	Missed step		1 μm				
	Parallelism		20 μm				
	Dynamic straightness		2 μm				
	Dynamic parallelism		6.6 μm		10 μm		
Electrical specifications	Motor	Type/Shaft numbers	5-phase stepper / □28 double shafts		5-phase stepper / □42 double shafts		
		Brand/ Model	Sanyo / SH5281-7211		Sanyo / 103F5510-8211		
	Driver brand/Model		Please refer to motor / driver cross-reference table (page E3)				
	Connector	Stage side connector	15-pin male end connector D-SUB				
		Controller side connector	15-pin female end connector D-SUB (optional)				
	Sensor	Origin sensor	Photoelectric sensor EE-SX4134				
		Limit sensor					
		Origin approximation sensor	N / A		Photoelectric sensor EE-SX912-R		
		Power voltage	24V±10%				
		Control output	NPN open collector output under 24V 8mA				
		Output control	Testing (sensing)：output transistor OFF (closed)				

*2 Right wiring is defined as Z-axis of the product photo.

Z axis

AZL40-A2PR-CD

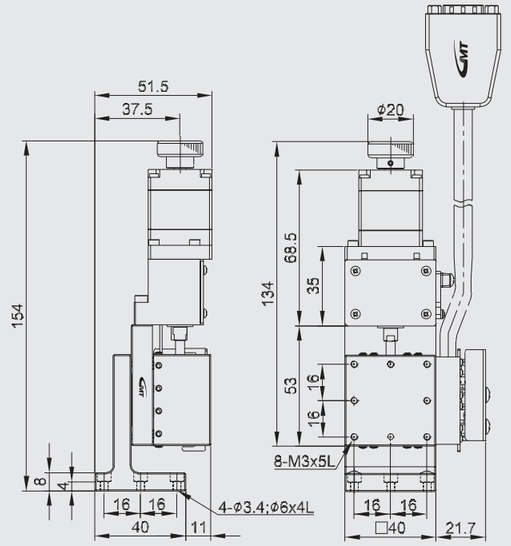

AZL60-A2PR-CD

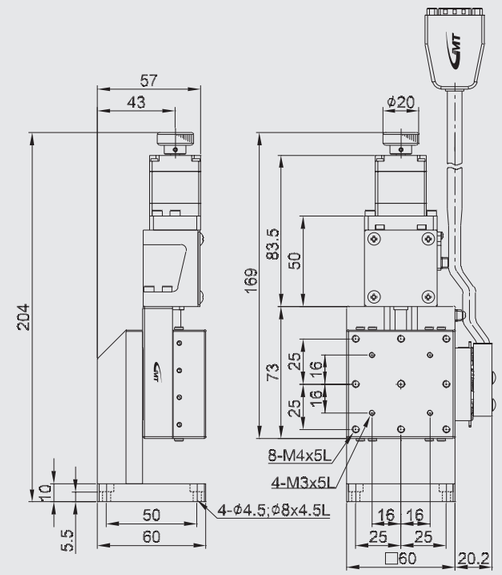

AZL80-A2PR-CD

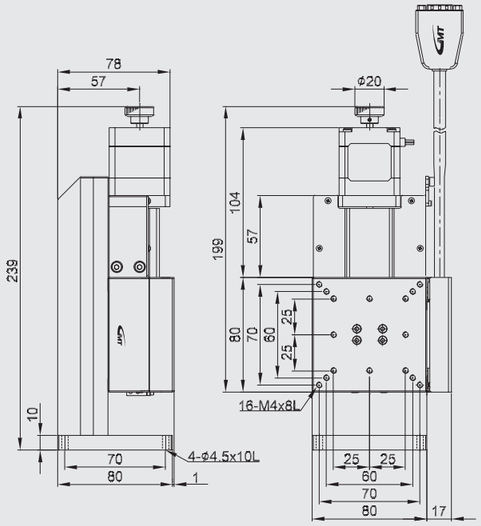

AZL100-A2PR-CD

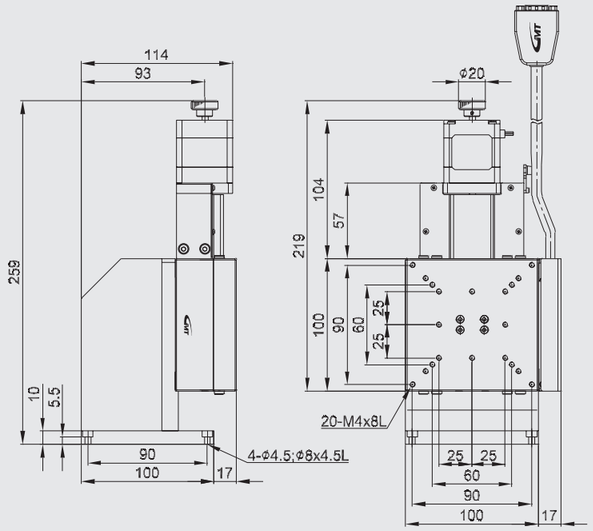

AZL120-A2PR-CD

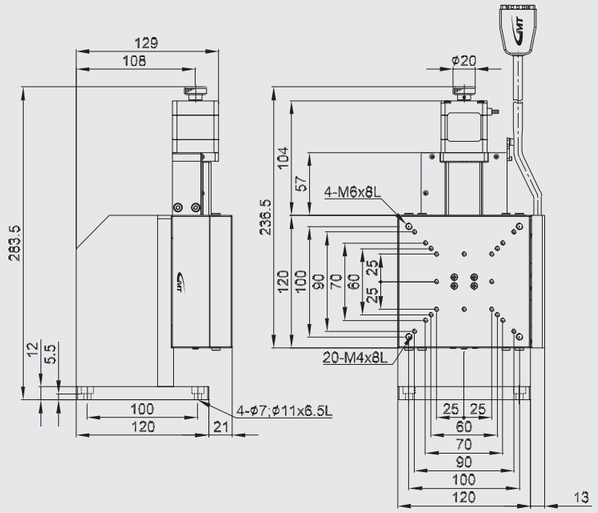

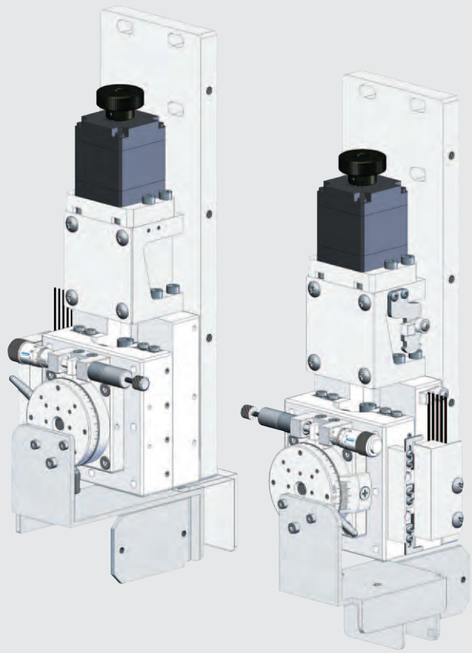

AXZ series

Model description

Material	Drive type	Accuracy level	Wiring method	Motor model	Connector type
A Aluminum alloy	2 Ball screw	P Precision grade	R Right wiring L Left wiring	C 5-phase stepper X Not equipped	D D-SUB15 (VGA)

AXZ 40 - A 2 P L - C D - 2 C

Axis & serial numbers	Table size	Connecting cable (optional)	Driver (optional)
AXZ XZ axis	40 40*40mm 60 60*60mm 80 80*80mm 100 100*100mm 120 120*120mm	Blank Not equipped 2 2m cable*1 4 4m cable*1 6 6m cable*1	Blank Not equipped C Standard specified by GMT

*1 (D-SUB 15 pin female connector + the other side with discrete wirings)

Model Number			AXZ40-A2PL-CD	AXZ60-A2PL-CD	AXZ80-A2PL-CD	AXZ100-A2PL-CD	AXZ120-A2PL-CD
Mechanical specifications	Table size		40X40 mm	60X60 mm	80X80 mm	100X100 mm	120X120 mm
	Travel stroke		15 mm	20 mm	30 mm	40 mm	70 mm
	Drive type		Ball screw Ø6 lead 1mm		Ball screw Ø8 lead 1mm		
	Rail		Crossed-roller guiding				
	Stage material/Surface treatment		Aluminum alloy / Black anodized				
	Main unit weight		0.82 Kg	1.65 Kg	4.3 Kg	4.32 Kg	6.84 Kg
	Coupling		FAMMS12-3*5	FAMS16-5*5	FAMMS16-5*5		
	Accuracy level		P：Precision grade				
	Wiring method		L：Left wiring*2				
Precision specifications	Resolution (pulse)	Full / Half	2 μm / 1 μm				
	Maximum speed (full step)		25 mm / sec		20 mm / sec		
	Positioning precision		5 μm				10 μm
	Repeatability precision		±0.5 μm				
	Load capacity		4 Kgf		10 Kgf	12 Kgf	14 Kgf
	Missed step		1 μm				
	Parallelism		20 μm				
	Dynamic straightness		2 μm				
	Dynamic parallelism		6.6 μm		10 μm		
Electrical specifications	Motor	Type/Shaft numbers	5-phase stepper / ☐28 double shafts		5-phase stepper / ☐42 double shafts		
		Brand/ Model	Sanyo / SH5281-7211		Sanyo / 103F5510-8211		
	Driver brand/Model		Please refer to motor / driver cross-reference table (page E3)				
	Connector	Stage side connector	15-pin male end connector D-SUB				
		Controller side connector	15-pin female end connector D-SUB (optional)				
	Sensor	Origin sensor	Photoelectric sensor EE-SX4134				
		Limit sensor					
		Origin approximation sensor	N / A		Photoelectric sensor EE-SX912-R		
		Power voltage	24V±10%				
		Control output	NPN open collector output under 24V 8mA				
		Output control	Testing (sensing)：output transistor OFF (closed)				

*2 Left wiring is defined as Z-axis of the product photo.

XZ axis

AXZ40-A2PL-CD

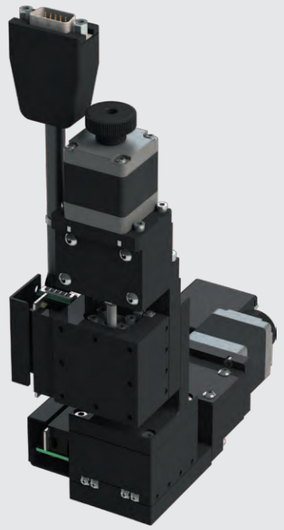

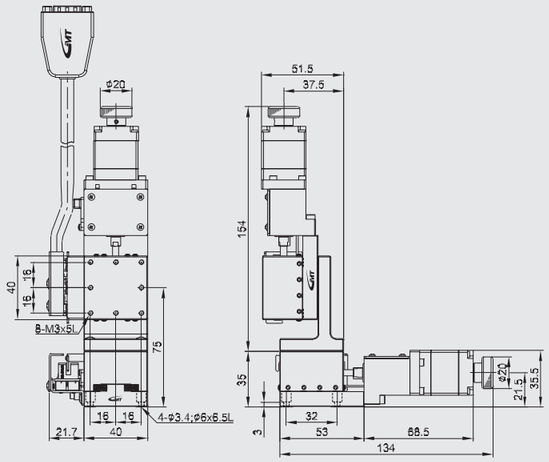

AXZ60-A2PL-CD

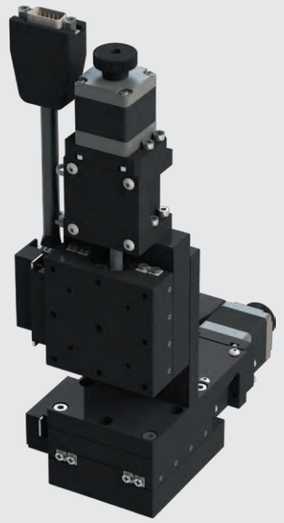

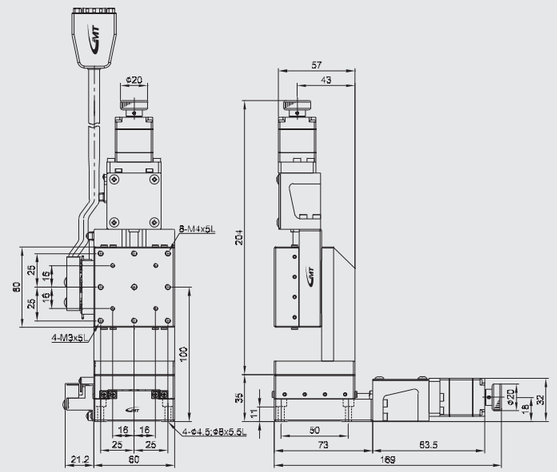

AXZ80-A2PL-CD

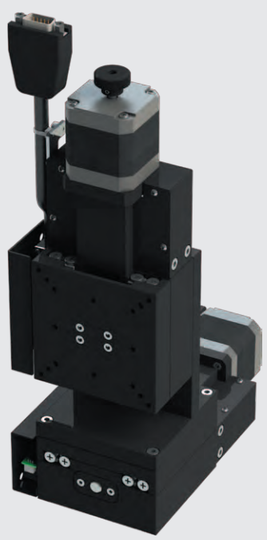

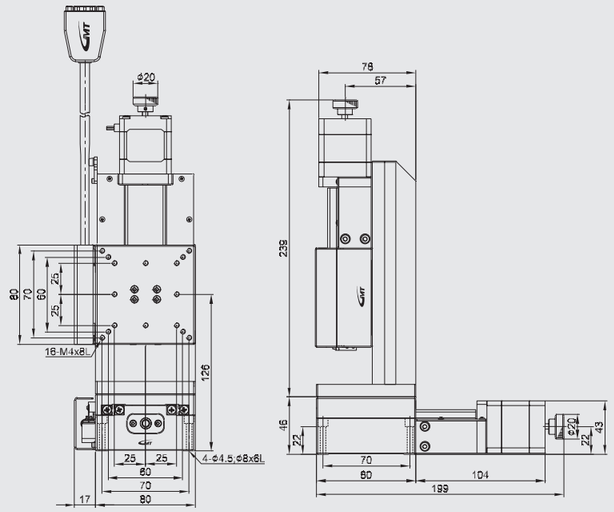

AXZ100-A2PL-CD

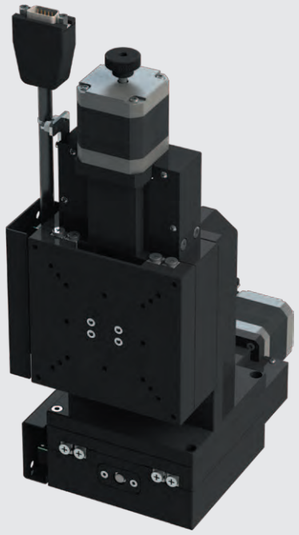

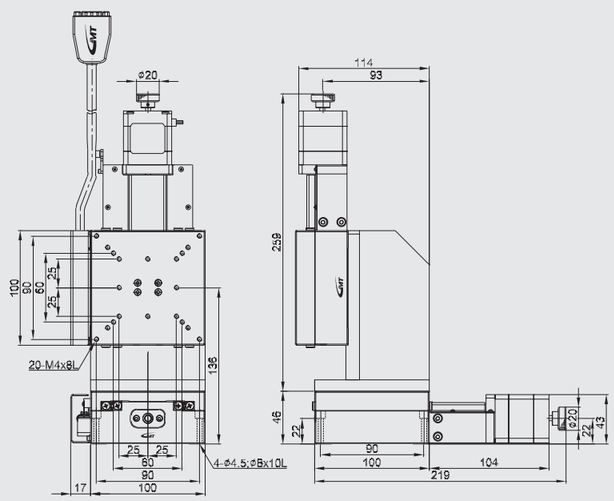

AXZ120-A2PL-CD

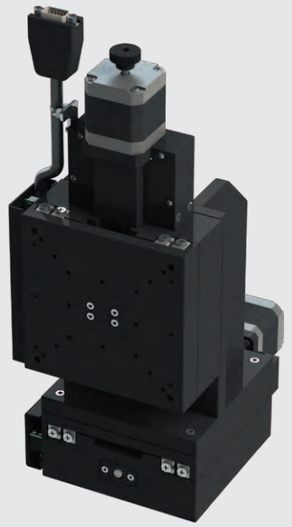

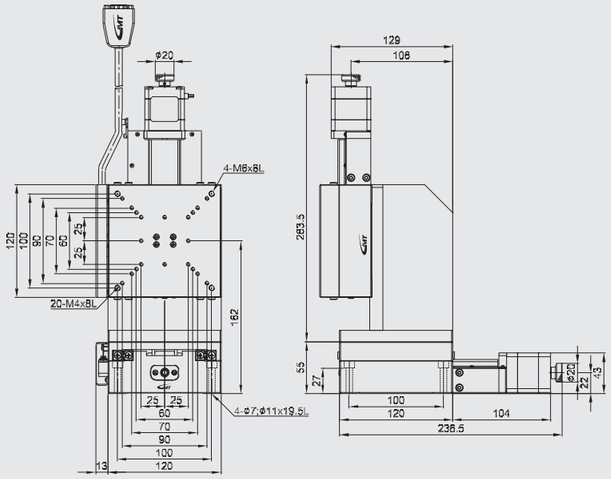

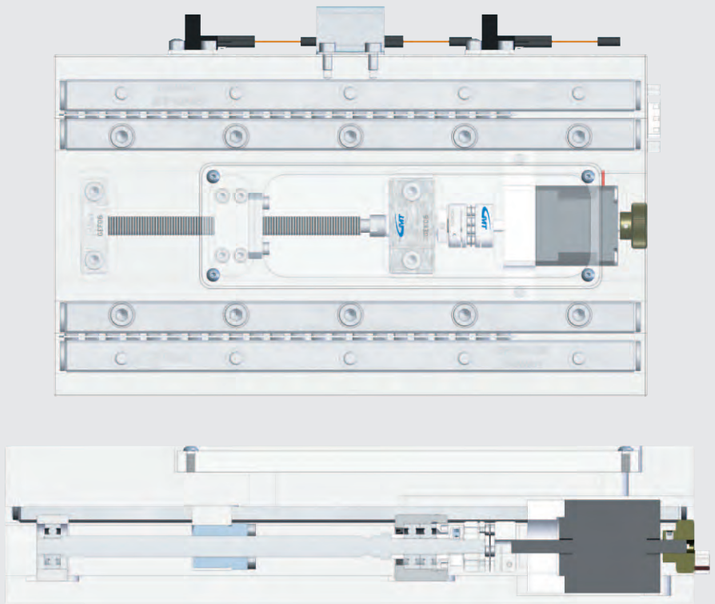

AXYZ series

Model description

Material	Drive type	Accuracy level	Wiring method	Motor model	Connector type
A Aluminum alloy	2 Ball screw	P Precision grade	R Right wiring L Left wiring	C 5-phase stepper X Not equipped	D D-SUB15 (VGA)

AXYZ 40 - A 2 P L - C D - 2 C

Axis & serial numbers	
AXYZ	XYZ axis

Table size	
40	40*40mm
60	60*60mm
80	80*80mm
100	100*100mm
120	120*120mm

Connecting cable (optional)	
Blank	Not equipped
2	2m cable*1
4	4m cable*1
6	6m cable*1

*1 (D-SUB 15 pin female connector + the other side with discrete wirings)

Driver (optional)	
Blank	Not equipped
C	Standard specified by GMT

	Model Number	AXYZ40-A2PL-CD	AXYZ60-A2PL-CD	AXYZ80-A2PL-CD	AXYZ100-A2PL-CD	AXYZ120-A2PL-CD
Mechanical specifications	Table size	40X40 mm	60X60 mm	80X80 mm	100X100 mm	120X120 mm
	Travel stroke	15 mm	20 mm	30 mm	40 mm	70 mm
	Drive type	Ball screw Ø6 lead 1mm		Ball screw Ø8 lead 1mm		
	Rail	Crossed-roller guiding				
	Stage material/Surface treatment	Aluminum alloy / Black anodized				
	Main unit weight	1.21 Kg	2.39 Kg	5.52 Kg	5.97 Kg	9.44 Kg
	Coupling	FAMMS12-3*5	FAMS16-5*5	FAMMS16-5*5		
	Accuracy level	P：Precision grade				
	Wiring method	L：Left wiring*2				
Precision specifications	Resolution (pulse) Full / Half	2 μm / 1 μm				
	Maximum speed (full step)	10 mm / sec				
	Positioning precision	5 μm				10 μm
	Repeatability precision	±0.5 μm				
	Load capacity	3 Kgf		9 Kgf	11.5 Kgf	13.5 Kgf
	Missed step	1 μm				
	Parallelism	20 μm				
	Dynamic straightness	2 μm				
	Dynamic parallelism	6.6 μm		10 μm		
Electrical specifications	Motor Type/Shaft numbers	5-phase stepper / ☐28 double shafts		5-phase stepper / ☐42 double shafts		
	Motor Brand/ Model	Sanyo / SH5281-7211		Sanyo / 103F5510-8211		
	Driver brand/Model	Please refer to motor / driver cross-reference table (page E3)				
	Connector Stage side connector	15-pin male end connector D-SUB				
	Connector Controller side connector	15-pin female end connector D-SUB (optional)				
	Sensor Origin sensor / Limit sensor	Photoelectric sensor EE-SX4134				
	Sensor Origin approximation sensor	N / A		Photoelectric sensor EE-SX912-R		
	Sensor Power voltage	24V±10%				
	Sensor Control output	NPN open collector output under 24V 8mA				
	Sensor Output control	Testing (sensing)：output transistor OFF (closed)				

*2 Left wiring is defined as Z-axis of the product photo.

XYZ axis

AXYZ40-A2PL-CD

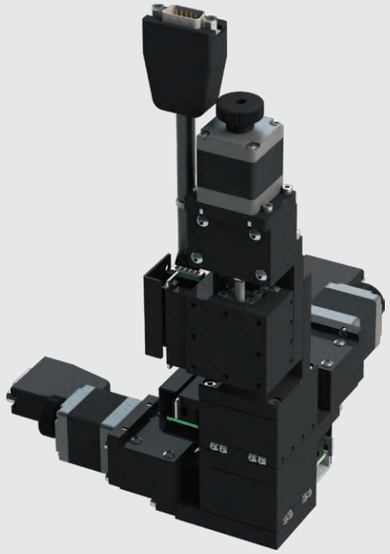

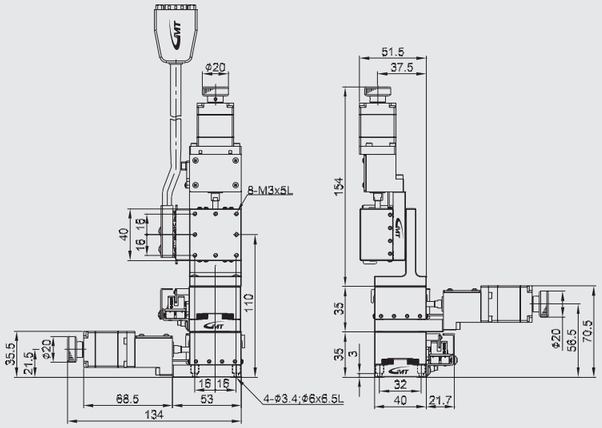

AXYZ60-A2PL-CD

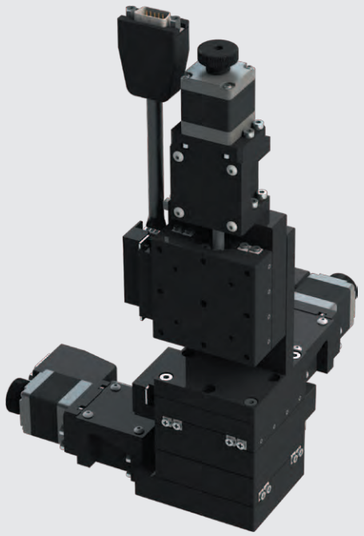

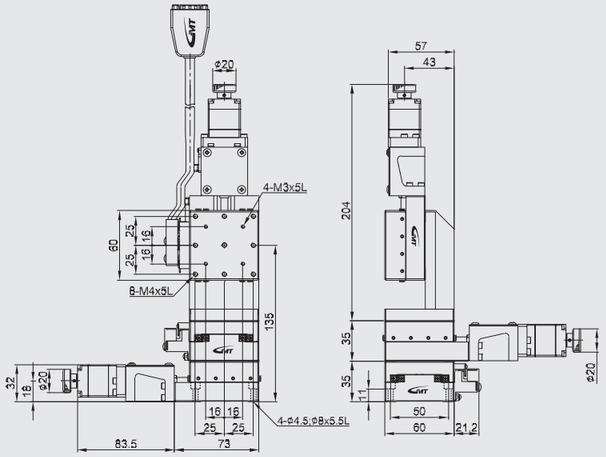

AXYZ80-A2PL-CD

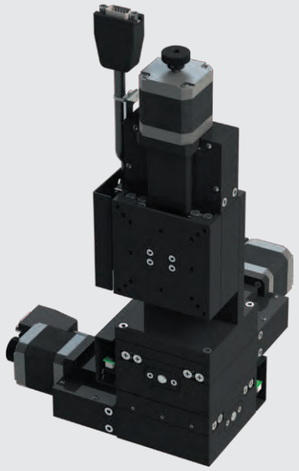

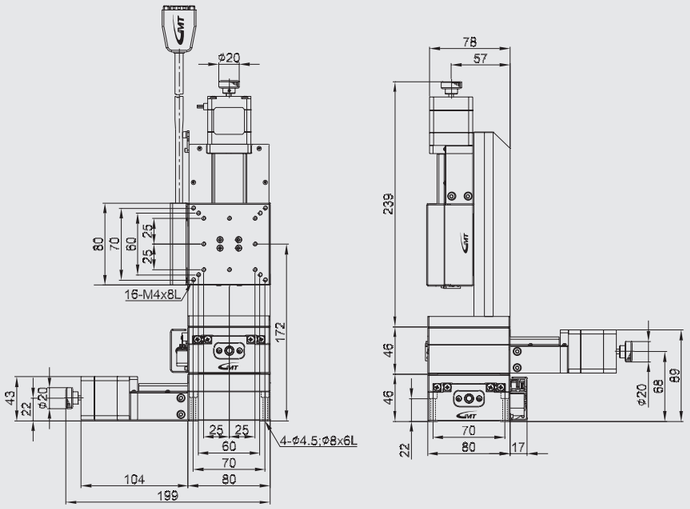

AXYZ100-A2PL-CD

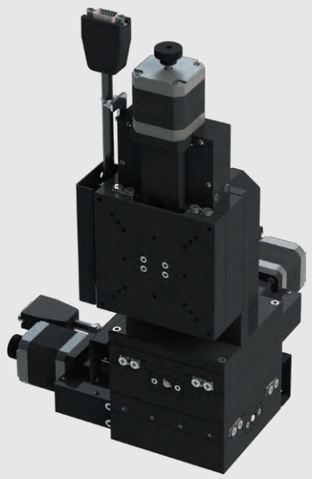

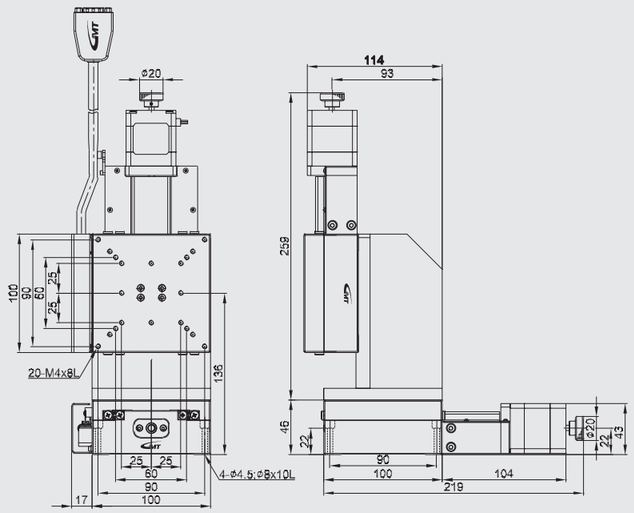

AXYZ120-A2PL-CD

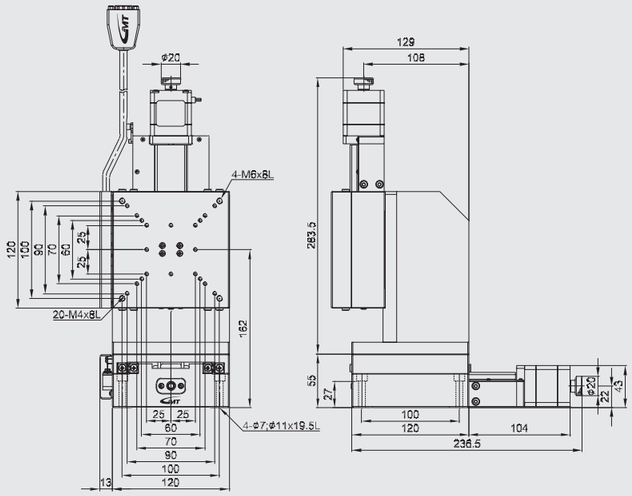

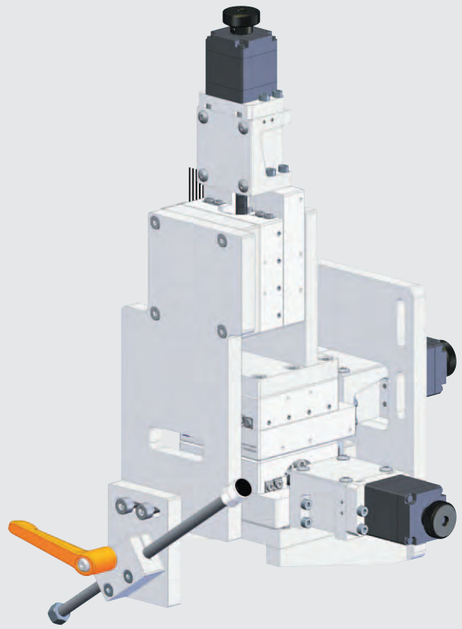

AXL series

Model description

Material	Drive type	Accuracy level	Wiring method	Motor model	Connector type
A Aluminum alloy	2 Ball screw	P Precision grade	R Right wiring L Left wiring	C 5-phase stepper X Not equipped	D D-SUB15 (VGA)

AXL 40 15 - A 2 P R - C D - 2 C

Axis & serial numbers	Table size	Travel stroke	Connecting cable (optional)	Driver (optional)
AXL X axis	40 40*40mm 60 60*60mm 80 80*80mm 100 100*100mm 120 120*120mm	15 15mm 20 20mm 30 30mm 40 40mm 50 50mm	Blank Not equipped 2 2m cable*1 4 4m cable*1 6 6m cable*1	Blank Not equipped C Standard specified by GMT

*1 (D-SUB 15 pin female connector + the other side with discrete wirings)

Model Number			AXL4015-A2PR-CD	AXL6020-A2PR-CD	AXL8030-A2PR-CD	AXL10040-A2PR-CD	AXL12050-A2PR-CD
Mechanical specifications	Table size		40X40 mm	60X60 mm	80X80 mm	100X100 mm	120X120 mm
	Travel stroke		15 mm	20 mm	30 mm	40 mm	50 mm
	Drive type		Ball screw Ø6 lead 1mm				
	Rail		Crossed-roller guiding				
	Stage material/Surface treatment		Aluminum alloy / Black anodized				
	Main unit weight		0.23 Kg	0.4 Kg	0.7 Kg	1.3 Kg	2.3 Kg
	Coupling		FAMCS10-5*5				
	Accuracy level		P：Precision grade				
	Wiring method		R：Right wiring				
Precision specifications	Resolution (pulse)	Full / Half	2 μm / 1 μm				
	Maximum speed (full step)		10 mm / sec				
	Positioning precision		5 μm				10 μm
	Repeatability precision		±0.5 μm				
	Load capacity		4 Kgf	5 Kgf	7 Kgf	10 Kgf	15 Kgf
	Missed step		1 μm				
	Parallelism		20 μm				
	Dynamic straightness		2 μm				
	Dynamic parallelism		6.6 μm			10 μm	
Electrical specifications	Motor	Type/Shaft numbers	5-phase stepper / □28 double shafts				
		Brand/ Model	Sanyo / SH5281-7211				
	Driver brand/Model		Please refer to motor / driver cross-reference table (page E3)				
	Connector	Stage side connector	15-pin male end connector D-SUB				
		Controller side connector	15-pin female end connector D-SUB (optional)				
	Sensor	Origin sensor	Photoelectric sensor EE-SX4134				
		Limit sensor					
		Origin approximation sensor					
		Power voltage	24V±10%				
		Control output	NPN open collector output under 24V 8mA				
		Output control	Testing (sensing)：output transistor OFF (closed)				

X axis

AXL4015-A2PR-CD

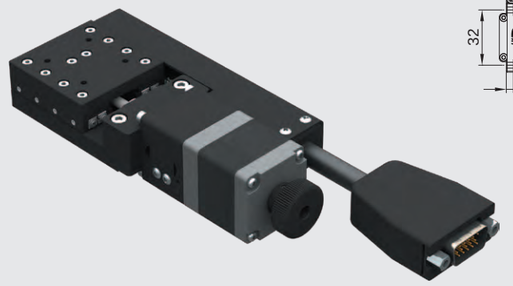

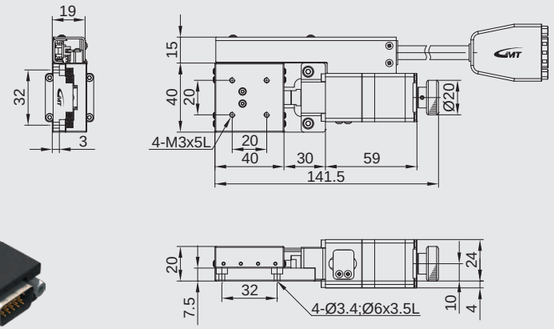

AXL6020-A2PR-CD

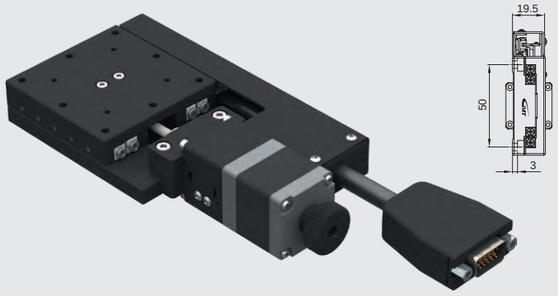

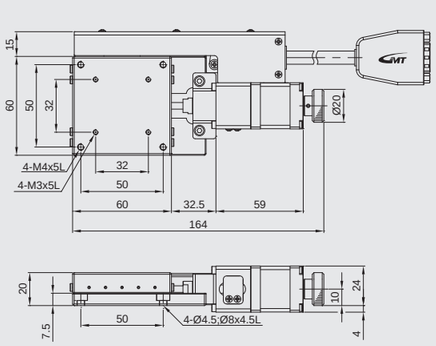

AXL8030-A2PR-CD

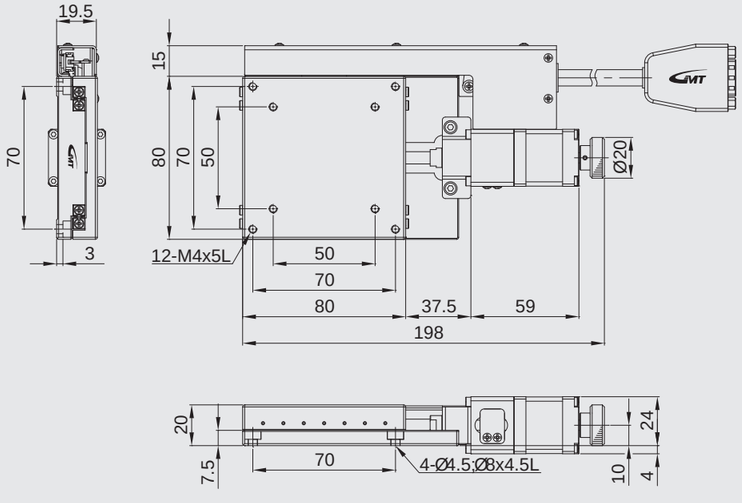

AXL10040-A2PR-CD

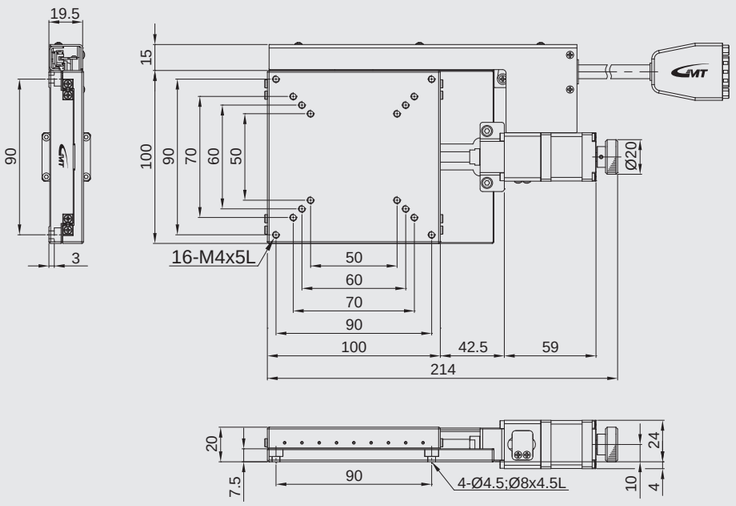

AXL12050-A2PR-CD

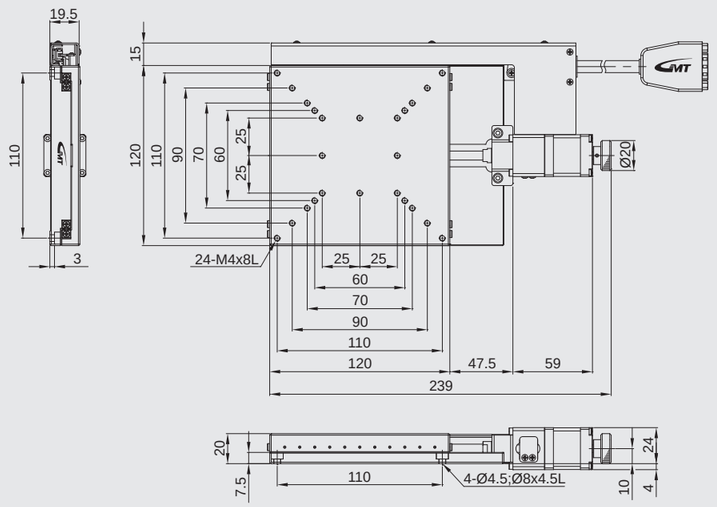

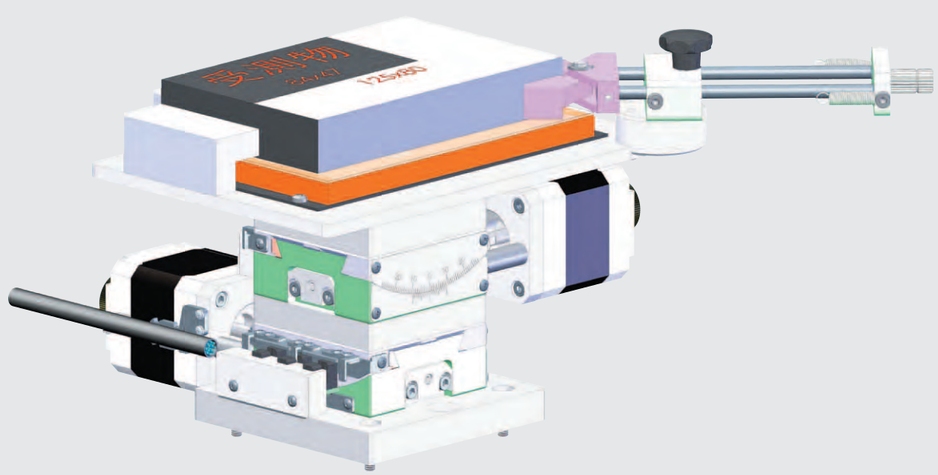

AYL series

Model description

Material	Drive type	Accuracy level	Wiring method	Motor model	Connector type
A Aluminum alloy	2 Ball screw	P Precision grade	R Right wiring L Left wiring	C 5-phase stepper X Not equipped	D D-SUB15 (VGA)

AYL 40 15 - A 2 P R - C D - 2 C

Axis & serial numbers	Table size	Travel stroke	Connecting cable (optional)	Driver (optional)
AYL XY axis	40 40*40mm 60 60*60mm 80 80*80mm 100 100*100mm 120 120*120mm	15 15mm 20 20mm 30 30mm 40 40mm 50 50mm	Blank Not equipped 2 2m cable*1 4 4m cable*1 6 6m cable*1	Blank Not equipped C Standard specified by GMT

*1 (D-SUB 15 pin female connector + the other side with discrete wirings)

Model Number			AYL4015-A2PR-CD	AYL6020-A2PR-CD	AYL8030-A2PR-CD	AYL10040-A2PR-CD	AYL12050-A2PR-CD
Mechanical specifications	Table size		40X40 mm	60X60 mm	80X80 mm	100X100 mm	120X120 mm
	Travel stroke		15 mm	20 mm	30 mm	40 mm	50 mm
	Drive type		Ball screw Ø6 lead 1mm				
	Rail		Crossed-roller guiding				
	Stage material/Surface treatment		Aluminum alloy / Black anodized				
	Main unit weight		0.46 Kg	0.8 Kg	1.4 Kg	2.6 Kg	4.6 Kg
	Coupling		FAMCS10-5*5				
	Accuracy level		P：Precision grade				
	Wiring method		R：Right wiring				
Precision specifications	Resolution (pulse)	Full / Half	2 μm / 1 μm				
	Maximum speed (full step)		10 mm / sec				
	Positioning precision		5 μm				10 μm
	Repeatability precision		±0.5 μm				
	Load capacity		3.5 Kgf	4.5 Kgf	6.5 Kgf	9.5 Kgf	14.5 Kgf
	Missed step		1 μm				
	Parallelism		20 μm				
	Dynamic straightness		2 μm				
	Dynamic parallelism		6.6 μm		10 μm		
Electrical specifications	Motor	Type/Shaft numbers	5-phase stepper / □28 double shafts				
		Brand/ Model	Sanyo / SH5281-7211				
	Driver brand/Model		Please refer to motor / driver cross-reference table (page E3)				
	Connector	Stage side connector	15-pin male end connector D-SUB				
		Controller side connector	15-pin female end connector D-SUB (optional)				
	Sensor	Origin sensor	Photoelectric sensor EE-SX4134				
		Limit sensor					
		Origin approximation sensor					
		Power voltage	24V±10%				
		Control output	NPN open collector output under 24V 8mA				
		Output control	Testing (sensing)：output transistor OFF (closed)				

XY axis

AYL4015-A2PR-CD

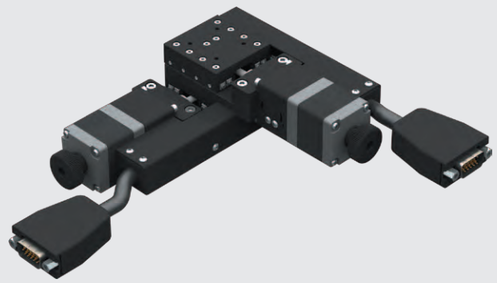

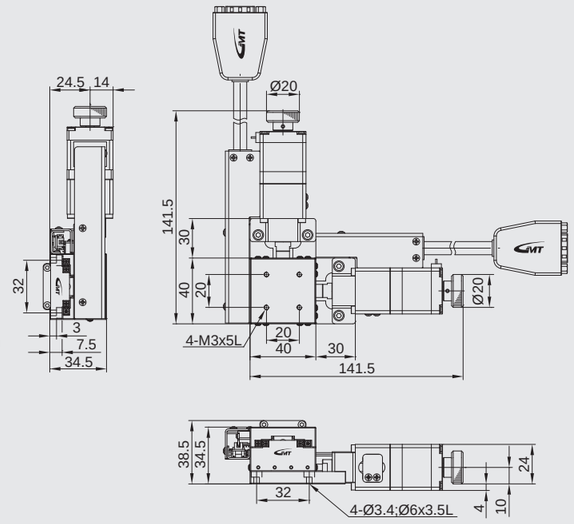

AYL6020-A2PR-CD

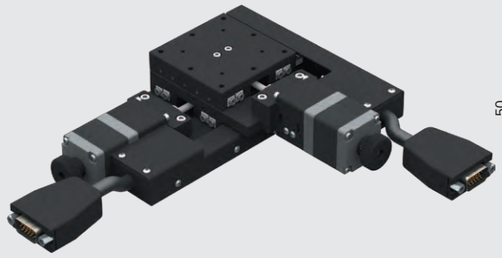

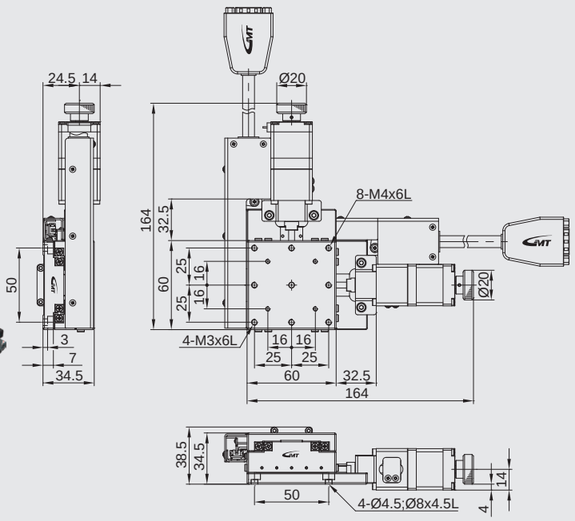

AYL8030-A2PR-CD

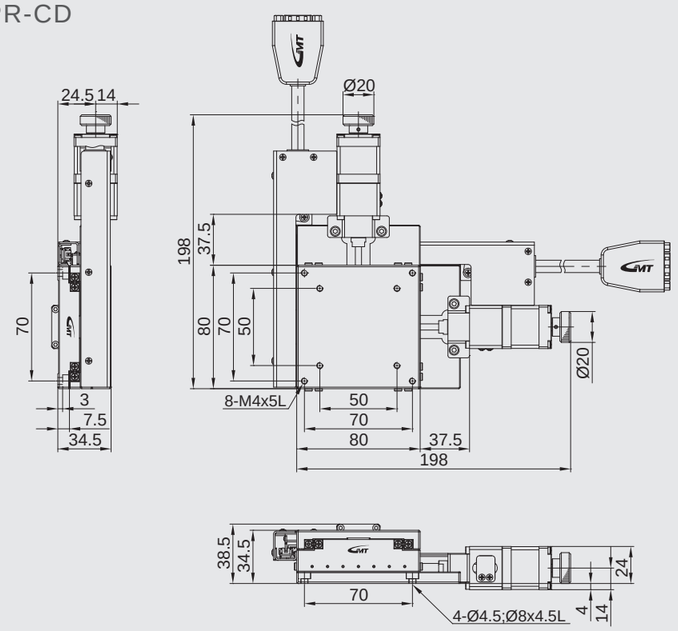

AYL10040-A2PR-CD

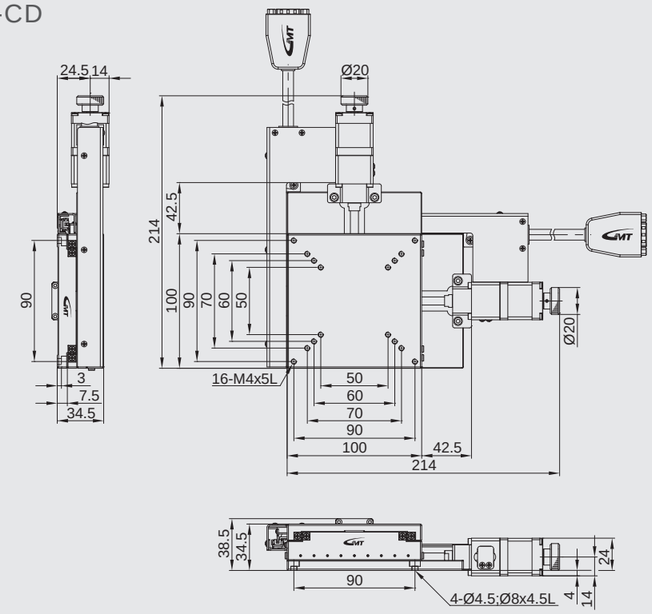

AYL12050-A2PR-CD

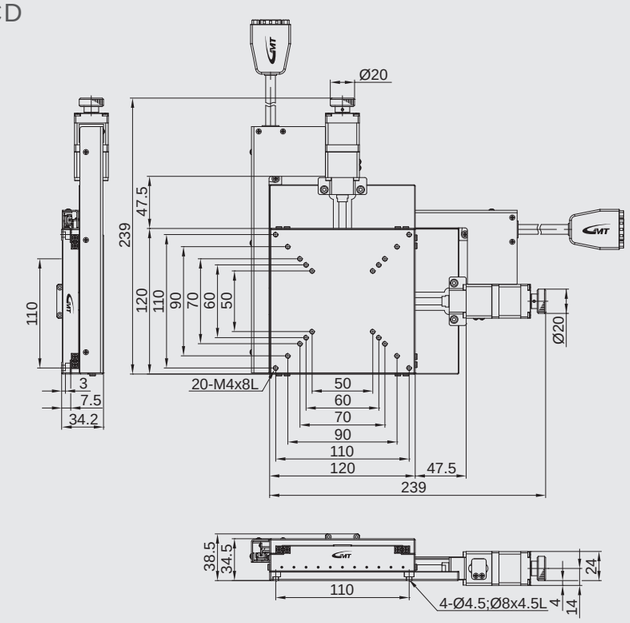

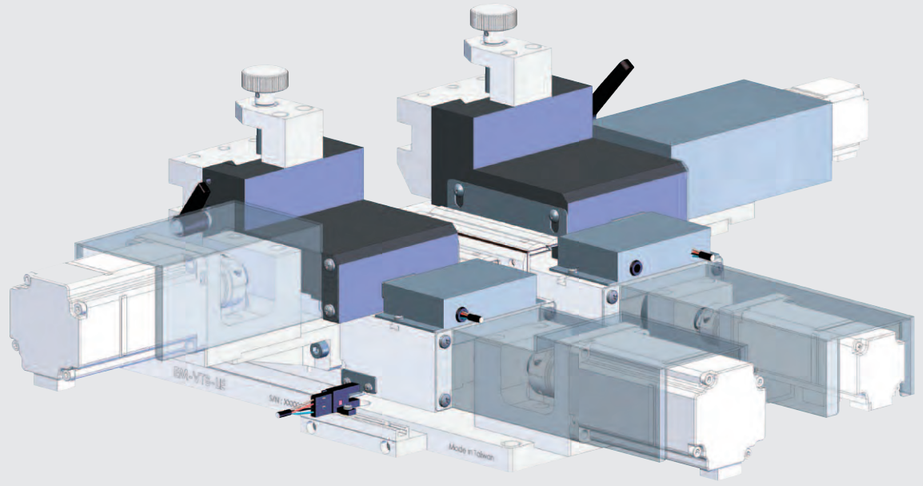

AXC series

Model description

Material	Drive type	Accuracy level	Wiring method	Motor model	Connector type
A Aluminum alloy	2 Ball screw	P Precision grade	R Right wiring L Left wiring	C 5-phase stepper X Not equipped	D D-SUB15 (VGA)

AXC 60 20 - A 2 P R - C D - 2 C

Axis & serial numbers	Table size	Travel stroke	Connecting cable (optional)	Driver (optional)
AXC X axis	60 60*60mm 80 80*80mm 100 100*100mm 120 120*120mm	20 20mm 30 30mm 40 40mm 50 50mm	Blank Not equipped 2 2m cable*1 4 4m cable*1 6 6m cable*1	Blank Not equipped C Standard specified by GMT

*1 (D-SUB 15 pin female connector + the other side with discrete wirings)

Model Number			AXC6020-A2PR-CD	AXC8030-A2PR-CD	AXC10040-A2PR-CD	AXC12050-A2PR-CD
Mechanical specifications	Table size		60X60 mm	80X80 mm	100X100 mm	120X120 mm
	Travel stroke		20 mm	30 mm	40 mm	50 mm
	Drive type		Ball screw Ø6 lead 1mm			
	Rail		Crossed-roller guiding			
	Stage material/Surface treatment		Aluminum alloy / Black anodized			
	Main unit weight		0.44 Kg	0.77 Kg	1.34 Kg	2.33 Kg
	Coupling		FAMCS13-5*5			
	Accuracy level		P：Precision grade			
	Wiring method		R：Right wiring			
Precision specifications	Resolution (pulse)	Full / Half	2 μm / 1 μm			
	Maximum speed (full step)		10 mm / sec			
	Positioning precision		5 μm			10 μm
	Repeatability precision		±0.5 μm			
	Load capacity		5 Kgf	7 Kgf	10 Kgf	15 Kgf
	Missed step		1 μm			
	Parallelism		20 μm			
	Dynamic straightness		2 μm			
	Dynamic parallelism		6.6 μm	10 μm		
Electrical specifications	Motor	Type/Shaft numbers	5-phase stepper / □28 double shafts			
		Brand/ Model	Sanyo / SH5281-7211			
	Driver brand/Model		Please refer to motor / driver cross-reference table (page E3)			
	Connector	Stage side connector	15-pin male end connector D-SUB			
		Controller side connector	15-pin female end connector D-SUB (optional)			
	Sensor	Origin sensor	Photoelectric sensor EE-SX4134			
		Limit sensor				
		Origin approximation sensor				
		Power voltage	24V±10%			
		Control output	NPN open collector output under 24V 8mA			
		Output control	Testing (sensing)：output transistor OFF (closed)			

X axis

AXC6020-A2PR-CD

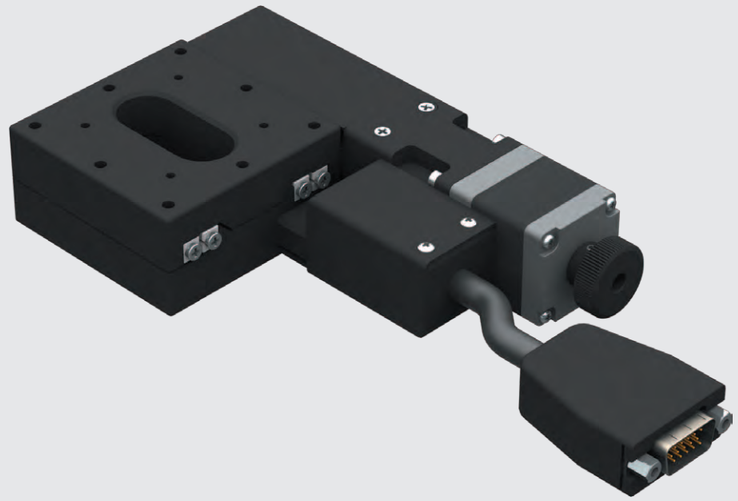

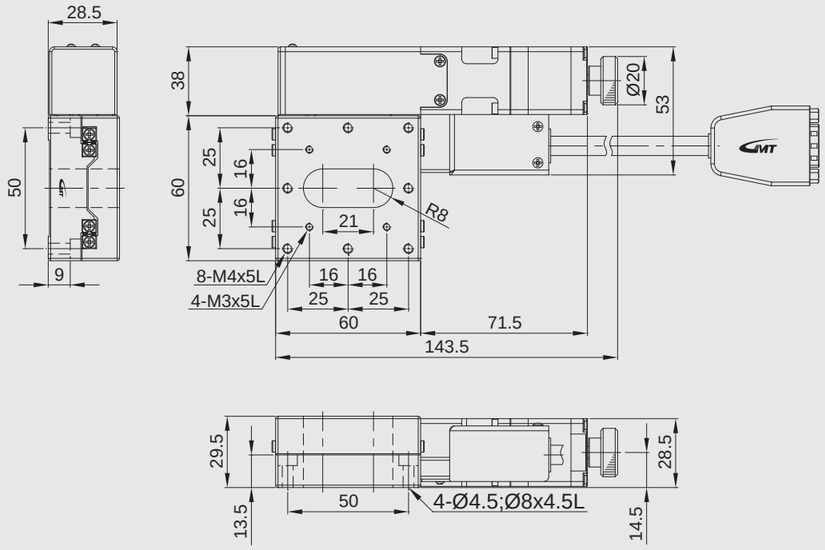

AXC8030-A2PR-CD

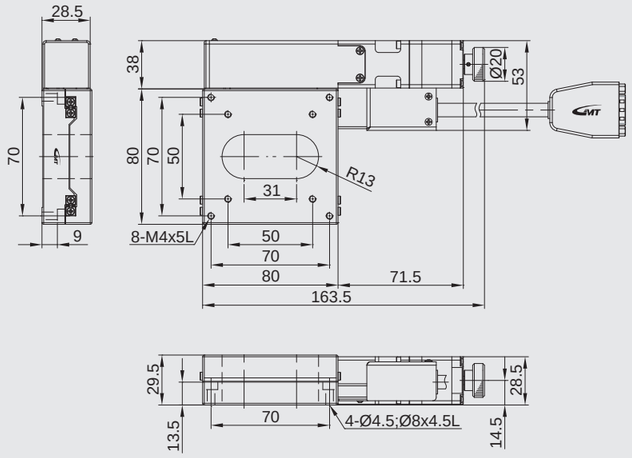

AXC10040-A2PR-CD

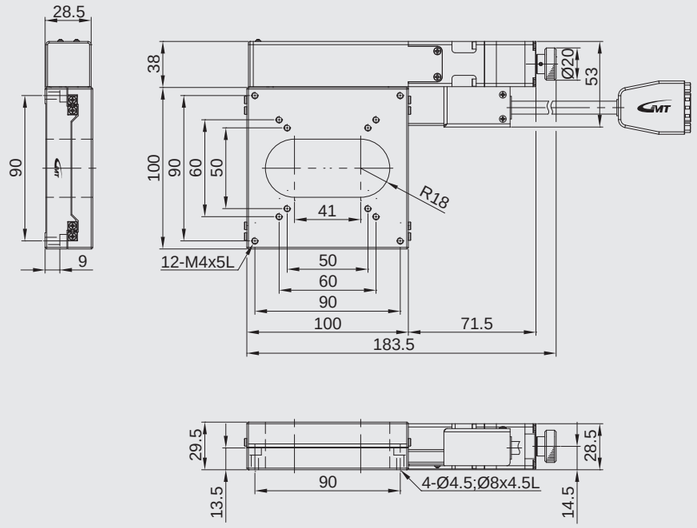

AXC12050-A2PR-CD

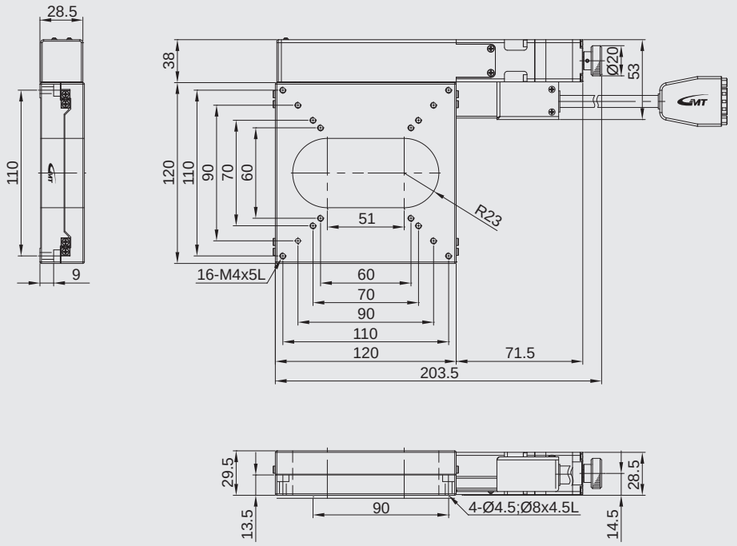

AYC series

Model description

Material	Drive type	Accuracy level	Wiring method	Motor model	Connector type
A Aluminum alloy	2 Ball screw	P Precision grade	R Right wiring L Left wiring	C 5-phase stepper X Not equipped	D D-SUB15 (VGA)

AYC 60 20 - A 2 P R - C D - 2 C

Axis & serial numbers	Table size	Travel stroke	Connecting cable (optional)	Driver (optional)
AYC XY axis	60 60*60mm 80 80*80mm 100 100*100mm 120 120*120mm	20 20mm 30 30mm 40 40mm 50 50mm	Blank Not equipped 2 2m cable*1 4 4m cable*1 6 6m cable*1	Blank Not equipped C Standard specified by GMT

*1 (D-SUB 15 pin female connector + the other side with discrete wirings)

Model Number			AYC6020-A2PR-CD	AYC8030-A2PR-CD	AYC10040-A2PR-CD	AYC12050-A2PR-CD
Mechanical specifications	Table size		60X60 mm	80X80 mm	100X100 mm	120X120 mm
	Travel stroke		20 mm	30 mm	40 mm	50 mm
	Drive type		Ball screw Ø6 lead 1mm			
	Rail		Crossed-roller guiding			
	Stage material/Surface treatment		Aluminum alloy / Black anodized			
	Main unit weight		1.0 Kg	1.74 Kg	3.05 Kg	5.25 Kg
	Coupling		FAMCS13-5*5			
	Accuracy level		P：Precision grade			
	Wiring method		R：Right wiring			
Precision specifications	Resolution (pulse)	Full / Half	2 μm / 1 μm			
	Maximum speed (full step)		10 mm / sec			
	Positioning precision		5 μm			10 μm
	Repeatability precision		±0.5 μm			
	Load capacity		4.5 Kgf	6.5 Kgf	9.5 Kgf	14.5 Kgf
	Missed step		1 μm			
	Parallelism		20 μm			
	Dynamic straightness		2 μm			
	Dynamic parallelism		6.6 μm	10 μm		
Electrical specifications	Motor	Type/Shaft numbers	5-phase stepper / □28 double shafts			
		Brand/ Model	Sanyo / SH5281-7211			
	Driver brand/Model		Please refer to motor / driver cross-reference table (page E3)			
	Connector	Stage side connector	15-pin male end connector D-SUB			
		Controller side connector	15-pin female end connector D-SUB (optional)			
	Sensor	Origin sensor	Photoelectric sensor EE-SX4134			
		Limit sensor				
		Origin approximation sensor				
		Power voltage	24V±10%			
		Control output	NPN open collector output under 24V 8mA			
		Output control	Testing (sensing)：output transistor OFF (closed)			

XY axis

AYC6020-A2PR-CD

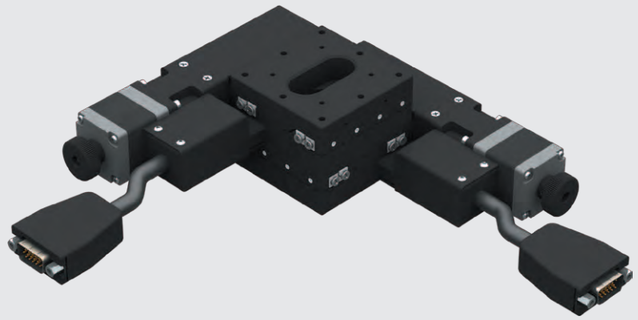

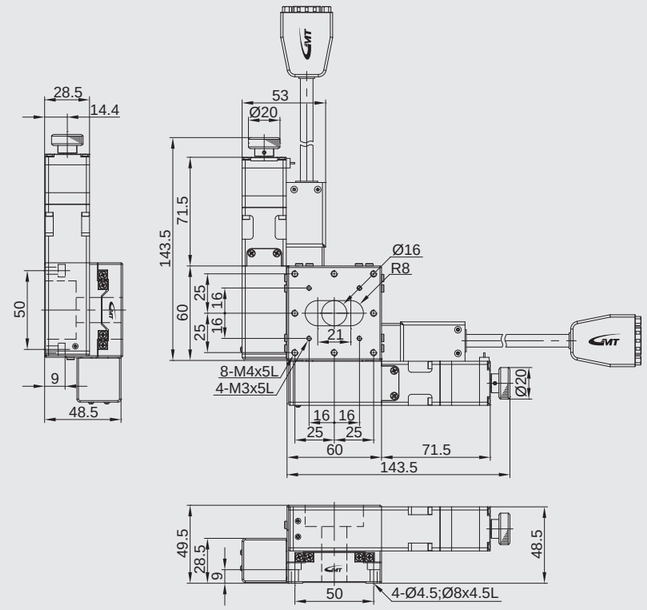

AYC8030-A2PR-CD

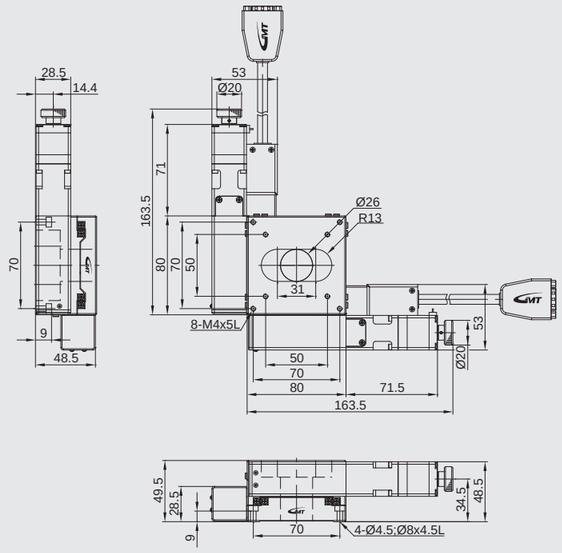

AYC10040-A2PR-CD

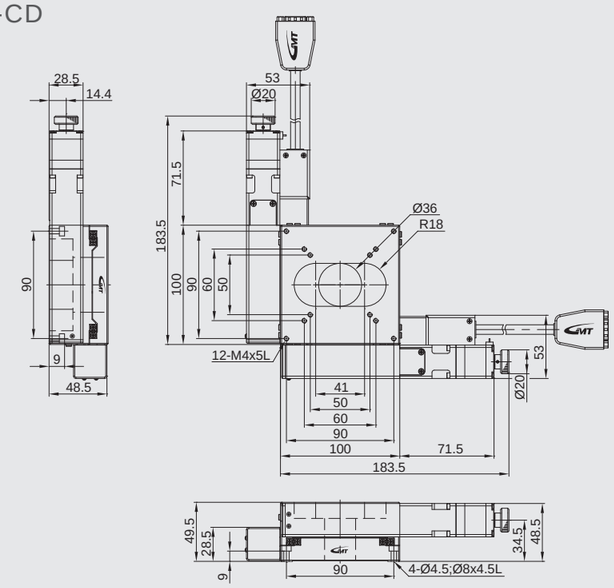

AYC12050-A2PR-CD

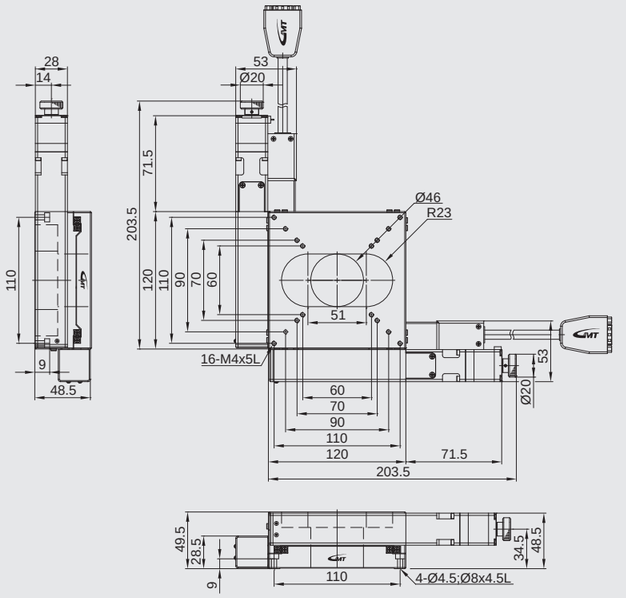

AXW series

Model description

Material	Drive type	Accuracy level	Wiring method	Motor model	Connector type
F Carbon steel	2 Ball screw	P Precision grade	L Left wiring R Right wiring	C 5-phase stepper X Not equipped	D D-SUB15 (VGA)

AXW 80 30 - F 2 P L - C D - 2 C

Axis & serial numbers	Table size	Travel stroke	Connecting cable (optional)	Driver (optional)
AXW X axis	80 80*80mm 100 100*100mm 120 120*120mm	30 30mm 40 40mm 50 50mm	Blank Not equipped 2 2m cable*1 4 4m cable*1 6 6m cable*1	Blank Not equipped C Standard specified by GMT

*1 (D-SUB 15 pin female connector + the other side with discrete wirings)

	Model Number	AXW8030-F2PL-CD	AXW10040-F2PL-CD	AXW12050-F2PL-CD
Mechanical specifications	Table size	80X80 mm	100X100 mm	120X120 mm
	Travel stroke	30 mm	40 mm	50 mm
	Drive type	Ball screw Ø8 lead 1mm		
	Rail	Crossed-roller guiding		
	Stage material/Surface treatment	Carbon steel / Electroless nickel plating		
	Main unit weight	2.8 Kg	4.8 Kg	8.4 Kg
	Coupling	FAMCS16-5*5		
	Accuracy level	P：Precision grade		
	Wiring method	L：Left wiring*2		
Precision specifications	Resolution (pulse) Full / Half	2 μm / 1 μm		
	Maximum speed (full step)	10 mm / sec		
	Positioning precision	5 μm		10 μm
	Repeatability precision	±0.5 μm		
	Load capacity	50 Kgf	60 Kgf	70 Kgf
	Missed step	1 μm		
	Parallelism	20 μm		
	Dynamic straightness	2 μm		
	Dynamic parallelism	10 μm		
Electrical specifications	Motor Type/Shaft numbers	5-phase stepper / □42 double shafts		
	Motor Brand/ Model	Sanyo / 103F5510-8211		
	Driver brand/Model	Please refer to motor / driver cross-reference table (page E3)		
	Connector Stage side connector	15-pin male end connector D-SUB		
	Connector Controller side connector	15-pin female end connector D-SUB (optional)		
	Sensor	Photoelectric sensor EE-SX4134		
	Power voltage	24V±10%		
	Control output	NPN open collector output under 24V 8mA		
	Output control	Testing (sensing)：output transistor OFF (closed)		

*2 Left wiring of this model is defined to regard the motor structure assembled on the stage mechanical left side.

X axis

AXW8030-F2PL-CD

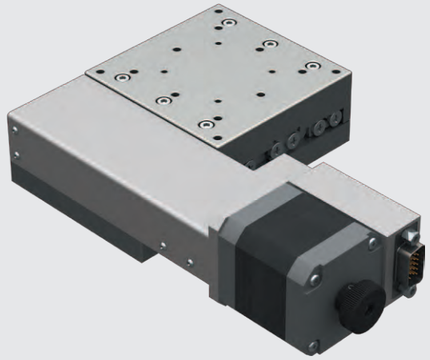

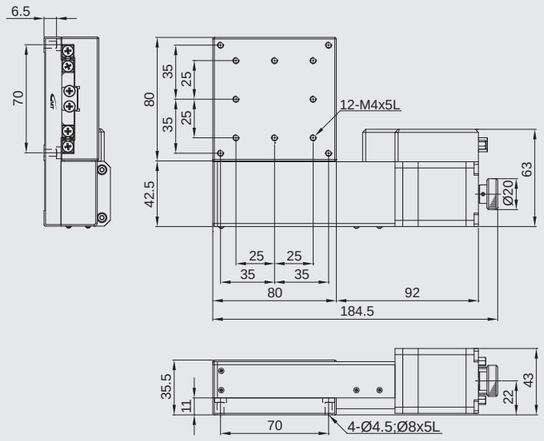

AXW10040-F2PL-CD

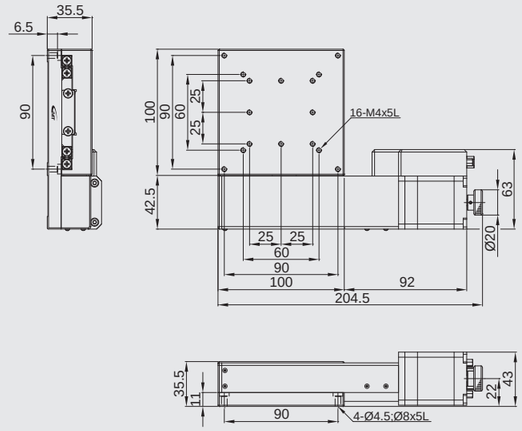

AXW12050-F2PL-CD

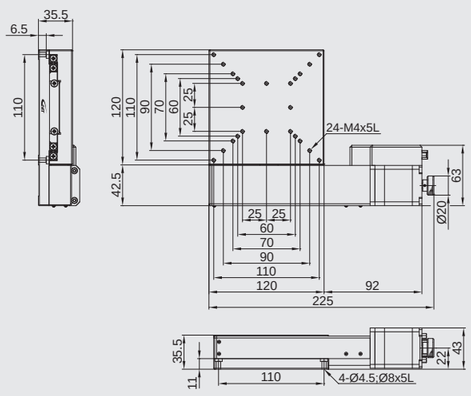

AYW series

Model description

Material	Drive type	Accuracy level	Wiring method	Motor model	Connector type
F Carbon steel	2 Ball screw	P Precision grade	N GMT Standard	C 5-phase stepper X Not equipped	D D-SUB15 (VGA)

AYW 80 30 - F 2 P N - C D - 2 C

Axis & serial numbers	
AYW	XY axis

Table size	
80	80*80mm
100	100*100mm
120	120*120mm

Travel stroke	
30	30mm
40	40mm
50	50mm

Connecting cable (optional)	
Blank	Not equipped
2	2m cable*1
4	4m cable*1
6	6m cable*1

*1 (D-SUB 15 pin female connector + the other side with discrete wirings)

Driver (optional)	
Blank	Not equipped
C	Standard specified by GMT

Model Number			AYW8030-F2PN-CD	AYW10040-F2PN-CD	AYW12050-F2PN-CD
Mechanical specifications	Table size		80X80 mm	100X100 mm	120X120 mm
	Travel stroke		30 mm	40 mm	50 mm
	Drive type		Ball screw Ø8 lead 1mm		
	Rail		Crossed-roller guiding		
	Stage material/Surface treatment		Carbon steel / Electroless nickel plating		
	Main unit weight		5.6 Kg	9.6 Kg	16.8 Kg
	Coupling		FAMCS16-5*5		
	Accuracy level		P : Precision grade		
	Wiring method		N : GMT Standard*2		
Precision specifications	Resolution (pulse)	Full / Half	2 μm / 1 μm		
	Maximum speed (full step)		10 mm / sec		
	Positioning precision		5 μm		10 μm
	Repeatability precision		±0.5 μm		
	Load capacity		45 Kgf	55 Kgf	65 Kgf
	Missed step		1 μm		
	Parallelism		20 μm		
	Dynamic straightness		2 μm		
	Dynamic parallelism		10 μm		
Electrical specifications	Motor	Type/Shaft numbers	5-phase stepper / □42 double shafts		
		Brand/ Model	Sanyo / 103F5510-8211		
	Driver brand/Model		Please refer to motor / driver cross-reference table (page E3)		
	Connector	Stage side connector	15-pin male end connector D-SUB		
		Controller side connector	15-pin female end connector D-SUB (optional)		
	Sensor	Origin sensor	Photoelectric sensor EE-SX4134		
		Limit sensor			
		Origin approximation sensor			
		Power voltage	24V±10%		
		Control output	NPN open collector output under 24V 8mA		
		Output control	Testing (sensing) : output transistor OFF (closed)		

*2 GMT Standard wiring is defined as the product photo, and not optional available.

XY axis

AYW8030-F2PN-CD

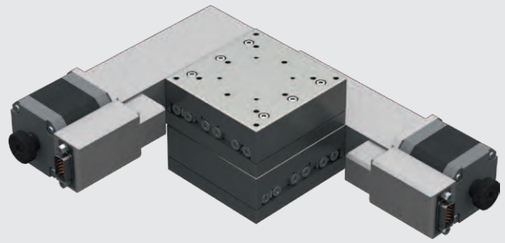

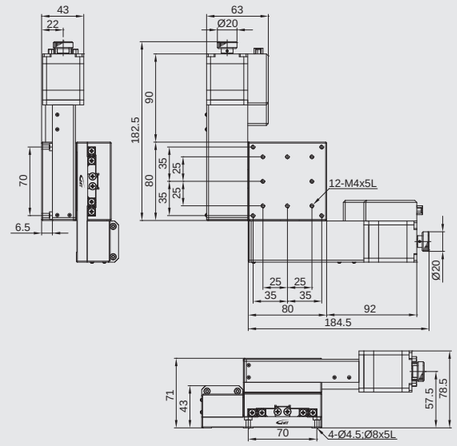

AYW10040-F2PN-CD

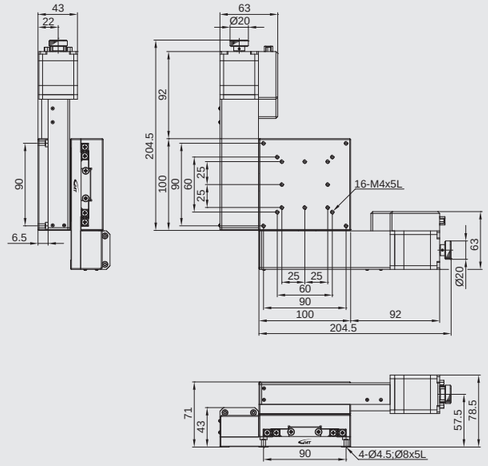

AYW12050-F2PN-CD

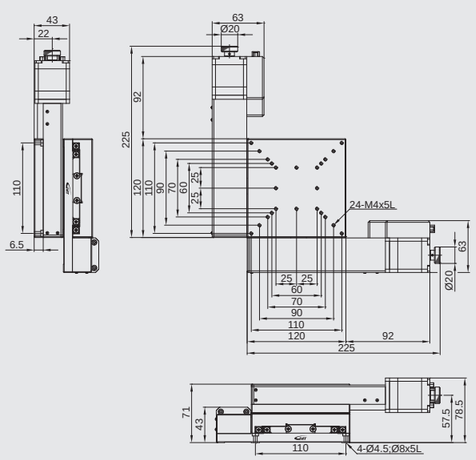

CXS50□ series

Model description

Material	Drive type	Accuracy level	Wiring method	Motor model	Connector type
S Stainless steel	2 Ball screw	P Precision grade	N GMT Standard	C 5-phase stepper X Not equipped	D D-SUB15 (VGA)

CXS 50 20 - S 2 P N - C D - 2 C

Axis & serial numbers	Table size	Travel stroke	Connecting cable (optional)	Driver (optional)
CXS X axis	50 50*50mm	20 20mm 30 30mm	Blank Not equipped 2 2m cable*1 4 4m cable*1 6 6m cable*1	Blank Not equipped C Standard specified by GMT

*1 (D-SUB 15 pin female connector + the other side with discrete wirings)

Model Number			CXS5020-S2PN-CD	CXS5030-S2PN-CD
Mechanical specifications		Table size	50X50 mm	
		Travel stroke	20 mm	30 mm
		Drive type	Ball screw Ø8 lead 1mm	
		Rail	Linear ball guiding	
		Stage material/Surface treatment	Stainless steel / Electroless nickel plating	
		Main unit weight	0.57 Kg	0.72 Kg
		Coupling	FAMCS10-5*5	
		Accuracy level	P : Precision grade	
		Wiring method	N : GMT Standard*2	
Precision specifications		Resolution (pulse) Full / Half	2 μm / 1 μm	
		Maximum speed (full step)	20 mm / sec	
		Positioning precision	5 μm	
		Repeatability precision	±0.5 μm	
		Load capacity	6 Kgf	
		Missed step	1 μm	
		Parallelism	15 μm	
		Dynamic straightness	2 μm	
		Dynamic parallelism	10 μm	
Electrical specifications	Motor	Type/Shaft numbers	5-phase stepper / □28 double shafts	
		Brand/ Model	Sanyo / SH5281-7211	
	Driver brand/Model		Please refer to motor / driver cross-reference table (page E3)	
	Connector	Stage side connector	15-pin male end connector D-SUB	
		Controller side connector	15-pin female end connector D-SUB (optional)	
	Sensor	Origin sensor	Photoelectric sensor EE-SX4134	
		Limit sensor		
		Origin approximation sensor	N / A	
		Power voltage	24V±10%	
		Control output	NPN open collector output under 24V 8mA	
		Output control	Testing (sensing) : output transistor OFF (closed)	

*2 GMT Standard wiring is defined as the product photo, and not optional available.

X axis

CXS50□-S2PN-CD

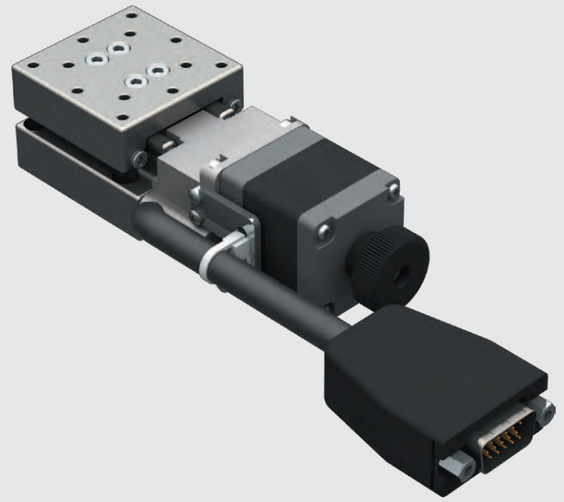

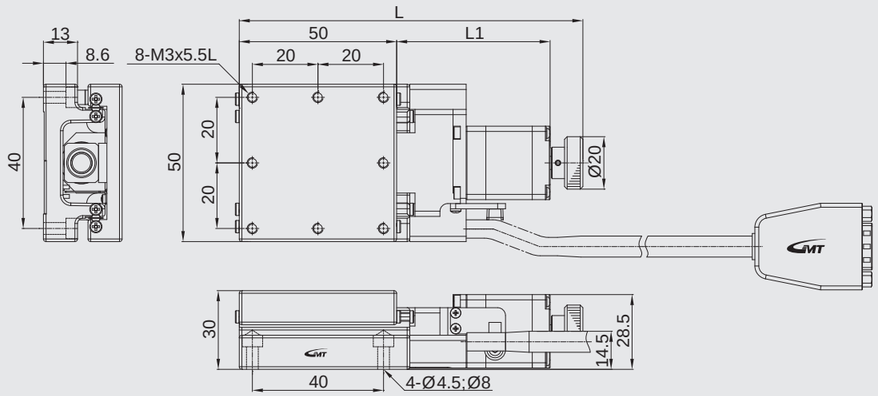

Stroke / Table size	20		30	
	L	L1	L	L1
50	134	70.5	144	80.5

CXS60□ series

Model description

Material	Drive type	Accuracy level	Wiring method	Motor model	Connector type
S Stainless steel	2 Ball screw	P Precision grade	N GMT Standard	C 5-phase stepper X Not equipped	D D-SUB15 (VGA)

CXS 60 20 - S 2 P N - C D - 2 C

Axis & serial numbers	Table size	Travel stroke	Connecting cable (optional)	Driver (optional)
CXS X axis	60 60*60mm 60 60*60mm 60 60*80mm	20 20mm 30 30mm 50 50mm	Blank Not equipped 2 2m cable*1 4 4m cable*1 6 6m cable*1	Blank Not equipped C Standard specified by GMT

*1 (D-SUB 15 pin female connector + the other side with discrete wirings)

Model Number			CXS6020-S2PN-CD	CXS6030-S2PN-CD	CXS6050-S2PN-CD
Mechanical specifications	Table size		60X60 mm		60X80 mm
	Travel stroke		20 mm	30 mm	50 mm
	Drive type		Ball screw Ø8 lead 1mm		
	Rail		Linear ball guiding		
	Stage material/Surface treatment		Stainless steel / Electroless nickel plating		
	Main unit weight		0.75 Kg	0.8 Kg	1.11 Kg
	Coupling		FAMCS10-5*5		
	Accuracy level		P：Precision grade		
	Wiring method		N：GMT Standard*2		
Precision specifications	Resolution (pulse)	Full / Half	2 μm / 1 μm		
	Maximum speed (full step)		20 mm / sec		
	Positioning precision		5 μm		
	Repeatability precision		±0.5 μm		
	Load capacity		7 Kgf		
	Missed step		1 μm		
	Parallelism		20 μm		
	Dynamic straightness		2 μm		
	Dynamic parallelism		10 μm		
Electrical specifications	Motor	Type/Shaft numbers	5-phase stepper / □28 double shafts		
		Brand/ Model	Sanyo / SH5281-7211		
	Driver brand/Model		Please refer to motor / driver cross-reference table (page E3)		
	Connector	Stage side connector	15-pin male end connector D-SUB		
		Controller side connector	15-pin female end connector D-SUB (optional)		
	Sensor	Origin sensor	Photoelectric sensor EE-SX4134		
		Limit sensor			
		Origin approximation sensor	N / A		
		Power voltage	24V±10%		
		Control output	NPN open collector output under 24V 8mA		
		Output control	Testing (sensing)：output transistor OFF (closed)		

*2 GMT Standard wiring is defined as the product photo, and not optional available.

X axis

CXS60□-S2PN-CD

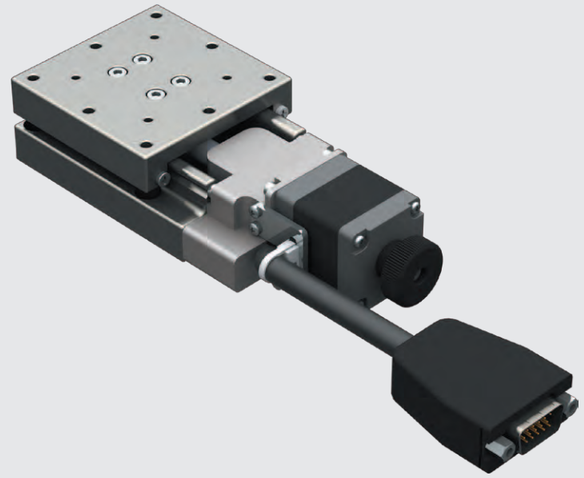

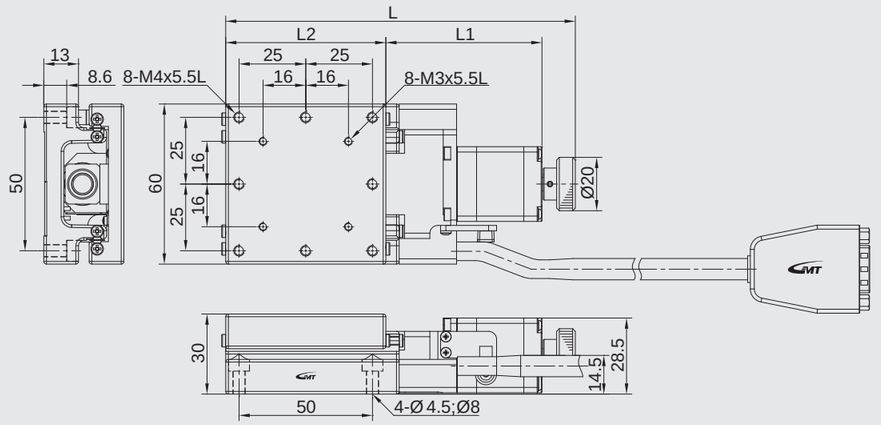

Stroke / Table size	20			30			50		
	L	L1	L2	L	L1	L2	L	L1	L2
60	131	58.5	60	141	68.5	60	194	101.5	80

CXS80□ series

Model description

Material	Drive type	Accuracy level	Wiring method	Motor model	Connector type
S Stainless steel	2 Ball screw	P Precision grade	N GMT Standard	C 5-phase stepper X Not equipped	D D-SUB15 (VGA)

CXS 80 20 - S 2 P N - C D - 2 C

Axis & serial numbers	Table size	Travel stroke	Connecting cable (optional)	Driver (optional)
CXS X axis	80 80*80mm 80 80*80mm 80 80*100mm	20 20mm 30 30mm 50 50mm	Blank Not equipped 2 2m cable*1 4 4m cable*1 6 6m cable*1	Blank Not equipped C Standard specified by GMT

*1 (D-SUB 15 pin female connector + the other side with discrete wirings)

Model Number			CXS8020-S2PN-CD	CXS8030-S2PN-CD	CXS8050-S2PN-CD
Mechanical specifications	Table size		80X80 mm		80X100 mm
	Travel stroke		20 mm	30 mm	50 mm
	Drive type		Ball screw Ø8 lead 1mm		
	Rail		Linear ball guiding		
	Stage material/Surface treatment		Stainless steel / Electroless nickel plating		
	Main unit weight		1.15 Kg	1.2 Kg	1.35 Kg
	Coupling		FAMCS10-5*5		
	Accuracy level		P：Precision grade		
	Wiring method		N：GMT Standard*2		
Precision specifications	Resolution (pulse)	Full / Half	2 μm / 1 μm		
	Maximum speed (full step)		20 mm / sec		
	Positioning precision		5 μm		
	Repeatability precision		±0.5 μm		
	Load capacity		8 Kgf		
	Missed step		1 μm		
	Parallelism		20 μm		
	Dynamic straightness		2 μm		
	Dynamic parallelism		10 μm		
Electrical specifications	Motor	Type/Shaft numbers	5-phase stepper / □28 double shafts		
		Brand/ Model	Sanyo / SH5281-7211		
	Driver brand/Model		Please refer to motor / driver cross-reference table (page E3)		
	Connector	Stage side connector	15-pin male end connector D-SUB		
		Controller side connector	15-pin female end connector D-SUB (optional)		
	Sensor	Origin sensor	Photoelectric sensor EE-SX4134		
		Limit sensor			
		Origin approximation sensor	N / A		
		Power voltage	24V±10%		
		Control output	NPN open collector output under 24V 8mA		
		Output control	Testing (sensing)：output transistor OFF (closed)		

*2 GMT Standard wiring is defined as the product photo, and not optional available.

X axis

CXS80□-S2PN-CD

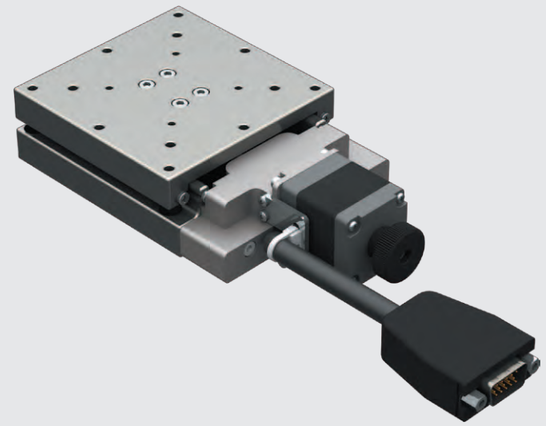

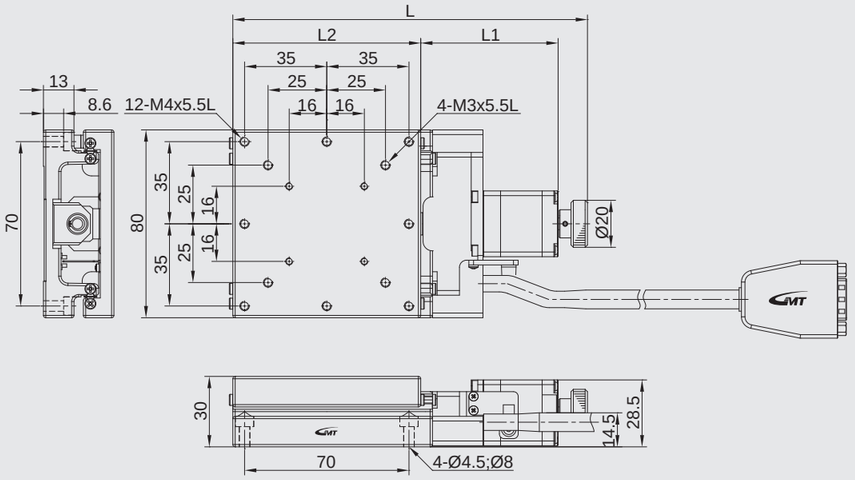

Stroke / Table size	20			30			50		
	L	L1	L2	L	L1	L2	L	L1	L2
80	151	58.5	80	161	68.5	80	194	101.5	100

CYS50□ series

Model description

Material	Drive type	Accuracy level	Wiring method	Motor model	Connector type
S Stainless steel	2 Ball screw	P Precision grade	N GMT Standard	C 5-phase stepper X Not equipped	D D-SUB15 (VGA)

CYS 50 20 - S 2 P N - C D - 2 C

Axis & serial numbers	Table size	Travel stroke	Connecting cable (optional)	Driver (optional)
CYS XY axis	50 50*50mm	20 20mm 30 30mm	Blank Not equipped 2 2m cable*1 4 4m cable*1 6 6m cable*1	Blank Not equipped C Standard specified by GMT

*1 (D-SUB 15 pin female connector + the other side with discrete wirings)

Model Number			CYS5020-S2PN-CD	CYS5030-S2PN-CD
Mechanical specifications		Table size	50X50 mm	
		Travel stroke	20 mm	30 mm
		Drive type	Ball screw Ø8 lead 1mm	
		Rail	Linear ball guiding	
		Stage material/Surface treatment	Stainless steel / Electroless nickel plating	
		Main unit weight	1.14 Kg	1.44 Kg
		Coupling	FAMCS10-5*5	
		Accuracy level	P：Precision grade	
		Wiring method	N：GMT Standard*2	
Precision specifications	Resolution (pulse)	Full / Half	2 μm / 1 μm	
		Maximum speed (full step)	20 mm / sec	
		Positioning precision	5 μm	
		Repeatability precision	±0.5 μm	
		Load capacity	5 Kgf	
		Missed step	1 μm	
		Parallelism	15 μm	
		Dynamic straightness	2 μm	
		Dynamic parallelism	10 μm	
Electrical specifications	Motor	Type/Shaft numbers	5-phase stepper / □28 double shafts	
		Brand/ Model	Sanyo / SH5281-7211	
	Driver brand/Model		Please refer to motor / driver cross-reference table (page E3)	
	Connector	Stage side connector	15-pin male end connector D-SUB	
		Controller side connector	15-pin female end connector D-SUB (optional)	
	Sensor	Origin sensor	Photoelectric sensor EE-SX4134	
		Limit sensor		
		Origin approximation sensor	N / A	
		Power voltage	24V±10%	
		Control output	NPN open collector output under 24V 8mA	
		Output control	Testing (sensing)：output transistor OFF (closed)	

*2 GMT Standard wiring is defined as the product photo, and not optional available.

XY axis

CYS50□-S2PN-CD

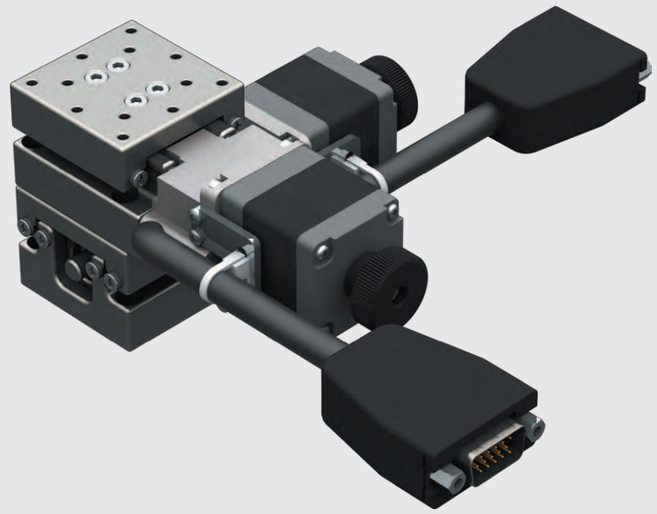

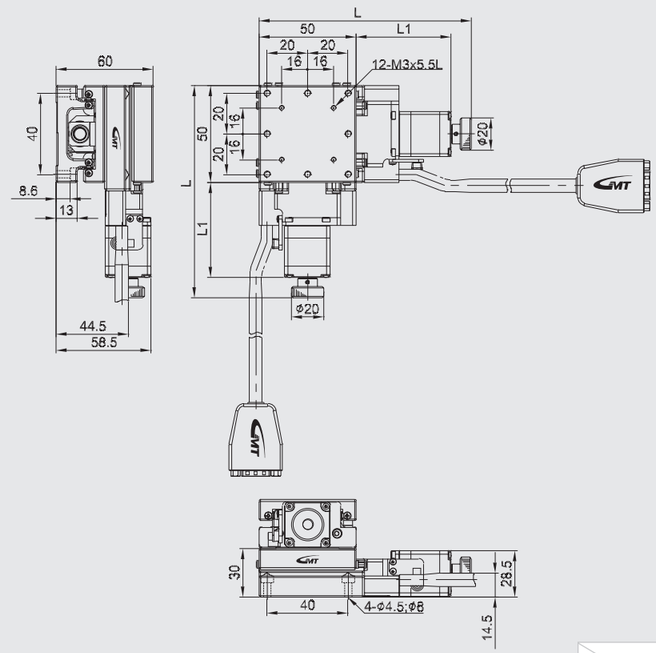

Stroke / Table size	20		30	
	L	L1	L	L1
50	134	70.5	144	80.5

CYS60□ series

Model description

Material	Drive type	Accuracy level	Wiring method	Motor model	Connector type
S Stainless steel	2 Ball screw	P Precision grade	N GMT Standard	C 5-phase stepper X Not equipped	D D-SUB15 (VGA)

CYS 60 20 - S 2 P N - C D - 2 C

Axis & serial numbers	Table size	Travel stroke	Connecting cable (optional)	Driver (optional)
CYS XY axis	60 60*60mm 60 60*60mm 60 60*80mm	20 20mm 30 30mm 50 50mm	Blank Not equipped 2 2m cable*1 4 4m cable*1 6 6m cable*1	Blank Not equipped C Standard specified by GMT

*1 (D-SUB 15 pin female connector + the other side with discrete wirings)

Model Number			CYS6020-S2PN-CD	CYS6030-S2PN-CD	CYS6050-S2PN-CD
Mechanical specifications	Table size		60X60 mm		60X80 mm
	Travel stroke		20 mm	30 mm	50 mm
	Drive type		Ball screw Ø8 lead 1mm		
	Rail		Linear ball guiding		
	Stage material/Surface treatment		Stainless steel / Electroless nickel plating		
	Main unit weight		1.5 Kg	1.6 Kg	2.22 Kg
	Coupling		FAMCS10-5*5		
	Accuracy level		P：Precision grade		
	Wiring method		N：GMT Standard*2		
Precision specifications	Resolution (pulse)	Full / Half	2 μm / 1 μm		
	Maximum speed (full step)		20 mm / sec		
	Positioning precision		5 μm		
	Repeatability precision		±0.5 μm		
	Load capacity		6 Kgf		
	Missed step		1 μm		
	Parallelism		20 μm		
	Dynamic straightness		2 μm		
	Dynamic parallelism		10 μm		
Electrical specifications	Motor	Type/Shaft numbers	5-phase stepper / □28 double shafts		
		Brand/ Model	Sanyo / SH5281-7211		
	Driver brand/Model		Please refer to motor / driver cross-reference table (page E3)		
	Connector	Stage side connector	15-pin male end connector D-SUB		
		Controller side connector	15-pin female end connector D-SUB (optional)		
	Sensor	Origin sensor	Photoelectric sensor EE-SX4134		
		Limit sensor			
		Origin approximation sensor	N / A		
		Power voltage	24V±10%		
		Control output	NPN open collector output under 24V 8mA		
		Output control	Testing (sensing)：output transistor OFF (closed)		

*2 GMT Standard wiring is defined as the product photo, and not optional available.

XY axis

CYS60□-S2PN-CD

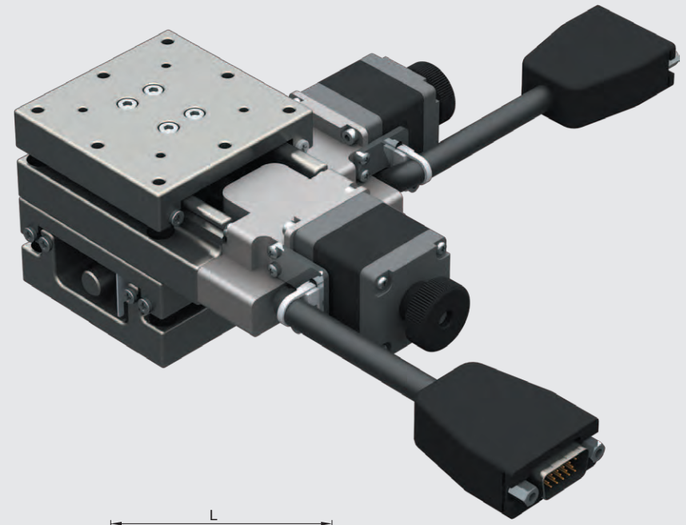

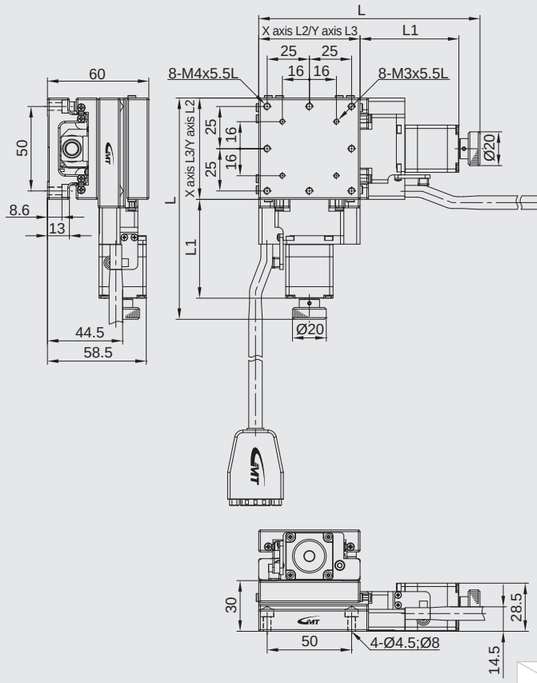

Stroke / Table size	20				30				50			
	L	L1	L2	L3	L	L1	L2	L3	L	L1	L2	L3
60	131	58.5	60	60	141	68.5	60	60	194	101.5	80	60

CYS80□ series

Model description

Material	Drive type	Accuracy level	Wiring method	Motor model	Connector type
S Stainless steel	2 Ball screw	P Precision grade	N GMT Standard	C 5-phase stepper X Not equipped	D D-SUB15 (VGA)

CYS 80 20 - S 2 P N - C D - 2 C

Axis & serial numbers	Table size	Travel stroke	Connecting cable (optional)	Driver (optional)
CYS XY axis	80 80*80mm 80 80*80mm 80 80*100mm	20 20mm 30 30mm 50 50mm	Blank Not equipped 2 2m cable*1 4 4m cable*1 6 6m cable*1	Blank Not equipped C Standard specified by GMT

*1 (D-SUB 15 pin female connector + the other side with discrete wirings)

Model Number			CYS8020-S2PN-CD	CYS8030-S2PN-CD	CYS8050-S2PN-CD
Mechanical specifications	Table size		80X80 mm		80X100 mm
	Travel stroke		20 mm	30 mm	50 mm
	Drive type		Ball screw Ø8 lead 1mm		
	Rail		Linear ball guiding		
	Stage material/Surface treatment		Stainless steel / Electroless nickel plating		
	Main unit weight		2.3 Kg	2.4 Kg	2.7 Kg
	Coupling		FAMCS10-5*5		
	Accuracy level		P：Precision grade		
	Wiring method		N：GMT Standard*2		
Precision specifications	Resolution (pulse)	Full / Half	2 μm / 1 μm		
	Maximum speed (full step)		20 mm / sec		
	Positioning precision		5 μm		
	Repeatability precision		±0.5 μm		
	Load capacity		7 Kgf		
	Missed step		1 μm		
	Parallelism		20 μm		
	Dynamic straightness		2 μm		
	Dynamic parallelism		10 μm		
Electrical specifications	Motor	Type/Shaft numbers	5-phase stepper / □28 double shafts		
		Brand/ Model	Sanyo / SH5281-7211		
	Driver brand/Model		Please refer to motor / driver cross-reference table (page E3)		
	Connector	Stage side connector	15-pin male end connector D-SUB		
		Controller side connector	15-pin female end connector D-SUB (optional)		
	Sensor	Origin sensor	Photoelectric sensor EE-SX4134		
		Limit sensor			
		Origin approximation sensor	N / A		
		Power voltage	24V±10%		
		Control output	NPN open collector output under 24V 8mA		
		Output control	Testing (sensing)：output transistor OFF (closed)		

*2 GMT Standard wiring is defined as the product photo, and not optional available.

XY axis

CYS80□-S2PN-CD

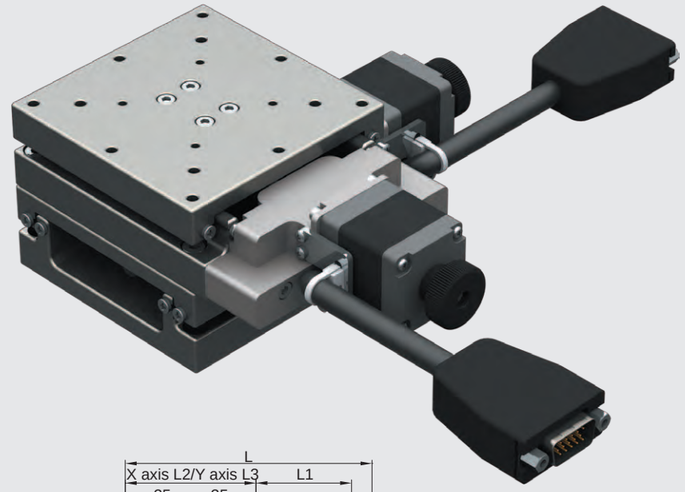

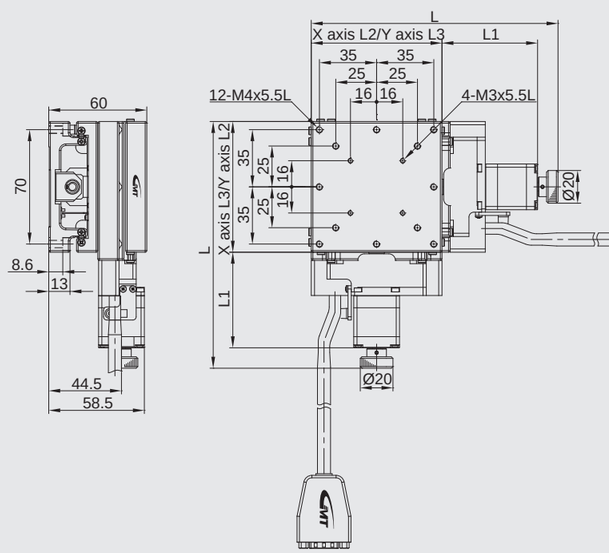

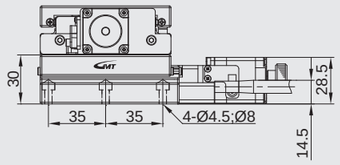

Stroke / Table size	20				30				50			
	L	L1	L2	L3	L	L1	L2	L3	L	L1	L2	L3
80	151	58.5	80	80	161	68.5	80	80	194	101.5	100	80

CZLS50□ series

Model description

Material	Drive type	Accuracy level	Wiring method	Motor model	Connector type
S Stainless steel	2 Ball screw	P Precision grade	N GMT Standard	C 5-phase stepper X Not equipped	D D-SUB15 (VGA)

CZLS 50 20 - S 2 P N - C D - 2 C

Axis & serial numbers	Table size	Travel stroke	Connecting cable (optional)	Driver (optional)
CZLS Z axis	50 50*50mm	20 20mm 30 30mm	Blank Not equipped 2 2m cable*1 4 4m cable*1 6 6m cable*1	Blank Not equipped C Standard specified by GMT

*1 (D-SUB 15 pin female connector + the other side with discrete wirings)

Model Number			CZLS5020-S2PN-CD	CZLS5030-S2PN-CD
Mechanical specifications	Table size		50X50 mm	
	Travel stroke		20 mm	30 mm
	Drive type		Ball screw Ø8 lead 1mm	
	Rail		Linear ball guiding	
	Stage material/Surface treatment		Stainless steel / Electroless nickel plating	
	Main unit weight		0.64 Kg	0.79 Kg
	Coupling		FAMCS10-5*5	
	Accuracy level		P：Precision grade	
	Wiring method		N：GMT Standard*2	
Precision specifications	Resolution (pulse)	Full / Half	2 μm / 1 μm	
	Maximum speed (full step)		20 mm / sec	
	Positioning precision		5 μm	
	Repeatability precision		±0.5 μm	
	Load capacity		4 Kgf	
	Missed step		1 μm	
	Parallelism		15 μm	
	Dynamic straightness		2 μm	
	Dynamic parallelism		10 μm	
Electrical specifications	Motor	Type/Shaft numbers	5-phase stepper / □28 double shafts	
		Brand/ Model	Sanyo / SH5281-7211	
	Driver brand/Model		Please refer to motor / driver cross-reference table (page E3)	
	Connector	Stage side connector	15-pin male end connector D-SUB	
		Controller side connector	15-pin female end connector D-SUB (optional)	
	Sensor	Origin sensor	Photoelectric sensor EE-SX4134	
		Limit sensor		
		Origin approximation sensor	N / A	
		Power voltage	24V±10%	
		Control output	NPN open collector output under 24V 8mA	
		Output control	Testing (sensing)：output transistor OFF (closed)	

*2 GMT Standard wiring is defined as the product photo, and not optional available.

Z axis

CZLS50□-S2PN-CD

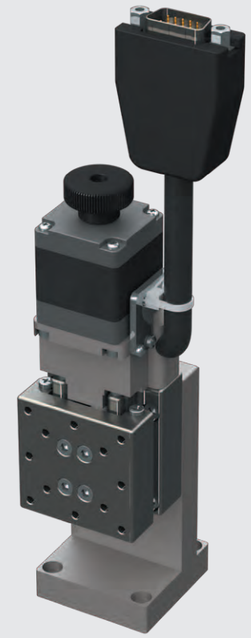

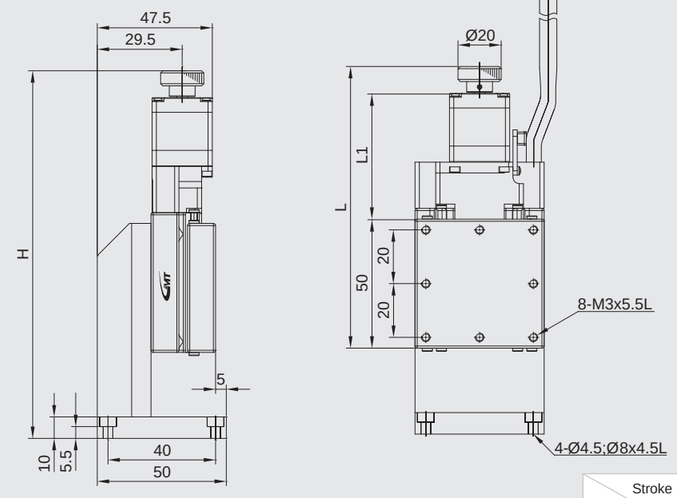

Stroke / Table size	20			30		
	L	L1	H	L	L1	H
50	134	70.5	154	144	80.5	164

CZLS60□ series

Model description

Material	Drive type	Accuracy level	Wiring method	Motor model	Connector type
S Stainless steel	2 Ball screw	P Precision grade	N GMT Standard	C 5-phase stepper X Not equipped	D D-SUB15 (VGA)

CZLS 60 20 - S 2 P N - C D - 2 C

Axis & serial numbers	Table size	Travel stroke	Connecting cable (optional)	Driver (optional)
CZLS Z axis	60 60*60mm 60 60*60mm 60 60*80mm	20 20mm 30 30mm 50 50mm	Blank Not equipped 2 2m cable*1 4 4m cable*1 6 6m cable*1	Blank Not equipped C Standard specified by GMT

*1 (D-SUB 15 pin female connector + the other side with discrete wirings)

Model Number			CZL6020-S2PN-CD	CZL6030-S2PN-CD	CZL6050-S2PN-CD
Mechanical specifications	Table size		60X60 mm		60X80 mm
	Travel stroke		20 mm	30 mm	50 mm
	Drive type		Ball screw Ø8 lead 1mm		
	Rail		Linear ball guiding		
	Stage material/Surface treatment		Stainless steel / Electroless nickel plating		
	Main unit weight		1.13 Kg	1.18 Kg	1.49 Kg
	Coupling		FAMCS10-5*5		
	Accuracy level		P：Precision grade		
	Wiring method		N：GMT Standard*2		
Precision specifications	Resolution (pulse)	Full / Half	2 μm / 1 μm		
	Maximum speed (full step)		20 mm / sec		
	Positioning precision		5 μm		
	Repeatability precision		±0.5 μm		
	Load capacity		5 Kgf		
	Missed step		1 μm		
	Parallelism		20 μm		
	Dynamic straightness		2 μm		
	Dynamic parallelism		10 μm		
Electrical specifications	Motor	Type/Shaft numbers	5-phase stepper / □28 double shafts		
		Brand/ Model	Sanyo / SH5281-7211		
	Driver brand/Model		Please refer to motor / driver cross-reference table (page E3)		
	Connector	Stage side connector	15-pin male end connector D-SUB		
		Controller side connector	15-pin female end connector D-SUB (optional)		
	Sensor	Origin sensor	Photoelectric sensor EE-SX4134		
		Limit sensor			
		Origin approximation sensor	N / A		
		Power voltage	24V±10%		
		Control output	NPN open collector output under 24V 8mA		
		Output control	Testing (sensing)：output transistor OFF (closed)		

*2 GMT Standard wiring is defined as the product photo, and not optional available.

Z axis

CZLS60□-S2PN-CD

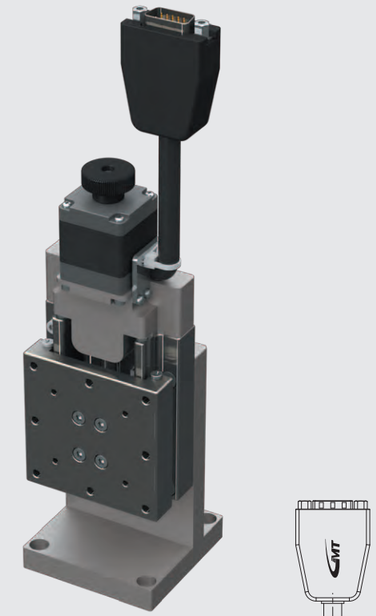

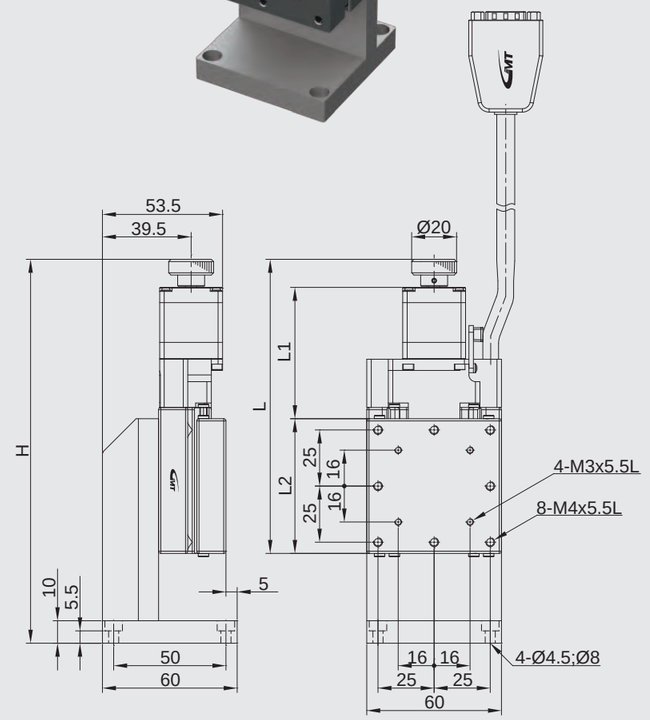

Stroke / Table size	20				30				50			
	L	L1	L2	H	L	L1	L2	H	L	L1	L2	H
60	131	58.5	60	151	141	68.5	60	161	194	101.5	80	214

CZLS80□ series

Model description

Material	Drive type	Accuracy level	Wiring method	Motor model	Connector type
S Stainless steel	2 Ball screw	P Precision grade	N GMT Standard	C 5-phase stepper X Not equipped	D D-SUB15 (VGA)

CZLS 80 20 - S 2 P N - C D - 2 C

Axis & serial numbers	Table size	Travel stroke	Connecting cable (optional)	Driver (optional)
CZLS Z axis	80 80*80mm 80 80*80mm 80 80*100mm	20 20mm 30 30mm 50 50mm	Blank Not equipped 2 2m cable*1 4 4m cable*1 6 6m cable*1	Blank Not equipped C Standard specified by GMT

*1 (D-SUB 15 pin female connector + the other side with discrete wirings)

	Model Number	CZLS8020-S2PN-CD	CZLS8030-S2PN-CD	CZLS8050-S2PN-CD
Mechanical specifications	Table size	80X80 mm		80X100 mm
	Travel stroke	20 mm	30 mm	50 mm
	Drive type	Ball screw Ø8 lead 1mm		
	Rail	Linear ball guiding		
	Stage material/Surface treatment	Stainless steel / Electroless nickel plating		
	Main unit weight	1.75 Kg	1.8 Kg	1.95 Kg
	Coupling	FAMCS10-5*5		
	Accuracy level	P：Precision grade		
	Wiring method	N：GMT Standard*2		
Precision specifications	Resolution (pulse) Full / Half	2 μm / 1 μm		
	Maximum speed (full step)	20 mm / sec		
	Positioning precision	5 μm		
	Repeatability precision	±0.5 μm		
	Load capacity	5 Kgf		
	Missed step	1 μm		
	Parallelism	20 μm		
	Dynamic straightness	2 μm		
	Dynamic parallelism	10 μm		
Electrical specifications	Motor: Type/Shaft numbers	5-phase stepper / □28 double shafts		
	Motor: Brand/ Model	Sanyo / SH5281-7211		
	Driver brand/Model	Please refer to motor / driver cross-reference table (page E3)		
	Connector: Stage side connector	15-pin male end connector D-SUB		
	Connector: Controller side connector	15-pin female end connector D-SUB (optional)		
	Sensor: Origin sensor / Limit sensor	Photoelectric sensor EE-SX4134		
	Sensor: Origin approximation sensor	N / A		
	Sensor: Power voltage	24V±10%		
	Sensor: Control output	NPN open collector output under 24V 8mA		
	Sensor: Output control	Testing (sensing)：output transistor OFF (closed)		

*2 GMT Standard wiring is defined as the product photo, and not optional available.

Z axis

CZLS80□-S2PN-CD

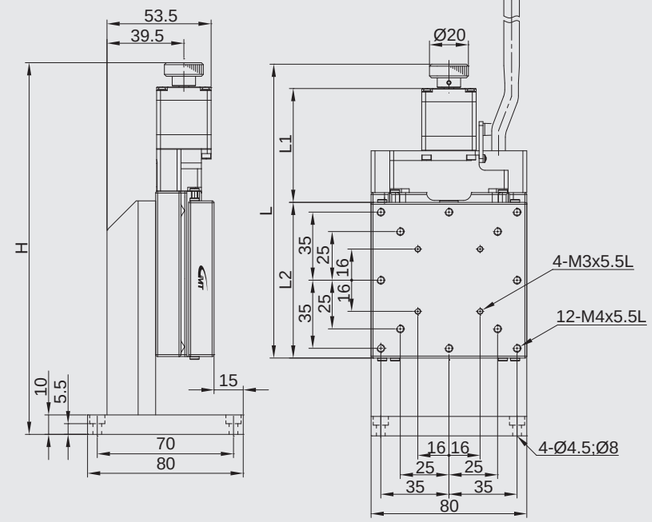

Stroke / Table size	20				30				50			
	L	L1	L2	H	L	L1	L2	H	L	L1	L2	H
80	151	58.5	80	171	161	68.5	80	181	194	101.5	100	214

CXZS50□ series

Model description

Material	Drive type	Accuracy level	Wiring method	Motor model	Connector type
S Stainless steel	2 Ball screw	P Precision grade	N GMT Standard	C 5-phase stepper X Not equipped	D D-SUB15 (VGA)

CXZS 50 20 - S 2 P N - C D - 2 C

Axis & serial numbers	Table size	Travel stroke	Connecting cable (optional)	Driver (optional)
CXZS XZ axis	50 50*50mm	20 20mm 30 30mm	Blank Not equipped 2 2m cable*1 4 4m cable*1 6 6m cable*1	Blank Not equipped C Standard specified by GMT

*1 (D-SUB 15 pin female connector + the other side with discrete wirings)

Model Number			CXZS5020-S2PN-CD	CXZS5030-S2PN-CD
Mechanical specifications	Table size		50X50 mm	
	Travel stroke		20 mm	30 mm
	Drive type		Ball screw Ø8 lead 1mm	
	Rail		Linear ball guiding	
	Stage material/Surface treatment		Stainless steel / Electroless nickel plating	
	Main unit weight		1.21 Kg	1.51 Kg
	Coupling		FAMCS10-5*5	
	Accuracy level		P：Precision grade	
	Wiring method		N：GMT Standard*2	
Precision specifications	Resolution (pulse)	Full / Half	2 μm / 1 μm	
	Maximum speed (full step)		20 mm / sec	
	Positioning precision		5 μm	
	Repeatability precision		±0.5 μm	
	Load capacity		4 Kgf	
	Missed step		1 μm	
	Parallelism		15 μm	
	Dynamic straightness		2 μm	
	Dynamic parallelism		10 μm	
Electrical specifications	Motor	Type/Shaft numbers	5-phase stepper / □28 double shafts	
		Brand/ Model	Sanyo / SH5281-7211	
	Driver brand/Model		Please refer to motor / driver cross-reference table (page E3)	
	Connector	Stage side connector	15-pin male end connector D-SUB	
		Controller side connector	15-pin female end connector D-SUB (optional)	
	Sensor	Origin sensor	Photoelectric sensor EE-SX4134	
		Limit sensor		
		Origin approximation sensor	N / A	
		Power voltage	24V±10%	
		Control output	NPN open collector output under 24V 8mA	
		Output control	Testing (sensing)：output transistor OFF (closed)	

*2 GMT Standard wiring is defined as the product photo, and not optional available.

XZ axis

CXZS50□-S2PN-CD

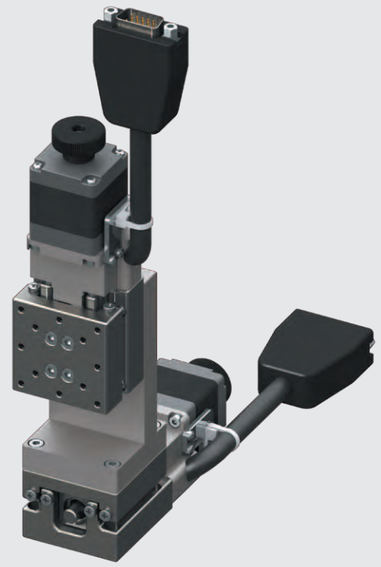

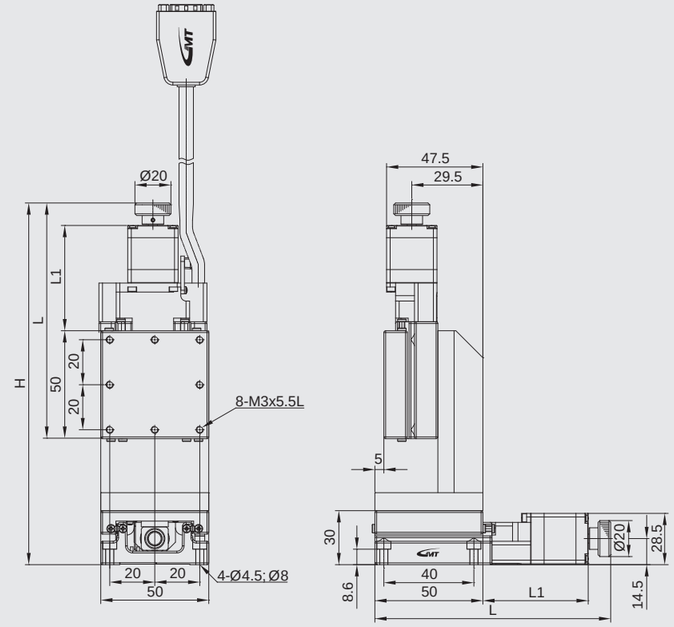

Table size \ Stroke	20			30		
	L	L1	H	L	L1	H
50	134	70.5	184	144	80.5	194

CXZS60□ series

Model description

Material	Drive type	Accuracy level	Wiring method	Motor model	Connector type
S Stainless steel	2 Ball screw	P Precision grade	N GMT Standard	C 5-phase stepper X Not equipped	D D-SUB15 (VGA)

CXZS 60 20 - S 2 P N - C D - 2 C

Axis & serial numbers	Table size	Travel stroke	Connecting cable (optional)	Driver (optional)
CXZS XZ axis	60 60*60mm 60 60*60mm 60 60*80mm	20 20mm 30 30mm 50 50mm	Blank Not equipped 2 2m cable*1 4 4m cable*1 6 6m cable*1	Blank Not equipped C Standard specified by GMT

*1 (D-SUB 15 pin female connector + the other side with discrete wirings)

Model Number			CXZS6020-S2PN-CD	CXZS6030-S2PN-CD	CXZS6050-S2PN-CD
Mechanical specifications	Table size		60X60 mm		60X80 mm
	Travel stroke		20 mm	30 mm	50 mm
	Drive type		Ball screw Ø8 lead 1mm		
	Rail		Linear ball guiding		
	Stage material/Surface treatment		Stainless steel / Electroless nickel plating		
	Main unit weight		1.63 Kg	2.08 Kg	2.6 Kg
	Coupling		FAMCS10-5*5		
	Accuracy level		P：Precision grade		
	Wiring method		N：GMT Standard*2		
Precision specifications	Resolution (pulse)	Full / Half	2 μm / 1 μm		
	Maximum speed (full step)		20 mm / sec		
	Positioning precision		5 μm		
	Repeatability precision		±0.5 μm		
	Load capacity		5 Kgf		
	Missed step		1 μm		
	Parallelism		20 μm		
	Dynamic straightness		2 μm		
	Dynamic parallelism		10 μm		
Electrical specifications	Motor	Type/Shaft numbers	5-phase stepper / □28 double shafts		
		Brand/ Model	Sanyo / SH5281-7211		
	Driver brand/Model		Please refer to motor / driver cross-reference table (page E3)		
	Connector	Stage side connector	15-pin male end connector D-SUB		
		Controller side connector	15-pin female end connector D-SUB (optional)		
	Sensor	Origin sensor	Photoelectric sensor EE-SX4134		
		Limit sensor			
		Origin approximation sensor	N / A		
		Power voltage	24V±10%		
		Control output	NPN open collector output under 24V 8mA		
		Output control	Testing (sensing)：output transistor OFF (closed)		

*2 GMT Standard wiring is defined as the product photo, and not optional available.

XZ axis

CXZS60□-S2PN-CD

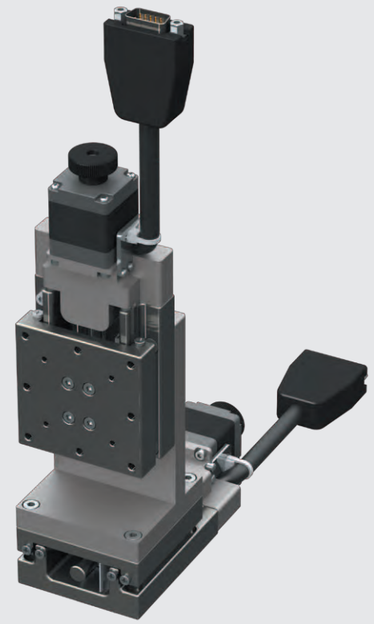

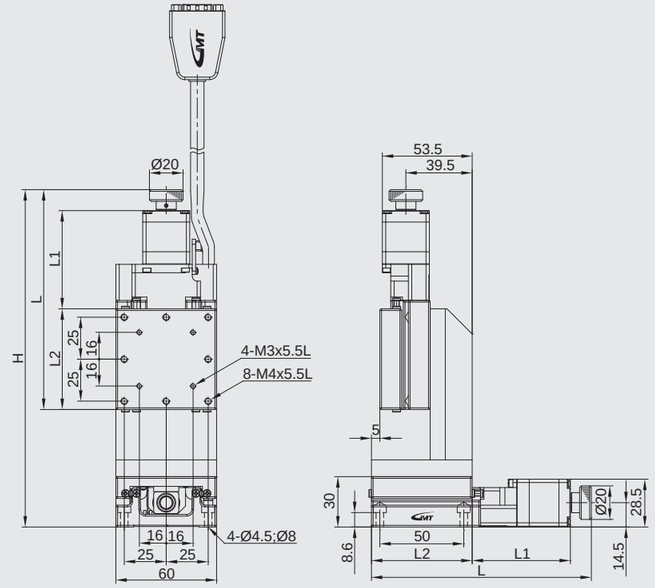

Stroke / Table size	20				30				50			
	L	L1	L2	H	L	L1	L2	H	L	L1	L2	H
60	131	58.5	60	181	141	68.5	60	191	194	101.5	80	244

CXZS80□ series

Model description

Material	Drive type	Accuracy level	Wiring method	Motor model	Connector type
S Stainless steel	2 Ball screw	P Precision grade	N GMT Standard	C 5-phase stepper X Not equipped	D D-SUB15 (VGA)

CXZS 80 20 - S 2 P N - C D - 2 C

Axis & serial numbers	Table size	Travel stroke	Connecting cable (optional)	Driver (optional)
CXZS XZ axis	80 80*80mm 80 80*80mm 80 80*100mm	20 20mm 30 30mm 50 50mm	Blank Not equipped 2 2m cable*1 4 4m cable*1 6 6m cable*1	Blank Not equipped C Standard specified by GMT

*1 (D-SUB 15 pin female connector + the other side with discrete wirings)

Model Number			CXZS8020-S2PN-CD	CXZS8030-S2PN-CD	CXZS8050-S2PN-CD
Mechanical specifications	Table size		80X80 mm		80X100 mm
	Travel stroke		20 mm	30 mm	50 mm
	Drive type		Ball screw Ø8 lead 1mm		
	Rail		Linear ball guiding		
	Stage material/Surface treatment		Stainless steel / Electroless nickel plating		
	Main unit weight		2.9 Kg	3 Kg	3.5 Kg
	Coupling		FAMCS10-5*5		
	Accuracy level		P：Precision grade		
	Wiring method		N：GMT Standard*2		
Precision specifications	Resolution (pulse)	Full / Half	2 μm / 1 μm		
	Maximum speed (full step)		20 mm / sec		
	Positioning precision		5 μm		
	Repeatability precision		±0.5 μm		
	Load capacity		6 Kgf		
	Missed step		1 μm		
	Parallelism		20 μm		
	Dynamic straightness		2 μm		
	Dynamic parallelism		10 μm		
Electrical specifications	Motor	Type/Shaft numbers	5-phase stepper / □28 double shafts		
		Brand/ Model	Sanyo / SH5281-7211		
	Driver brand/Model		Please refer to motor / driver cross-reference table (page E3)		
	Connector	Stage side connector	15-pin male end connector D-SUB		
		Controller side connector	15-pin female end connector D-SUB (optional)		
	Sensor	Origin sensor	Photoelectric sensor EE-SX4134		
		Limit sensor			
		Origin approximation sensor	N / A		
		Power voltage	24V±10%		
		Control output	NPN open collector output under 24V 8mA		
		Output control	Testing (sensing)：output transistor OFF (closed)		

*2 GMT Standard wiring is defined as the product photo, and not optional available.

XZ axis

CXZS80□-S2PN-CD

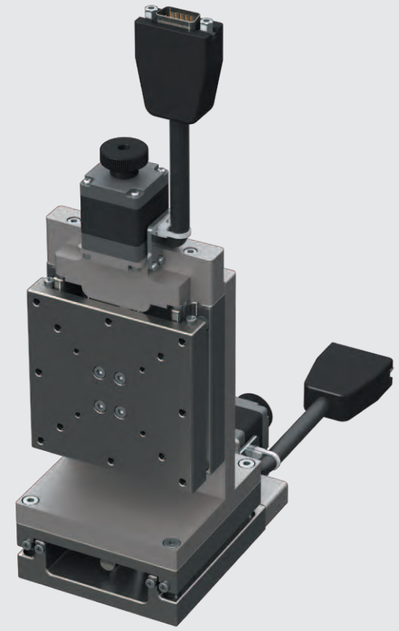

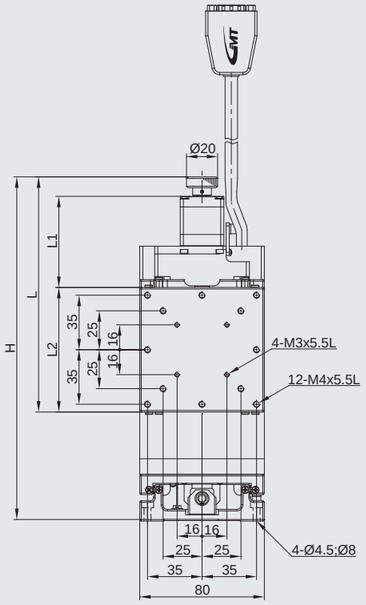

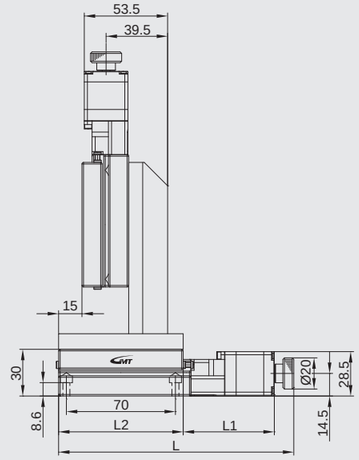

Table size \ Stroke	20				30				50			
	L	L1	L2	H	L	L1	L2	H	L	L1	L2	H
80	151	58.5	80	201	161	68.5	80	211	194	101.5	100	244

CXYZS50□ series

Model description

Material	Drive type	Accuracy level	Wiring method	Motor model	Connector type
S Stainless steel	2 Ball screw	P Precision grade	N GMT Standard	C 5-phase stepper X Not equipped	D D-SUB15 (VGA)

CXYZS 50 20 - S 2 P N - C D - 2 C

Axis & serial numbers	Table size	Travel stroke	Connecting cable (optional)	Driver (optional)
CXYZS XYZ axis	50 50*50mm	20 20mm 30 30mm	Blank Not equipped 2 2m cable*1 4 4m cable*1 6 6m cable*1	Blank Not equipped C Standard specified by GMT

*1 (D-SUB 15 pin female connector + the other side with discrete wirings)

Model Number			CXYZS5020-S2PN-CD	CXYZS5030-S2PN-CD
Mechanical specifications	Table size		40X40 mm	
	Travel stroke		20 mm	30 mm
	Drive type		Ball screw Ø8 lead 1mm	
	Rail		Linear ball guiding	
	Stage material/Surface treatment		Stainless steel / Electroless nickel plating	
	Main unit weight		1.78 Kg	2.23 Kg
	Coupling		FAMCS10-5*5	
	Accuracy level		P：Precision grade	
	Wiring method		N：GMT Standard*2	
Precision specifications	Resolution (pulse)	Full / Half	2 μm / 1 μm	
	Maximum speed (full step)		20 mm / sec	
	Positioning precision		5 μm	
	Repeatability precision		±0.5 μm	
	Load capacity		4 Kgf	
	Missed step		1 μm	
	Parallelism		15 μm	
	Dynamic straightness		2 μm	
	Dynamic parallelism		10 μm	
Electrical specifications	Motor	Type/Shaft numbers	5-phase stepper / □28 double shafts	
		Brand/ Model	Sanyo / SH5281-7211	
	Driver brand/Model		Please refer to motor / driver cross-reference table (page E3)	
	Connector	Stage side connector	15-pin male end connector D-SUB	
		Controller side connector	15-pin female end connector D-SUB (optional)	
	Sensor	Origin sensor	Photoelectric sensor EE-SX4134	
		Limit sensor		
		Origin approximation sensor	N / A	
		Power voltage	24V±10%	
		Control output	NPN open collector output under 24V 8mA	
		Output control	Testing (sensing)：output transistor OFF (closed)	

*2 GMT Standard wiring is defined as the product photo, and not optional available.

XYZ axis

CXYZS50□-S2PN-CD

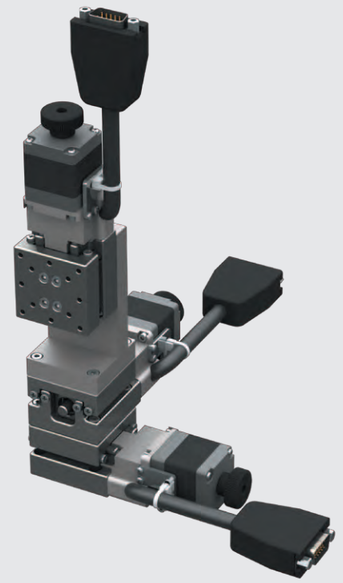

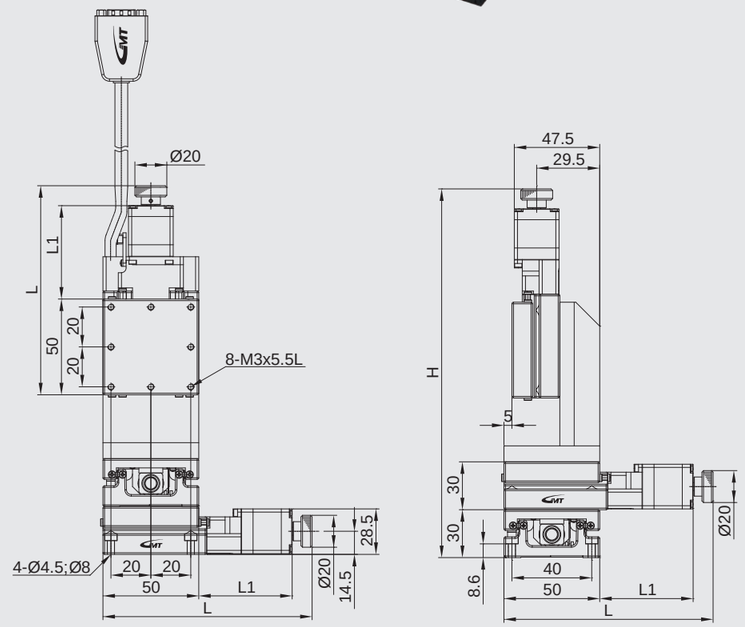

Stroke / Table size	20			30		
	L	L1	H	L	L1	H
50	134	70.5	214	144	80.5	224

CXYZS60□ series

Model description

Material	Drive type	Accuracy level	Wiring method	Motor model	Connector type
S Stainless steel	2 Ball screw	P Precision grade	N GMT Standard	C 5-phase stepper X Not equipped	D D-SUB15 (VGA)

CXYZS 60 20 - S 2 P N - C D - 2 C

Axis & serial numbers	Table size	Travel stroke	Connecting cable (optional)	Driver (optional)
CXYZS XYZ axis	60 60*60mm 60 60*60mm 60 60*80mm	20 20mm 30 30mm 50 50mm	Blank Not equipped 2 2m cable*1 4 4m cable*1 6 6m cable*1	Blank Not equipped C Standard specified by GMT

*1 (D-SUB 15 pin female connector + the other side with discrete wirings)

Model Number			CXYZS6020-S2PN-CD	CXYZS6030-S2PN-CD	CXYZS6050-S2PN-CD
Mechanical specifications	Table size		60X60 mm		60X80 mm
	Travel stroke		20 mm	30 mm	50 mm
	Drive type		Ball screw Ø8 lead 1mm		
	Rail		Linear ball guiding		
	Stage material/Surface treatment		Stainless steel / Electroless nickel plating		
	Main unit weight		2.63 Kg	2.98 Kg	3.72 Kg
	Coupling		FAMCS10-5*5		
	Accuracy level		P：Precision grade		
	Wiring method		N：GMT Standard*2		
Precision specifications	Resolution (pulse)	Full / Half	2 μm / 1 μm		
	Maximum speed (full step)		20 mm / sec		
	Positioning precision		5 μm		
	Repeatability precision		±0.5 μm		
	Load capacity		5 Kgf		
	Missed step		1 μm		
	Parallelism		20 μm		
	Dynamic straightness		2 μm		
	Dynamic parallelism		10 μm		
Electrical specifications	Motor	Type/Shaft numbers	5-phase stepper / □28 double shafts		
		Brand/ Model	Sanyo / SH5281-7211		
	Driver brand/Model		Please refer to motor / driver cross-reference table (page E3)		
	Connector	Stage side connector	15-pin male end connector D-SUB		
		Controller side connector	15-pin female end connector D-SUB (optional)		
	Sensor	Origin sensor	Photoelectric sensor EE-SX4134		
		Limit sensor			
		Origin approximation sensor	N / A		
		Power voltage	24V±10%		
		Control output	NPN open collector output under 24V 8mA		
		Output control	Testing (sensing)：output transistor OFF (closed)		

*2 GMT Standard wiring is defined as the product photo, and not optional available.

XYZ axis

CXYZS60□-S2PN-CD

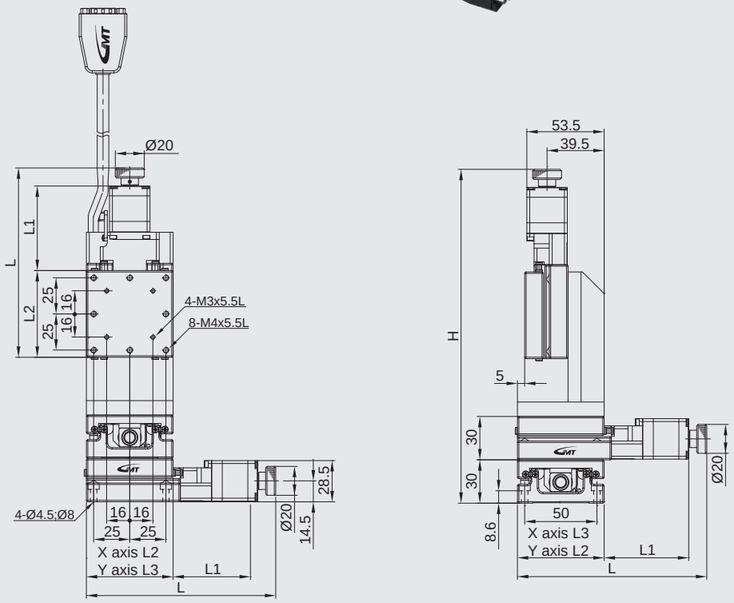

Stroke / Table size	20					30					50				
	L	L1	L2	L3	H	L	L1	L2	L3	H	L	L1	L2	L3	H
60	131	58.5	60	60	211	141	68.5	60	60	221	194	101.5	80	60	274

CXYZS80□ series

Model description

Material	Drive type	Accuracy level	Wiring method	Motor model	Connector type
S Stainless steel	2 Ball screw	P Precision grade	N GMT Standard	C 5-phase stepper X Not equipped	D D-SUB15 (VGA)

CXYZS 80 20 - S 2 P N - C D - 2 C

Axis & serial numbers	Table size	Travel stroke	Connecting cable (optional)	Driver (optional)
CXYZS XYZ axis	80 80*80mm 80 80*80mm 80 80*100mm	20 20mm 30 30mm 50 50mm	Blank Not equipped 2 2m cable*1 4 4m cable*1 6 6m cable*1	Blank Not equipped C Standard specified by GMT

*1 (D-SUB 15 pin female connector + the other side with discrete wirings)

Model Number			CXYZS8020-S2PN-CD	CXYZS8030-S2PN-CD	CXYZS8050-S2PN-CD
Mechanical specifications	Table size		80X80 mm		80X100 mm
	Travel stroke		20 mm	30 mm	50 mm
	Drive type		Ball screw Ø8 lead 1mm		
	Rail		Linear ball guiding		
	Stage material/Surface treatment		Stainless steel / Electroless nickel plating		
	Main unit weight		4.05 Kg	4.2 Kg	4.65 Kg
	Coupling		FAMCS10-5*5		
	Accuracy level		P：Precision grade		
	Wiring method		N：GMT Standard*2		
Precision specifications	Resolution (pulse)	Full / Half	2 μm / 1 μm		
	Maximum speed (full step)		20 mm / sec		
	Positioning precision		5 μm		
	Repeatability precision		±0.5 μm		
	Load capacity		6 Kgf		
	Missed step		1 μm		
	Parallelism		20 μm		
	Dynamic straightness		2 μm		
	Dynamic parallelism		10 μm		
Electrical specifications	Motor	Type/Shaft numbers	5-phase stepper / □28 double shafts		
		Brand/ Model	Sanyo / SH5281-7211		
	Driver brand/Model		Please refer to motor / driver cross-reference table (page E3)		
	Connector	Stage side connector	15-pin male end connector D-SUB		
		Controller side connector	15-pin female end connector D-SUB (optional)		
	Sensor	Origin sensor	Photoelectric sensor EE-SX4134		
		Limit sensor			
		Origin approximation sensor	N / A		
		Power voltage	24V±10%		
		Control output	NPN open collector output under 24V 8mA		
		Output control	Testing (sensing)：output transistor OFF (closed)		

*2 GMT Standard wiring is defined as the product photo, and not optional available.

XYZ axis

CXYZS80□-S2PN-CD

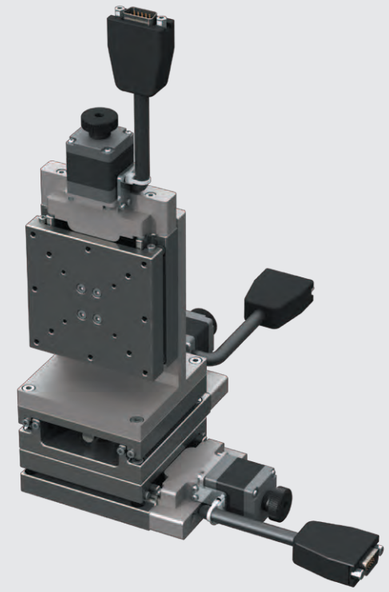

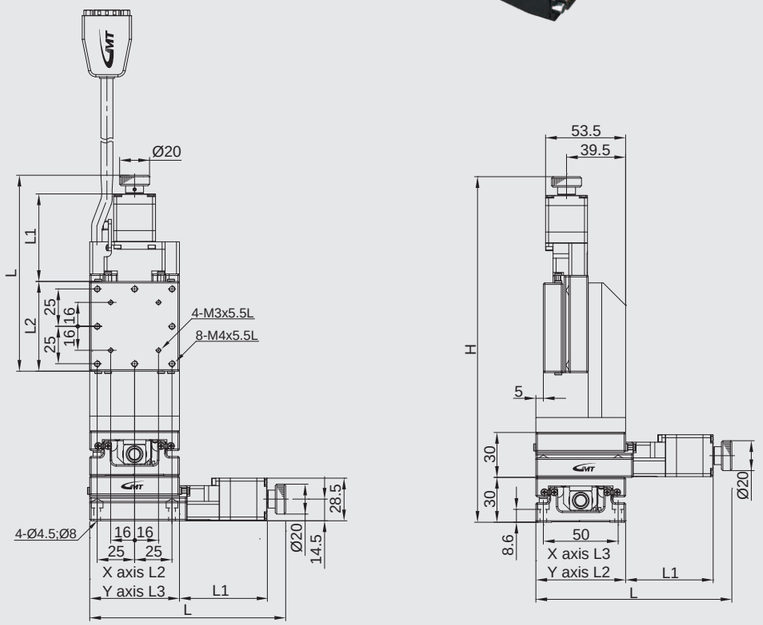

Stroke / Table size	20					30					50				
	L	L1	L2	L3	H	L	L1	L2	L3	H	L	L1	L2	L3	H
80	151	58.5	80	80	231	161	68.5	80	80	241	194	101.5	100	80	274

Model description

CXN50☐ / CXC50☐ series

Material		Drive type		Accuracy level		Wiring method		Motor model		Connector type	
S	Stainless steel	2	Ball screw	P	Precision grade	N	GMT Standard	C	5-phase stepper	D	D-SUB15 (VGA)
								X	Not equipped		

CXN 50 30 - S 2 P N - C D - P1 - 2 C

Axis & serial numbers		Table size		Stroke		Ball screw pitch		Connecting cable (optional)		Driver (optional)	
CXN	X axis (w/o cover)	50	50*50mm	30	30mm	P1	1mm	Blank	Not equipped	Blank	Not equipped
CXC	X axis (w/cover)			50	50mm	P2	2mm	2	2m cable*1	C	Standard specified by GMT
				75	75mm			4	4m cable*1		
								6	6m cable*1		

*1 (D-SUB 15 pin female connector + the other side with discrete wirings)

Model Number			CXN5030-S2PN-CD-P1 / CXC5030-S2PN-CD-P1	CXN5030-S2PN-CD-P2 / CXC5030-S2PN-CD-P2	CXN5050-S2PN-CD-P1 / CXC5050-S2PN-CD-P1	CXN5050-S2PN-CD-P2 / CXC5050-S2PN-CD-P2	CXN5075-S2PN-CD-P1 / CXC5075-S2PN-CD-P1	CXN5075-S2PN-CD-P2 / CXC5075-S2PN-CD-P2
Mechanical specifications	Table size		50X50 mm					
	Travel stroke		30 mm		50 mm		75 mm	
	Drive type		Ball screw Ø8 lead 1mm	Ball screw Ø8 lead 2mm	Ball screw Ø8 lead 1mm	Ball screw Ø8 lead 2mm	Ball screw Ø8 lead 1mm	Ball screw Ø8 lead 2mm
	Rail		Circular Linear ball guiding					
	Stage material/Surface treatment		Stainless steel / Electroless nickel plating					
	Main unit weight		N：0.97 Kg / C：1.06 Kg		N：1.1 Kg / C：1.17 Kg		N：1.24 Kg / C：1.29 Kg	
	Coupling		FAMCS10-5*5					
	Accuracy level		P：Precision grade					
	Wiring method		N：GMT Standard*2					
Precision specifications	Resolution (pulse)	Full / Half	2 μm / 1 μm	4 μm / 2 μm	2 μm / 1 μm	4 μm / 2 μm	2 μm / 1 μm	4 μm / 2 μm
	Maximum speed (full step)		20 mm / sec	40 mm / sec	20 mm / sec	40 mm / sec	20 mm / sec	40 mm / sec
	Positioning precision		5 μm				7 μm	
	Repeatability precision		±0.5 μm					
	Load capacity		10 Kgf					
	Missed step		1 μm					
	Parallelism		15 μm					
	Dynamic straightness		2 μm					
	Dynamic parallelism		10 μm					
Electrical specifications	Motor	Type/Shaft numbers	5-phase stepper / ☐28 double shafts					
		Brand/ Model	Sanyo / SH5281-7211					
	Driver brand/Model		Please refer to motor / driver cross-reference table (page E3)					
	Connector	Stage side connector	15-pin male end connector D-SUB					
		Controller side connector	15-pin female end connector D-SUB (optional)					
	Sensor	Origin sensor	Photoelectric sensor EE-SX4134					
		Limit sensor						
		Origin approximation sensor	N/A					
		Power voltage	24V±10%					
		Control output	NPN open collector output under 24V 8mA					
		Output control	Testing (sensing)：output transistor OFF (closed)					

*2 GMT Standard wiring is defined as the product photo, and not optional available.

X axis

CXN50☐-S2PN-CD-P1

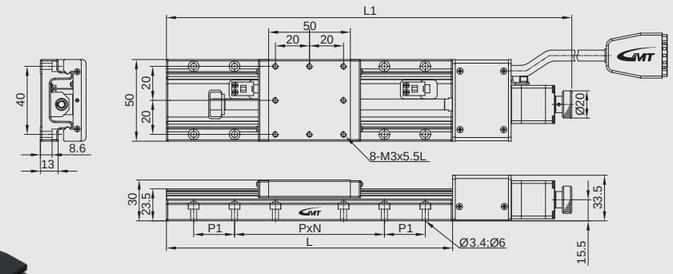

Stroke	L	L1	P	N	P1
30	110	197.5	40	1	20
50	120	217.5	40	3	N/A
75	145	242.5	40	3	N/A

CXC50☐-S2PN-CD-P1

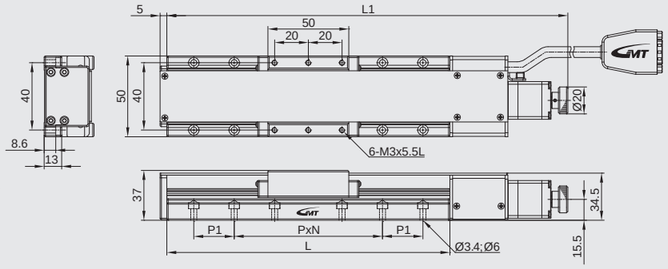

Model description

CXN50☐ / CXC50☐ series

Material	Drive type	Accuracy level	Wiring method	Motor model	Connector type
S Stainless steel	2 Ball screw	P Precision grade	N GMT Standard	C 5-phase stepper X Not equipped	D D-SUB15 (VGA)

CXN 50 100 - S 2 P N - C D - P1 - 2 C

Axis & serial numbers	Table size	Stroke	Ball screw pitch	Connecting cable (optional)	Driver (optional)
CXN X axis (w/o cover)	50 50*50mm	100 100mm	P1 1mm	Blank Not equipped	Blank Not equipped
CXC X axis (w/cover)		150 150mm	P2 2mm	2 2m cable*1	C Standard specified by GMT
		200 200mm	P4 4mm	4 4m cable*1	
				6 6m cable*1	

*1 (D-SUB 15 pin female connector + the other side with discrete wirings)

Model Number			CXN50100-S2PN-CD-P1 CXC50100-S2PN-CD-P1	CXN50100-S2PN-CD-P2 CXC50100-S2PN-CD-P2	CXN50150-S2PN-CD-P2 CXC50150-S2PN-CD-P2	CXN50150-S2PN-CD-P4 CXC50150-S2PN-CD-P4	CXN50200-S2PN-CD-P2 CXC50200-S2PN-CD-P2	CXN50200-S2PN-CD-P4 CXC50200-S2PN-CD-P4
Mechanical specifications	Table size		50X50 mm					
	Travel stroke		100 mm		150 mm		200 mm	
	Drive type		Ball screw Ø8 lead 1mm	Ball screw Ø8 lead 2mm	Ball screw Ø8 lead 2mm	Ball screw Ø8 lead 4mm	Ball screw Ø8 lead 2mm	Ball screw Ø8 lead 4mm
	Rail		Circular Linear ball guiding					
	Stage material/Surface treatment		Stainless steel / Electroless nickel plating					
	Main unit weight		N：1.35 Kg / C：1.39 Kg		N：1.5 Kg / C：1.82 Kg		N：1.76 Kg / C：2.02 Kg	
	Coupling		FAMCS10-5*5					
	Accuracy level		P：Precision grade					
	Wiring method		N：GMT Standard*2					
Precision specifications	Resolution (pulse)	Full / Half	2 μm / 1 μm	4 μm / 2 μm	2 μm / 1 μm	4 μm / 2 μm	2 μm / 1 μm	4 μm / 2 μm
	Maximum speed (full step)		20 mm / sec	40 mm / sec	20 mm / sec	40 mm / sec	20 mm / sec	40 mm / sec
	Positioning precision		10 μm		15 μm			
	Repeatability precision		±0.5 μm					
	Load capacity		10 Kgf					
	Missed step		1 μm					
	Parallelism		15 μm					
	Dynamic straightness		4 μm				6 μm	
	Dynamic parallelism		10 μm				15 μm	
Electrical specifications	Motor	Type/Shaft numbers	5-phase stepper / ☐28 double shafts					
		Brand/ Model	Sanyo / SH5281-7211					
	Driver brand/Model		Please refer to motor / driver cross-reference table (page E3)					
	Connector	Stage side connector	15-pin male end connector D-SUB					
		Controller side connector	15-pin female end connector D-SUB (optional)					
	Sensor	Origin sensor	Photoelectric sensor EE-SX4134					
		Limit sensor						
		Origin approximation sensor	N/A					
		Power voltage	24V±10%					
		Control output	NPN open collector output under 24V 8mA					
		Output control	Testing (sensing)：output transistor OFF (closed)					

*2 GMT Standard wiring is defined as the product photo, and not optional available.

X axis

CXN50☐-S2PN-CD-P1

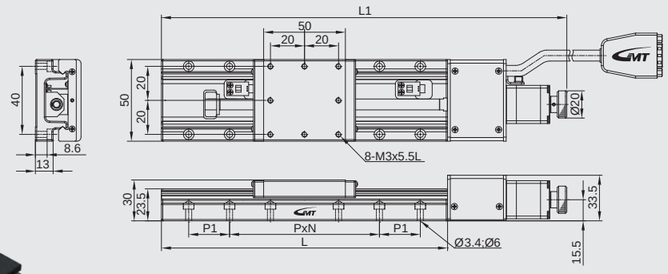

Stroke	L	L1	P	N	P1
100	170	268	40	4	N/A
150	220	318	40	5	16
200	270	368	40	6	N/A

CXC50☐-S2PN-CD-P1

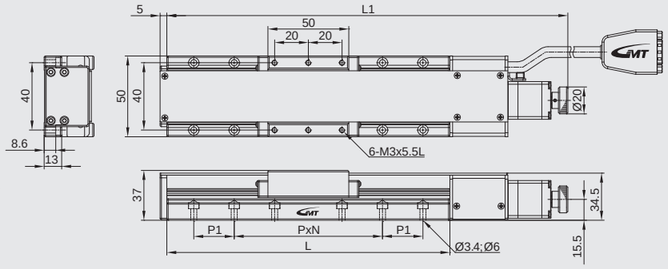

Model description

CXN60☐ / CXC60☐ series

Material		Drive type		Accuracy level		Wiring method		Motor model		Connector type	
S	Stainless steel	2	Ball screw	P	Precision grade	N	GMT Standard	C	5-phase stepper	D	D-SUB15 (VGA)
								X	Not equipped		

CXN 60 30 - S 2 P N - C D - P1 - 2 C

Axis & serial numbers		Table size		Stroke		Ball screw pitch		Connecting cable (optional)		Driver (optional)	
CXN	X axis (w/o cover)	60	60*60mm	30	30mm	P1	1mm	Blank	Not equipped	Blank	Not equipped
CXC	X axis (w/cover)			50	50mm	P2	2mm	2	2m cable*1	C	Standard specified by GMT
				75	75mm			4	4m cable*1		
								6	6m cable*1		

*1 (D-SUB 15 pin female connector + the other side with discrete wirings)

Model Number			CXN6030-S2PN-CD-P1	CXN6030-S2PN-CD-P2	CXN6050-S2PN-CD-P1	CXN6050-S2PN-CD-P2	CXN6075-S2PN-CD-P1	CXN6075-S2PN-CD-P2
			CXC6030-S2PN-CD-P1	CXC6030-S2PN-CD-P2	CXC6050-S2PN-CD-P1	CXC6050-S2PN-CD-P2	CXC6075-S2PN-CD-P1	CXC6075-S2PN-CD-P2
Mechanical specifications	Table size		60X60 mm					
	Travel stroke		30 mm		50 mm		75 mm	
	Drive type		Ball screw Ø8 lead 1mm	Ball screw Ø8 lead 2mm	Ball screw Ø8 lead 1mm	Ball screw Ø8 lead 2mm	Ball screw Ø8 lead 1mm	Ball screw Ø8 lead 2mm
	Rail		Circular Linear ball guiding					
	Stage material/Surface treatment		Stainless steel / Electroless nickel plating					
	Main unit weight		N：1.1Kg / C：1.29 Kg		N：1.19 Kg / C：1.33 Kg		N：1.3 Kg / C：1.44 Kg	
	Coupling		FAMCS10-5*5					
	Accuracy level		P：Precision grade					
	Wiring method		N：GMT Standard*2					
Precision specifications	Resolution (pulse)	Full / Half	2 μm / 1 μm	4 μm / 2 μm	2 μm / 1 μm	4 μm / 2 μm	2 μm / 1 μm	4 μm / 2 μm
	Maximum speed (full step)		20 mm / sec	40 mm / sec	20 mm / sec	40 mm / sec	20 mm / sec	40 mm / sec
	Positioning precision		5 μm				7 μm	
	Repeatability precision		±0.5 μm					
	Load capacity		14 Kgf					
	Missed step		1 μm					
	Parallelism		20 μm					
	Dynamic straightness		2 μm					
	Dynamic parallelism		10 μm					
Electrical specifications	Motor	Type/Shaft numbers	5-phase stepper / ☐28 double shafts					
		Brand/ Model	Sanyo / SH5281-7211					
	Driver brand/Model		Please refer to motor / driver cross-reference table (page E3)					
	Connector	Stage side connector	15-pin male end connector D-SUB					
		Controller side connector	15-pin female end connector D-SUB (optional)					
	Sensor	Origin sensor	Photoelectric sensor EE-SX4134					
		Limit sensor						
		Origin approximation sensor	N/A					
		Power voltage	24V±10%					
		Control output	NPN open collector output under 24V 8mA					
		Output control	Testing (sensing)：output transistor OFF (closed)					

*2 GMT Standard wiring is defined as the product photo, and not optional available.

X axis

CXN60☐-S2PN-CD-P1

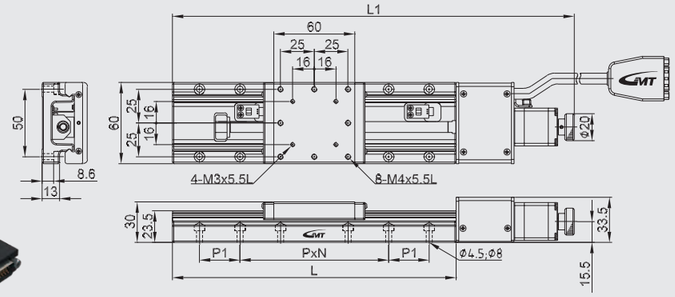

Stroke	L	L1	P	N	P1
30	120	209	50	1	25
50	140	229	50	1	25
75	165	254	50	3	N/A

CXC60☐-S2PN-CD-P1

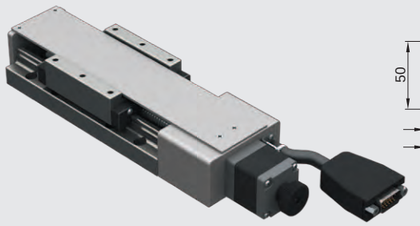

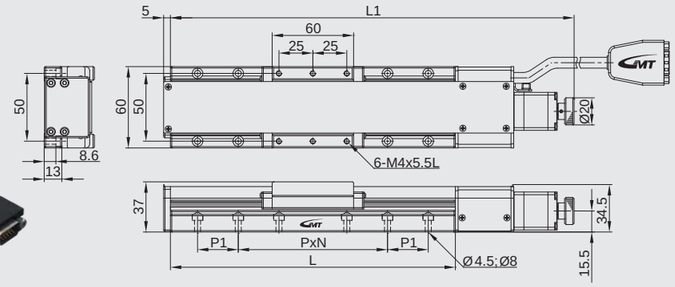

Model description

CXN60☐ / CXC60☐ series

Material	Drive type	Accuracy level	Wiring method	Motor model	Connector type
S Stainless steel	2 Ball screw	P Precision grade	N GMT Standard	C 5-phase stepper X Not equipped	D D-SUB15 (VGA)

CXN 60 100 - S 2 P N - C D - P1 - 2 C

Axis & serial numbers	Table size	Stroke	Ball screw pitch
CXN X axis (w/o cover)	60 60*60mm	100 100mm	P1 1mm
CXC X axis (w/cover)		150 150mm	P2 2mm
		200 200mm	P4 4mm

Connecting cable (optional)	Driver (optional)
Blank Not equipped	Blank Not equipped
2 2m cable*1	C Standard specified by GMT
4 4m cable*1	
6 6m cable*1	

*1 (D-SUB 15 pin female connector + the other side with discrete wirings)

Model Number			CXN60100-S2PN-CD-P1 / CXC60100-S2PN-CD-P1	CXN60100--S2PN-CD-P2 / CXC60100--S2PN-CD-P2	CXN60150-S2PN-CD-P2 / CXC60150-S2PN-CD-P2	CXN60150-S2PN-CD-P4 / CXC60150-S2PN-CD-P4	CXN60200-S2PN-CD-P2 / CXC60200-S2PN-CD-P2	CXN60200-S2PN-CD-P4 / CXC60200-S2PN-CD-P4
Mechanical specifications	Table size		60X60 mm					
	Travel stroke		100 mm		150 mm		200 mm	
	Drive type		Ball screw Ø8 lead 1mm	Ball screw Ø8 lead 2mm	Ball screw Ø8 lead 2mm	Ball screw Ø8 lead 4mm	Ball screw Ø8 lead 2mm	Ball screw Ø8 lead 4mm
	Rail		Circular Linear ball guiding					
	Stage material/Surface treatment		Stainless steel / Electroless nickel plating					
	Main unit weight		N：1.47 Kg / C：1.61 Kg		N：1.8 Kg / C：1.94 Kg		N：2 Kg / C：2.14 Kg	
	Coupling		FAMCS10-5*5					
	Accuracy level		P：Precision grade					
	Wiring method		N：GMT Standard*2					
Precision specifications	Resolution (pulse)	Full / Half	2 μm / 1 μm	4 μm / 2 μm	4 μm / 2 μm	8 μm / 4μm	4 μm / 2 μm	8 μm / 4 μm
	Maximum speed (full step)		20 mm / sec	40 mm / sec	40 mm / sec	80 mm / sec	40 mm / sec	80 mm / sec
	Positioning precision		10 μm		15 μm			
	Repeatability precision		±0.5 μm					
	Load capacity		14 Kgf					
	Missed step		1 μm					
	Parallelism		20 μm					
	Dynamic straightness		4 μm				6 μm	
	Dynamic parallelism		10 μm				15 μm	
Electrical specifications	Motor	Type/Shaft numbers	5-phase stepper / ☐28 double shafts					
		Brand/ Model	Sanyo / SH5281-7211					
	Driver brand/Model		Please refer to motor / driver cross-reference table (page E3)					
	Connector	Stage side connector	15-pin male end connector D-SUB					
		Controller side connector	15-pin female end connector D-SUB (optional)					
	Sensor	Origin sensor	Photoelectric sensor EE-SX4134					
		Limit sensor						
		Origin approximation sensor	N/A					
		Power voltage	24V±10%					
		Control output	NPN open collector output under 24V 8mA					
		Output control	Testing (sensing)：output transistor OFF (closed)					

*2 GMT Standard wiring is defined as the product photo, and not optional available.

X axis

CXN60☐-S2PN-CD-P1

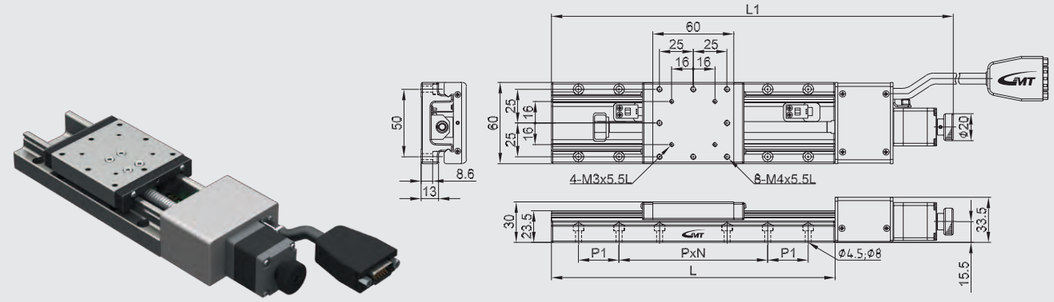

Stroke	L	L1	P	N	P1
100	190	298.5	50	3	N/A
150	240	348.5	25	4	50
200	290	398.5	50	5	N/A

CXC60☐-S2PN-CD-P1

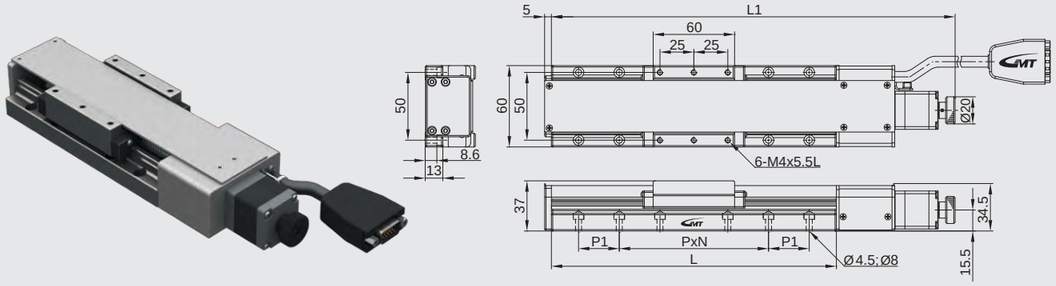

Model description

CXN60□ / CXC60□ series

Material	Drive type	Accuracy level	Wiring method	Motor model	Connector type
S Stainless steel	2 Ball screw	P Precision grade	N GMT Standard	C 5-phase stepper X Not equipped	D D-SUB15 (VGA)

CXN 60 250 - S 2 P N - C D - P2 - 2 C

Axis & serial numbers	Table size	Stroke	Ball screw pitch	Connecting cable (optional)	Driver (optional)
CXN X axis (w/o cover)	60 60*60mm	250 250mm	P2 2mm	Blank Not equipped	Blank Not equipped
CXC X axis (w/cover)		300 300mm	P4 4mm	2 2m cable*1	C Standard specified by GMT
				4 4m cable*1	
				6 6m cable*1	

*1 (D-SUB 15 pin female connector + the other side with discrete wirings)

Model Number			CXN60250-S2PN-CD-P2 / CXC60250-S2PN-CD-P2	CXN60250-S2PN-CD-P4 / CXC60250-S2PN-CD-P4	CXN60300-S2PN-CD-P2 / CXC60300-S2PN-CD-P2	CXN60300-S2PN-CD-P4 / CXC60300-S2PN-CD-P4
Mechanical specifications	Table size		60X60 mm			
	Travel stroke		250 mm		300 mm	
	Drive type		Ball screw Ø8 lead 2mm	Ball screw Ø8 lead 4mm	Ball screw Ø8 lead 2mm	Ball screw Ø8 lead 4mm
	Rail		Circular Linear ball guiding			
	Stage material/Surface treatment		Stainless steel / Electroless nickel plating			
	Main unit weight		N：2.3 Kg / C：2.44 Kg		N：2.6 Kg / C：2.74 Kg	
	Coupling		FAMCS10-5*5			
	Accuracy level		P：Precision grade			
	Wiring method		N：GMT Standard*2			
Precision specifications	Resolution (pulse)	Full / Half	4 μm / 2 μm	8 μm / 4 μm	4 μm / 2 μm	8 μm / 4μm
	Maximum speed (full step)		40 mm / sec	80 mm / sec	40 mm / sec	80 mm / sec
	Positioning precision		25 μm			
	Repeatability precision		±0.5 μm			
	Load capacity		14 Kgf			
	Missed step		1 μm			
	Parallelism		20 μm			
	Dynamic straightness		6 μm			
	Dynamic parallelism		25 μm			
Electrical specifications	Motor	Type/Shaft numbers	5-phase stepper / □28 double shafts			
		Brand/ Model	Sanyo / SH5281-7211			
	Driver brand/Model		Please refer to motor / driver cross-reference table (page E3)			
	Connector	Stage side connector	15-pin male end connector D-SUB			
		Controller side connector	15-pin female end connector D-SUB (optional)			
	Sensor	Origin sensor	Photoelectric sensor EE-SX4134			
		Limit sensor				
		Origin approximation sensor	N/A			
		Power voltage	24V±10%			
		Control output	NPN open collector output under 24V 8mA			
		Output control	Testing (sensing)：output transistor OFF (closed)			

*2 GMT Standard wiring is defined as the product photo, and not optional available.

X axis

CXN60□-S2PN-CD-P1

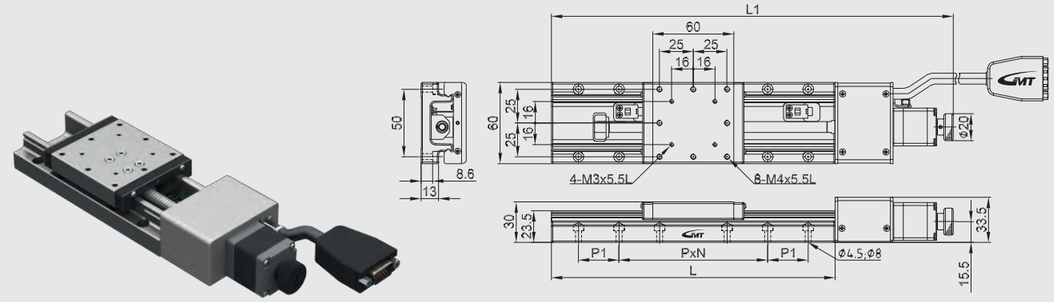

Stroke	L	L1	P	N	P1
250	340	448.5	50	5	N/A
300	390	498.5	50	7	N/A

CXC60□-S2PN-CD-P1

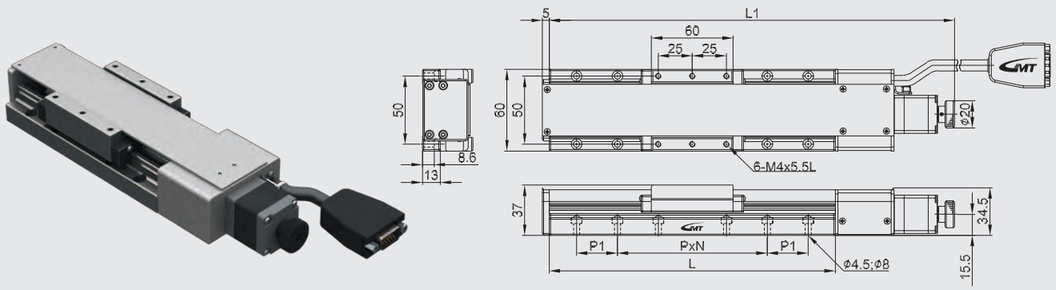

Model description

CXN80□ / CXC80□ series

Material	Drive type	Accuracy level	Wiring method	Motor model	Connector type
S Stainless steel	2 Ball screw	P Precision grade	N GMT Standard	C 5-phase stepper X Not equipped	D D-SUB15 (VGA)

CXN 80 30 - S 2 P N - C D - P1 - 2 C

Axis & serial numbers	Table size	Stroke	Ball screw pitch	Connecting cable (optional)	Driver (optional)
CXN X axis (w/o cover)	80 80*80mm	30 30mm	P1 1mm	Blank Not equipped	Blank Not equipped
CXC X axis (w/cover)		50 50mm	P2 2mm	2 2m cable*1	C Standard specified by GMT
		75 75mm		4 4m cable*1	
				6 6m cable*1	

*1 (D-SUB 15 pin female connector + the other side with discrete wirings)

Model Number			CXN8030-S2PN-CD-P1 / CXC8030-S2PN-CD-P1	CXN8030-S2PN-CD-P2 / CXC8030-S2PN-CD-P2	CXN8050-S2PN-CD-P1 / CXC8050-S2PN-CD-P1	CXN8050-S2PN-CD-P2 / CXC8050-S2PN-CD-P2	CXN8075-S2PN-CD-P1 / CXC8075-S2PN-CD-P1	CXN8075-S2PN-CD-P2 / CXC8075-S2PN-CD-P2
Mechanical specifications	Table size		80X80 mm					
	Travel stroke		30 mm		50 mm		75 mm	
	Drive type		Ball screw Ø8 lead 1mm	Ball screw Ø8 lead 2mm	Ball screw Ø8 lead 1mm	Ball screw Ø8 lead 2mm	Ball screw Ø8 lead 1mm	Ball screw Ø8 lead 2mm
	Rail		Circular Linear ball guiding					
	Stage material/Surface treatment		Stainless steel / Electroless nickel plating					
	Main unit weight		N：1.5 Kg / C：1.79 Kg		N：1.68 Kg / C：1.86 Kg		N：1.84 Kg / C：2.03 Kg	
	Coupling		FAMCS10-5*5					
	Accuracy level		P：Precision grade					
	Wiring method		N：GMT Standard*2					
Precision specifications	Resolution (pulse)	Full / Half	2 μm / 1 μm	4 μm / 2 μm	2 μm / 1 μm	4 μm / 2 μm	2 μm / 1 μm	4 μm / 2 μm
	Maximum speed (full step)		20 mm / sec	40 mm / sec	20 mm / sec	40 mm / sec	20 mm / sec	40 mm / sec
	Positioning precision		5 μm				7 μm	
	Repeatability precision		±0.5 μm					
	Load capacity		16 Kgf					
	Missed step		1 μm					
	Parallelism		20 μm					
	Dynamic straightness		2 μm					
	Dynamic parallelism		10 μm					
Electrical specifications	Motor	Type/Shaft numbers	5-phase stepper / □28 double shafts					
		Brand/ Model	Sanyo / SH5281-7211					
	Driver brand/Model		Please refer to motor / driver cross-reference table (page E3)					
	Connector	Stage side connector	15-pin male end connector D-SUB					
		Controller side connector	15-pin female end connector D-SUB (optional)					
	Sensor	Origin sensor	Photoelectric sensor EE-SX4134					
		Limit sensor						
		Origin approximation sensor	N/A					
		Power voltage	24V±10%					
		Control output	NPN open collector output under 24V 8mA					
		Output control	Testing (sensing)：output transistor OFF (closed)					

*2 GMT Standard wiring is defined as the product photo, and not optional available.

X axis

CXN80□-S2PN-CD-P1

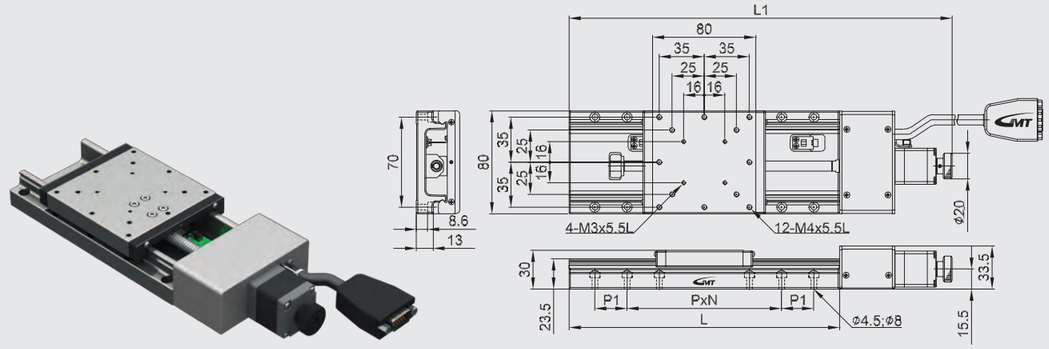

Stroke	L	L1	P	N	P1
30	140	229	70	1	25
50	160	247.5	35	4	35
75	185	272.5	35	4	35

CXC80□-S2PN-CD-P1

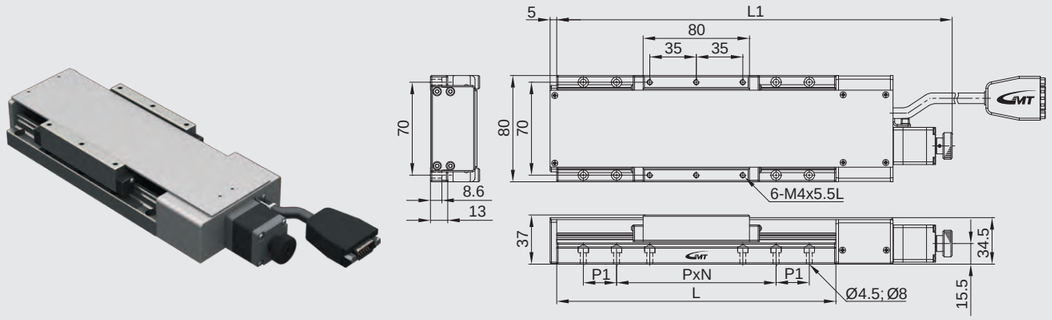

Model description

CXN80□ / CXC80□ series

Material	Drive type	Accuracy level	Wiring method	Motor model	Connector type
S Stainless steel	2 Ball screw	P Precision grade	N GMT Standard	C 5-phase stepper X Not equipped	D D-SUB15 (VGA)

CXN 80 100 - S 2 P N - C D - P1 - 2 C

Axis & serial numbers	Table size	Stroke	Ball screw pitch	Connecting cable (optional)	Driver (optional)
CXN X axis (w/o cover)	80 80*80mm	100 100mm	P1 1mm	Blank Not equipped	Blank Not equipped
CXC X axis (w/cover)		150 150mm	P2 2mm	2 2m cable*1	C Standard specified by GMT
		200 200mm	P4 4mm	4 4m cable*1	
				6 6m cable*1	

*1 (D-SUB 15 pin female connector + the other side with discrete wirings)

Model Number			CXN80100-S2PN-CD-P1 CXC80100-S2PN-CD-P1	CXN80100--S2PN-CD-P2 CXC80100--S2PN-CD-P2	CXN80150-S2PN-CD-P2 CXC80150-S2PN-CD-P2	CXN80150-S2PN-CD-P4 CXC80150-S2PN-CD-P4	CXN80200-S2PN-CD-P2 CXC80200-S2PN-CD-P2	CXN80200-S2PN-CD-P4 CXC80200-S2PN-CD-P4
Mechanical specifications	Table size		80X80 mm					
	Travel stroke		100 mm		150 mm		200 mm	
	Drive type		Ball screw Ø8 lead 1mm	Ball screw Ø8 lead 2mm	Ball screw Ø8 lead 2mm	Ball screw Ø8 lead 4mm	Ball screw Ø8 lead 2mm	Ball screw Ø8 lead 4mm
	Rail		Circular Linear ball guiding					
	Stage material/Surface treatment		Stainless steel / Electroless nickel plating					
	Main unit weight		N：2.02 Kg / C：2.2 Kg		N：2.32 Kg / C：2.5 Kg		N：2.6 Kg / C：2.78 Kg	
	Coupling		FAMCS10-5*5					
	Accuracy level		P：Precision grade					
	Wiring method		N：GMT Standard*2					
Precision specifications	Resolution (pulse)	Full / Half	2 μm / 1 μm	4 μm / 2 μm	4 μm / 2 μm	8 μm / 4 μm	4 μm / 2 μm	8 μm / 4 μm
	Maximum speed (full step)		20 mm / sec	40 mm / sec	40 mm / sec	80 mm / sec	40 mm / sec	80 mm / sec
	Positioning precision		10 μm		15 μm			
	Repeatability precision		±0.5 μm					
	Load capacity		16 Kgf					
	Missed step		1 μm					
	Parallelism		20 μm					
	Dynamic straightness		4 μm				6 μm	
	Dynamic parallelism		10 μm				15 μm	
Electrical specifications	Motor	Type/Shaft numbers	5-phase stepper / □28 double shafts					
		Brand/ Model	Sanyo / SH5281-7211					
	Driver brand/Model		Please refer to motor / driver cross-reference table (page E3)					
	Connector	Stage side connector	15-pin male end connector D-SUB					
		Controller side connector	15-pin female end connector D-SUB (optional)					
	Sensor	Origin sensor	Photoelectric sensor EE-SX4134					
		Limit sensor						
		Origin approximation sensor	N/A					
		Power voltage	24V±10%					
		Control output	NPN open collector output under 24V 8mA					
		Output control	Testing (sensing)：output transistor OFF (closed)					

*2 GMT Standard wiring is defined as the product photo, and not optional available.

X axis

CXN80□-S2PN-CD-P1

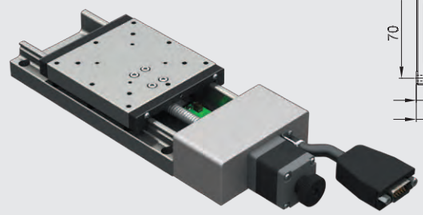

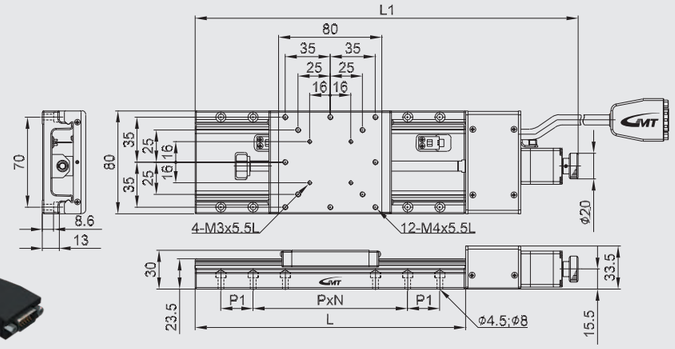

Stroke	L	L1	P	N	P1
100	210	317.5	70	1	35
150	260	367.5	70	3	N/A
200	310	417.5	70	3	35

CXC80□-S2PN-CD-P1

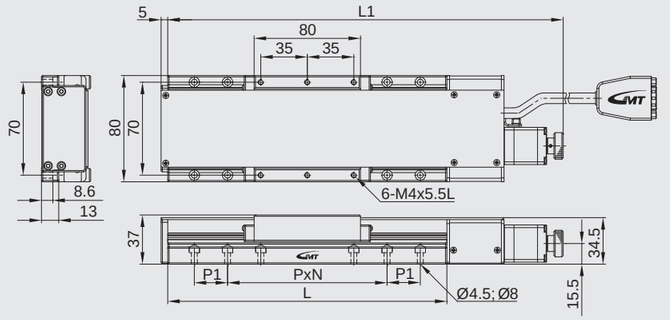

Model description

CXN80☐ / CXC80☐ series

Material	Drive type	Accuracy level	Wiring method	Motor model	Connector type
S Stainless steel	2 Ball screw	P Precision grade	N GMT Standard	C 5-phase stepper X Not equipped	D D-SUB15 (VGA)

CXN 80 250 - S 2 P N - C D - P2 - 2 C

Axis & serial numbers	Table size	Stroke	Ball screw pitch	Connecting cable (optional)	Driver (optional)
CXN X axis (w/o cover) CXC X axis (w/cover)	80 80*80mm	250 250mm 300 300mm	P2 2mm P4 4mm	Blank Not equipped 2 2m cable*1 4 4m cable*1 6 6m cable*1	Blank Not equipped C Standard specified by GMT

*1 (D-SUB 15 pin female connector + the other side with discrete wirings)

Model Number			CXN80250-S2PN-CD-P2 / CXC80250-S2PN-CD-P2	CXN80250-S2PN-CD-P4 / CXC80250-S2PN-CD-P4	CXN80300-S2PN-CD-P2 / CXC80300-S2PN-CD-P2	CXN80300-S2PN-CD-P4 / CXC80300-S2PN-CD-P4
Mechanical specifications	Table size		80X80 mm			
	Travel stroke		250 mm		300 mm	
	Drive type		Ball screw Ø8 lead 2mm	Ball screw Ø8 lead 4mm	Ball screw Ø8 lead 2mm	Ball screw Ø8 lead 4mm
	Rail		Circular Linear ball guiding			
	Stage material/Surface treatment		Stainless steel / Electroless nickel plating			
	Main unit weight		N：2.9 Kg / C：3.08 Kg		N：3.2 Kg / C：3.38 Kg	
	Coupling		FAMCS10-5*5			
	Accuracy level		P：Precision grade			
	Wiring method		N：GMT Standard*2			
Precision specifications	Resolution (pulse)	Full / Half	4 μm / 2 μm	8 μm / 4 μm	4 μm / 2 μm	8 μm / 4μm
	Maximum speed (full step)		40 mm / sec	80 mm / sec	40 mm / sec	80 mm / sec
	Positioning precision		25 μm			
	Repeatability precision		±0.5 μm			
	Load capacity		16 Kgf			
	Missed step		1 μm			
	Parallelism		20 μm			
	Dynamic straightness		6 μm			
	Dynamic parallelism		25 μm			
Electrical specifications	Motor	Type/Shaft numbers	5-phase stepper / ☐28 double shafts			
		Brand/ Model	Sanyo / SH5281-7211			
	Driver brand/Model		Please refer to motor / driver cross-reference table (page E3)			
	Connector	Stage side connector	15-pin male end connector D-SUB			
		Controller side connector	15-pin female end connector D-SUB (optional)			
	Sensor	Origin sensor	Photoelectric sensor EE-SX4134			
		Limit sensor				
		Origin approximation sensor	N/A			
		Power voltage	24V±10%			
		Control output	NPN open collector output under 24V 8mA			
		Output control	Testing (sensing)：output transistor OFF (closed)			

*2 GMT Standard wiring is defined as the product photo, and not optional available.

X axis

CXN80☐-S2PN-CD-P1

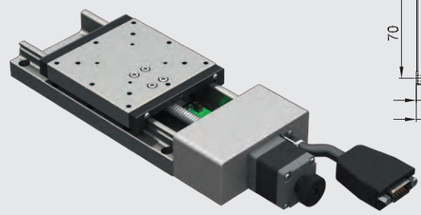

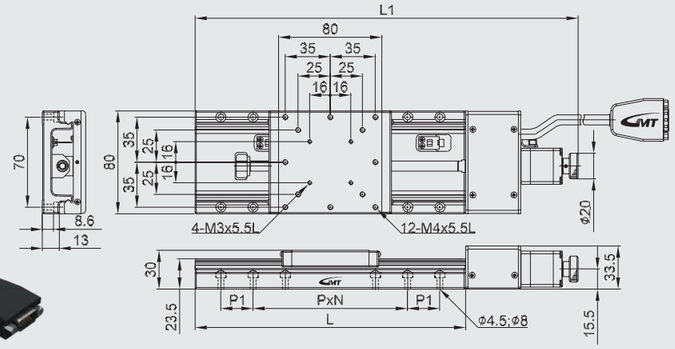

Stroke	L	L1	P	N	P1
250	360	467.5	70	4	35
300	410	517.5	70	5	N/A

CXC80☐-S2PN-CD-P1

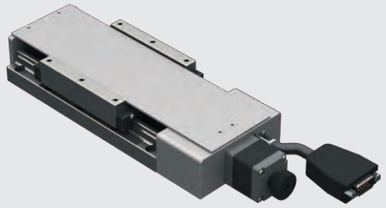

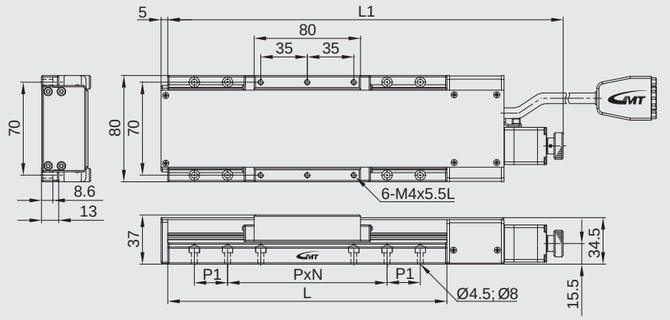

Model description

CYN50☐ / CYC50☐ series

Material	Drive type	Accuracy level	Wiring method	Motor model	Connector type
S Stainless steel	2 Ball screw	P Precision grade	N GMT Standard	C 5-phase stepper X Not equipped	D D-SUB15 (VGA)

CYN 50 30 - S 2 P N - C D - P1 - 2 C

Axis & serial numbers	Table size	Stroke	Ball screw pitch	Connecting cable (optional)	Driver (optional)
CYN XY axis (w/o cover) CYC XY axis (w/cover)	50 50*50mm	30 30mm 50 50mm 75 75mm	P1 1mm P2 2mm	Blank Not equipped 2 2m cable*1 4 4m cable*1 6 6m cable*1	Blank Not equipped C Standard specified by GMT

*1 (D-SUB 15 pin female connector + the other side with discrete wirings)

Model Number			CYN5030-S2PN-CD-P1	CYN5030-S2PN-CD-P2	CYN5050-S2PN-CD-P1	CYN5050-S2PN-CD-P2	CYN5075-S2PN-CD-P1	CYN5075-S2PN-CD-P2
			CYC5030-S2PN-CD-P1	CYC5030-S2PN-CD-P2	CYC5050-S2PN-CD-P1	CYC5050-S2PN-CD-P2	CYC5075-S2PN-CD-P1	CYC5075-S2PN-CD-P2
Mechanical specifications	Table size		50X50 mm					
	Travel stroke		30 mm		50 mm		75 mm	
	Drive type		Ball screw Ø8 lead 1mm	Ball screw Ø8 lead 2mm	Ball screw Ø8 lead 1mm	Ball screw Ø8 lead 2mm	Ball screw Ø8 lead 1mm	Ball screw Ø8 lead 2mm
	Rail		Circular Linear ball guiding					
	Stage material/Surface treatment		Stainless steel / Electroless nickel plating					
	Main unit weight		N：1.94 Kg / C：2.12 Kg		N：2.2 Kg / C：2.34 Kg		N：2.48 Kg / C：2.58 Kg	
	Coupling		FAMCS10-5*5					
	Accuracy level		P：Precision grade					
	Wiring method		N：GMT Standard*2					
Precision specifications	Resolution (pulse)	Full / Half	2 μm / 1 μm	4 μm / 2 μm	2 μm / 1 μm	4 μm / 2 μm	2 μm / 1 μm	4 μm / 2 μm
	Maximum speed (full step)		20 mm / sec	40 mm / sec	20 mm / sec	40 mm / sec	20 mm / sec	40 mm / sec
	Positioning precision		5 μm				7 μm	
	Repeatability precision		±0.5 μm					
	Load capacity		8 Kgf					
	Missed step		1 μm					
	Parallelism		15 μm					
	Dynamic straightness		2 μm					
	Dynamic parallelism		10 μm					
Electrical specifications	Motor	Type/Shaft numbers	5-phase stepper / ☐28 double shafts					
		Brand/ Model	Sanyo / SH5281-7211					
	Driver brand/Model		Please refer to motor / driver cross-reference table (page E3)					
	Connector	Stage side connector	15-pin male end connector D-SUB					
		Controller side connector	15-pin female end connector D-SUB (optional)					
	Sensor	Origin sensor	Photoelectric sensor EE-SX4134					
		Limit sensor						
		Origin approximation sensor	N/A					
		Power voltage	24V±10%					
		Control output	NPN open collector output under 24V 8mA					
		Output control	Testing (sensing)：output transistor OFF (closed)					

※Precision specifications of double axes with stroke length in 100mm, 150mm, 200mm, 250mm, and 300 mm will be different from single axis. Please consult to regional sales for more detail information.

*2 GMT Standard wiring is defined as the product photo, and not optional available.

XY axis

CYN50☐-S2PN-CD-P1

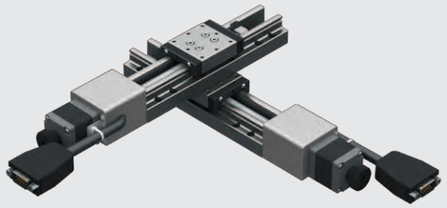

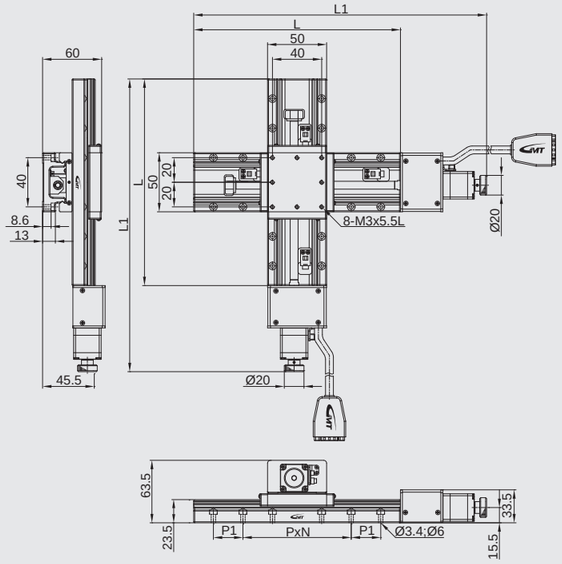

Stroke	L	L1	P	N	P1
30	110	197.5	40	1	20
50	120	217.5	40	3	N/A
75	145	242.5	40	3	N/A

CYC50☐-S2PN-CD-P1

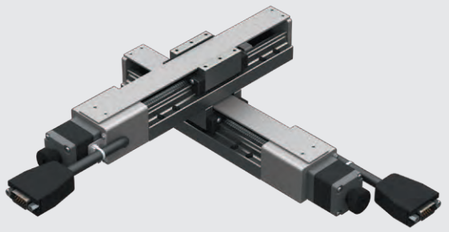

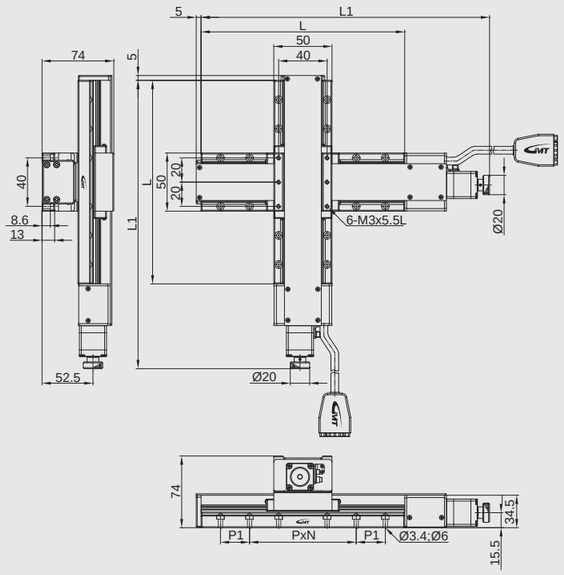

Model description

CYN60☐ / CYC60☐ series

Material	Drive type	Accuracy level	Wiring method	Motor model	Connector type
S Stainless steel	2 Ball screw	P Precision grade	N GMT Standard	C 5-phase stepper X Not equipped	D D-SUB15 (VGA)

CYN 60 30 - S 2 P N - C D - P1 - 2 C

Axis & serial numbers	Table size	Stroke	Ball screw pitch	Connecting cable (optional)	Driver (optional)
CYN XY axis (w/o cover)	60 60*60mm	50 50mm	P1 1mm	Blank Not equipped	Blank Not equipped
CYC XY axis (w/cover)		75 75mm	P2 2mm	2 2m cable*1	C Standard specified by GMT
				4 4m cable*1	
				6 6m cable*1	

*1 (D-SUB 15 pin female connector + the other side with discrete wirings)

Model Number			CYN6030-S2PN-CD-P1 CYC6030-S2PN-CD-P1	CYN6030-S2PN-CD-P2 CYC6030-S2PN-CD-P2	CYN6050-S2PN-CD-P1 CYC6050-S2PN-CD-P1	CYN6050-S2PN-CD-P2 CYC6050-S2PN-CD-P2	CYN6075-S2PN-CD-P1 CYC6075-S2PN-CD-P1	CYN6075-S2PN-CD-P2 CYC6075-S2PN-CD-P2
Mechanical specifications	Table size		60X60 mm					
	Travel stroke		30 mm		50 mm		75 mm	
	Drive type		Ball screw Ø8 lead 1mm	Ball screw Ø8 lead 2mm	Ball screw Ø8 lead 1mm	Ball screw Ø8 lead 2mm	Ball screw Ø8 lead 1mm	Ball screw Ø8 lead 2mm
	Rail		Circular Linear ball guiding					
	Stage material/Surface treatment		Stainless steel / Electroless nickel plating					
	Main unit weight		N：2.2 Kg / C：2.58 Kg		N：2.38 Kg / C：2.66 Kg		N：2.6 Kg / C：2.88 Kg	
	Coupling		FAMCS10-5*5					
	Accuracy level		P：Precision grade					
	Wiring method		N：GMT Standard*2					
Precision specifications	Resolution (pulse)	Full / Half	2 μm / 1 μm	4 μm / 2 μm	2 μm / 1 μm	4 μm / 2 μm	2 μm / 1 μm	4 μm / 2 μm
	Maximum speed (full step)		20 mm / sec	40 mm / sec	20 mm / sec	40 mm / sec	20 mm / sec	40 mm / sec
	Positioning precision		5 μm				7 μm	
	Repeatability precision		±0.5 μm					
	Load capacity		10 Kgf					
	Missed step		1 μm					
	Parallelism		15 μm					
	Dynamic straightness		2 μm					
	Dynamic parallelism		10 μm					
Electrical specifications	Motor	Type/Shaft numbers	5-phase stepper / ☐28 double shafts					
		Brand/ Model	Sanyo / SH5281-7211					
	Driver brand/Model		Please refer to motor / driver cross-reference table (page E3)					
	Connector	Stage side connector	15-pin male end connector D-SUB					
		Controller side connector	15-pin female end connector D-SUB (optional)					
	Sensor	Origin sensor	Photoelectric sensor EE-SX4134					
		Limit sensor						
		Origin approximation sensor	N/A					
		Power voltage	24V±10%					
		Control output	NPN open collector output under 24V 8mA					
		Output control	Testing (sensing)：output transistor OFF (closed)					

※Precision specifications of double axes with stroke length in 100mm, 150mm, 200mm, 250mm, and 300 mm will be different from single axis. Please consult to regional sales for more detail information.

*2 GMT Standard wiring is defined as the product photo, and not optional available.

XY axis

CYN60☐-S2PN-CD-P1

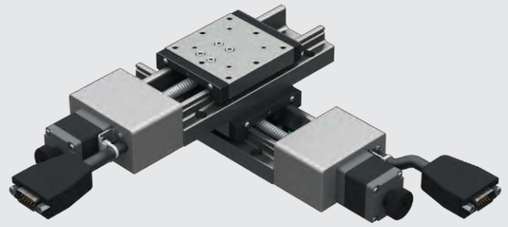

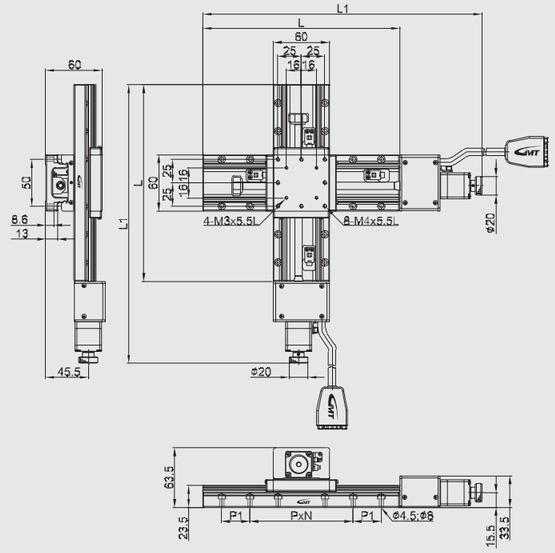

Stroke	L	L1	P	N	P1
30	120	209	50	1	25
50	140	229	50	1	25
75	165	254	50	3	N/A

CYC60☐-S2PN-CD-P1

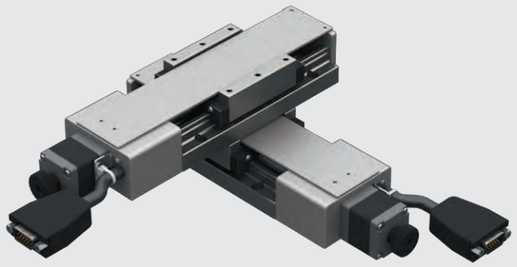

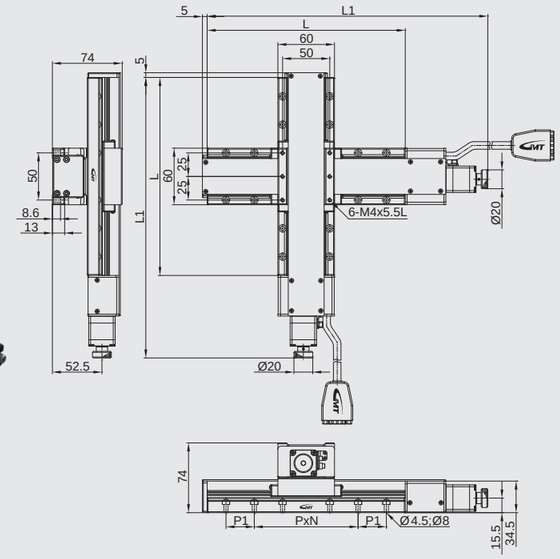

Model description

CYN80☐ / CYC80☐series

Material	Drive type	Accuracy level	Wiring method	Motor model	Connector type
S Stainless steel	2 Ball screw	P Precision grade	N GMT Standard	C 5-phase stepper X Not equipped	D D-SUB15 (VGA)

CYN 80 30 - S 2 P N - C D - P1 - 2 C

Axis & serial numbers	Table size	Stroke	Ball screw pitch	Connecting cable (optional)	Driver (optional)
CYN XY axis (w/o cover)	80 80*80mm	30 30mm	P1 1mm	Blank Not equipped	Blank Not equipped
CYC XY axis (w/cover)		50 50mm	P2 2mm	2 2m cable*1	C Standard specified by GMT
		75 75mm		4 4m cable*1	
				6 6m cable*1	

*1 (D-SUB 15 pin female connector + the other side with discrete wirings)

Model Number			CYN8030-S2PN-CD-P1 CYC8030-S2PN-CD-P1	CYN8030-S2PN-CD-P2 CYC8030-S2PN-CD-P2	CYN8050-S2PN-CD-P1 CYC8050-S2PN-CD-P1	CYN8050-S2PN-CD-P2 CYC8050-S2PN-CD-P2	CYN8075-S2PN-CD-P1 CYC8075-S2PN-CD-P1	CYN8075-S2PN-CD-P2 CYC8075-S2PN-CD-P2
Mechanical specifications	Table size		80X80 mm					
	Travel stroke		30 mm		50 mm		75 mm	
	Drive type		Ball screw Ø8 lead 1mm	Ball screw Ø8 lead 2mm	Ball screw Ø8 lead 1mm	Ball screw Ø8 lead 2mm	Ball screw Ø8 lead 1mm	Ball screw Ø8 lead 2mm
	Rail		Circular Linear ball guiding					
	Stage material/Surface treatment		Stainless steel / Electroless nickel plating					
	Main unit weight		N：1.94 Kg / C：2.12 Kg		N：2.2 Kg / C：2.34 Kg		N：2.48 Kg / C：2.58 Kg	
	Coupling		FAMCS10-5*5					
	Accuracy level		P：Precision grade					
	Wiring method		N：GMT Standard*2					
Precision specifications	Resolution (pulse)	Full / Half	2 μm / 1 μm	4 μm / 2 μm	2 μm / 1 μm	4 μm / 2 μm	2 μm / 1 μm	4 μm / 2 μm
	Maximum speed (full step)		20 mm / sec	40 mm / sec	20 mm / sec	40 mm / sec	20 mm / sec	40 mm / sec
	Positioning precision		5 μm				7 μm	
	Repeatability precision		±0.5 μm					
	Load capacity		14 Kgf					
	Missed step		1 μm					
	Parallelism		20 μm					
	Dynamic straightness		2 μm					
	Dynamic parallelism		10 μm					
Electrical specifications	Motor	Type/Shaft numbers	5-phase stepper / ☐28 double shafts					
		Brand/ Model	Sanyo / SH5281-7211					
	Driver brand/Model		Please refer to motor / driver cross-reference table (page E3)					
	Connector	Stage side connector	15-pin male end connector D-SUB					
		Controller side connector	15-pin female end connector D-SUB (optional)					
	Sensor	Origin sensor	Photoelectric sensor EE-SX4134					
		Limit sensor						
		Origin approximation sensor	N/A					
		Power voltage	24V±10%					
		Control output	NPN open collector output under 24V 8mA					
		Output control	Testing (sensing)：output transistor OFF (closed)					

※Precision specifications of double axes with stroke length in 100mm, 150mm, 200mm, 250mm, and 300 mm will be different from single axis. Please consult to regional sales for more detail information.

*2 GMT Standard wiring is defined as the product photo, and not optional available.

XY axis

CYN80☐-S2PN-CD-P1

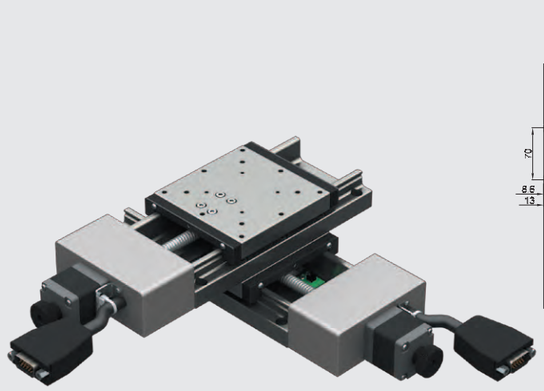

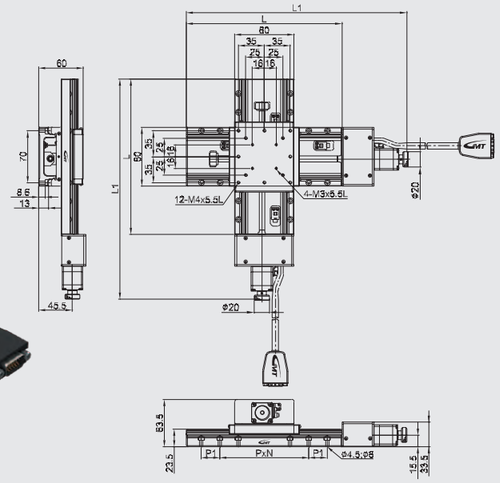

Stroke	L	L1	P	N	P1
30	140	229	70	1	25
50	160	247.5	35	4	35
75	185	272.5	35	4	35

CYC80☐-S2PN-CD-P1

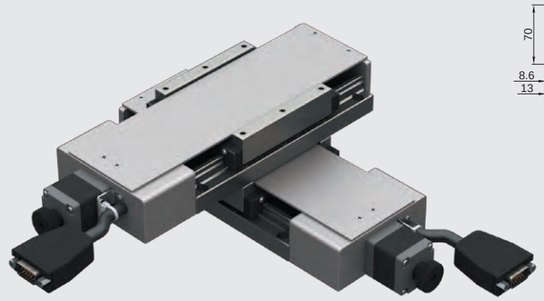

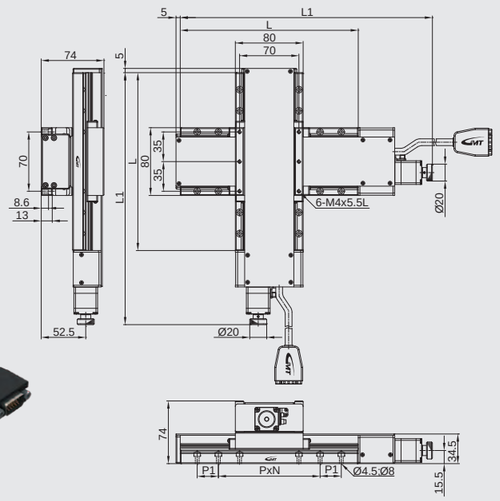

Model description

CZLN50☐ / CZLC50☐series

Material	Drive type	Accuracy level	Wiring method	Motor model	Connector type
S Stainless steel	2 Ball screw	P Precision grade	N GMT Standard	C 5-phase stepper X Not equipped	D D-SUB15 (VGA)

CZLN 50 50 - S 2 P N - C D - P1 - 2 C

Axis & serial numbers	Table size	Stroke	Ball screw pitch	Connecting cable (optional)	Driver (optional)
CZLN Z axis (w/o cover) CZLC Z axis (w/cover)	50 50*50mm	50 50mm 75 75mm	P1 1mm P2 2mm	Blank Not equipped 2 2m cable*1 4 4m cable*1 6 6m cable*1	Blank Not equipped C Standard specified by GMT

*1 (D-SUB 15 pin female connector + the other side with discrete wirings)

Model Number			CZLN5050-S2PN-CD-P1	CZLN5050-S2PN-CD-P2	CZLN5075-S2PN-CD-P1	CZLN5075-S2PN-CD-P2
			CZLC5050-S2PN-CD-P1	CZLC5050-S2PN-CD-P2	CZLC5075-S2PN-CD-P1	CZLC5075-S2PN-CD-P2
Mechanical specifications	Table size		50X50 mm			
	Travel stroke		50 mm		75 mm	
	Drive type		Ball screw Ø8 lead 1mm	Ball screw Ø8 lead 2mm	Ball screw Ø8 lead 1mm	Ball screw Ø8 lead 2mm
	Rail		Circular Linear ball guiding			
	Stage material/Surface treatment		Stainless steel / Electroless nickel plating			
	Main unit weight		N：1.35 Kg / C：2.05 Kg		N：1.49 Kg / C：1.54 Kg	
	Coupling		FAMCS10-5*5			
	Accuracy level		P：Precision grade			
	Wiring method		N：GMT Standard*2			
Precision specifications	Resolution (pulse)	Full / Half	2 μm / 1 μm	4 μm / 2 μm	2 μm / 1 μm	4 μm / 2 μm
	Maximum speed (full step)		20 mm / sec	40 mm / sec	20 mm / sec	40 mm / sec
	Positioning precision		5 μm		7 μm	
	Repeatability precision		±0.5 μm			
	Load capacity		7 Kgf			
	Missed step		1 μm			
	Parallelism		15 μm			
	Dynamic straightness		2 μm			
	Dynamic parallelism		10 μm			
Electrical specifications	Motor	Type/Shaft numbers	5-phase stepper / ☐28 double shafts			
		Brand/ Model	Sanyo / SH5281-7211			
	Driver brand/Model		Please refer to motor / driver cross-reference table (page E3)			
	Connector	Stage side connector	15-pin male end connector D-SUB			
		Controller side connector	15-pin female end connector D-SUB (optional)			
	Sensor	Origin sensor	Photoelectric sensor EE-SX4134			
		Limit sensor				
		Origin approximation sensor	N/A			
		Power voltage	24V±10%			
		Control output	NPN open collector output under 24V 8mA			
		Output control	Testing (sensing)：output transistor OFF (closed)			

*2 GMT Standard wiring is defined as the product photo, and not optional available.

Z axis

CZLN50☐-S2PN-CD-P1

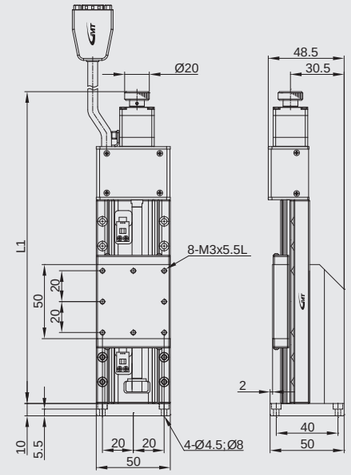

Stroke	L	L1
50	120	227.5
75	145	250

CZLC50☐-S2PN-CD-P1

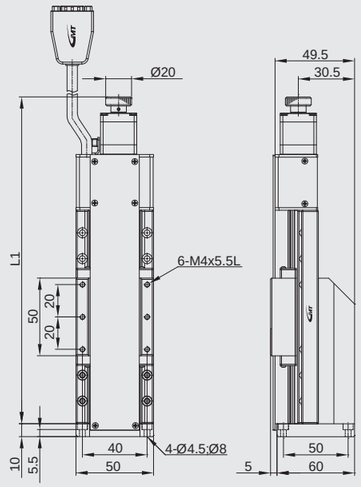

Model description

CZLN60☐ / CZLC60☐series

Material	Drive type	Accuracy level	Wiring method	Motor model	Connector type
S Stainless steel	2 Ball screw	P Precision grade	N GMT Standard	C 5-phase stepper X Not equipped	D D-SUB15 (VGA)

CZLN 60 50 - S 2 P N - C D - P1 - 2 C

Axis & serial numbers	Table size	Stroke	Ball screw pitch	Connecting cable (optional)	Driver (optional)
CZLN Z axis (w/o cover)	60 60*60mm	50 50mm	P1 1mm	Blank Not equipped	Blank Not equipped
CZLC Z axis (w/cover)		75 75mm	P2 2mm	2 2m cable*1	C Standard specified by GMT
				4 4m cable*1	
				6 6m cable*1	

*1 (D-SUB 15 pin female connector + the other side with discrete wirings)

Model Number			CZLN6050-S2PN-CD-P1 / CZLC6050-S2PN-CD-P1	CZLN6050-S2PN-CD-P2 / CZLC6050-S2PN-CD-P2	CZLN6075-S2PN-CD-P1 / CZLC6075-S2PN-CD-P1	CZLN6075-S2PN-CD-P2 / CZLC6075-S2PN-CD-P2
Mechanical specifications	Table size		60X60 mm			
	Travel stroke		50 mm		75 mm	
	Drive type		Ball screw Ø8 lead 1mm	Ball screw Ø8 lead 2mm	Ball screw Ø8 lead 1mm	Ball screw Ø8 lead 2mm
	Rail		Circular Linear ball guiding			
	Stage material/Surface treatment		Stainless steel / Electroless nickel plating			
	Main unit weight		N：1.91 Kg / C：3.22 Kg		N：2.05 Kg / C：2.1 Kg	
	Coupling		FAMCS10-5*5			
	Accuracy level		P：Precision grade			
	Wiring method		N：GMT Standard*2			
Precision specifications	Resolution (pulse)	Full / Half	2 μm / 1 μm	4 μm / 2 μm	2 μm / 1 μm	4 μm / 2 μm
	Maximum speed (full step)		20 mm / sec	40 mm / sec	20 mm / sec	40 mm / sec
	Positioning precision		5 μm		7 μm	
	Repeatability precision		±0.5 μm			
	Load capacity		9 Kgf			
	Missed step		1 μm			
	Parallelism		20 μm			
	Dynamic straightness		2 μm			
	Dynamic parallelism		10 μm			
Electrical specifications	Motor	Type/Shaft numbers	5-phase stepper / ☐28 double shafts			
		Brand/ Model	Sanyo / SH5281-7211			
	Driver brand/Model		Please refer to motor / driver cross-reference table (page E3)			
	Connector	Stage side connector	15-pin male end connector D-SUB			
		Controller side connector	15-pin female end connector D-SUB (optional)			
	Sensor	Origin sensor	Photoelectric sensor EE-SX4134			
		Limit sensor				
		Origin approximation sensor	N/A			
		Power voltage	24V±10%			
		Control output	NPN open collector output under 24V 8mA			
		Output control	Testing (sensing)：output transistor OFF (closed)			

*2 GMT Standard wiring is defined as the product photo, and not optional available.

Z axis

CZLN60☐-S2PN-CD-P1

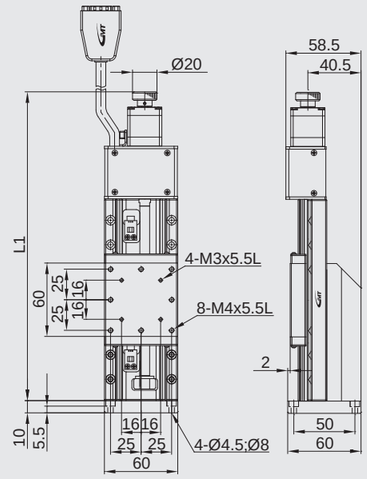

Stroke	L	L1
50	140	233
75	165	262

CZLC60☐-S2PN-CD-P1

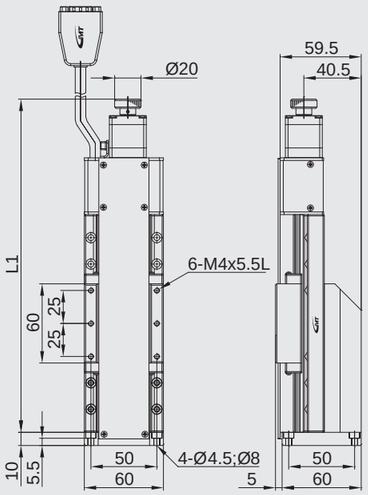

Model description

CZLN80☐ / CZLC80☐series

Material	Drive type	Accuracy level	Wiring method	Motor model	Connector type
S Stainless steel	2 Ball screw	P Precision grade	N GMT Standard	C 5-phase stepper X Not equipped	D D-SUB15 (VGA)

CZLN 80 50 - S 2 P N - C D - P1 - 2 C

Axis & serial numbers	Table size	Stroke	Ball screw pitch	Connecting cable (optional)	Driver (optional)
CZLN Z axis (w/o cover) CZLC Z axis (w/cover)	80 80*80mm	50 50mm 75 75mm	P1 1mm P2 2mm	Blank Not equipped 2 2m cable*1 4 4m cable*1 6 6m cable*1	Blank Not equipped C Standard specified by GMT

*1 (D-SUB 15 pin female connector + the other side with discrete wirings)

Model Number			CZLN8050-S2PN-CD-P1 / CZLC8050-S2PN-CD-P1	CZLN8050-S2PN-CD-P2 / CZLC8050-S2PN-CD-P2	CZLN8075-S2PN-CD-P1 / CZLC8075-S2PN-CD-P1	CZLN8075-S2PN-CD-P2 / CZLC8075-S2PN-CD-P2
Mechanical specifications	Table size		80X80 mm			
	Travel stroke		50 mm		75 mm	
	Drive type		Ball screw Ø8 lead 1mm	Ball screw Ø8 lead 2mm	Ball screw Ø8 lead 1mm	Ball screw Ø8 lead 2mm
	Rail		Circular Linear ball guiding			
	Stage material/Surface treatment		Stainless steel / Electroless nickel plating			
	Main unit weight		N：2.58 Kg / C：2.76 Kg		N：2.74 Kg / C：2.93 Kg	
	Coupling		FAMCS10-5*5			
	Accuracy level		P：Precision grade			
	Wiring method		N：GMT Standard*2			
Precision specifications	Resolution (pulse)	Full / Half	2 μm / 1 μm	4 μm / 2 μm	2 μm / 1 μm	4 μm / 2 μm
	Maximum speed (full step)		20 mm / sec	40 mm / sec	20 mm / sec	40 mm / sec
	Positioning precision		5 μm		7 μm	
	Repeatability precision		±0.5 μm			
	Load capacity		9 Kgf			
	Missed step		1 μm			
	Parallelism		20 μm			
	Dynamic straightness		2 μm			
	Dynamic parallelism		10 μm			
Electrical specifications	Motor	Type/Shaft numbers	5-phase stepper / ☐28 double shafts			
		Brand/ Model	Sanyo / SH5281-7211			
	Driver brand/Model		Please refer to motor / driver cross-reference table (page E3)			
	Connector	Stage side connector	15-pin male end connector D-SUB			
		Controller side connector	15-pin female end connector D-SUB (optional)			
	Sensor	Origin sensor	Photoelectric sensor EE-SX4134			
		Limit sensor				
		Origin approximation sensor	N/A			
		Power voltage	24V±10%			
		Control output	NPN open collector output under 24V 8mA			
		Output control	Testing (sensing)：output transistor OFF (closed)			

*2 GMT Standard wiring is defined as the product photo, and not optional available.

Z axis

CZLN80☐-S2PN-CD-P1

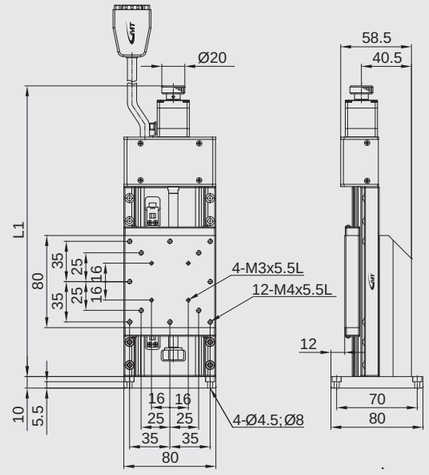

Stroke	L	L1
50	160	252.5
75	185	277.5

CZLC80☐-S2PN-CD-P1

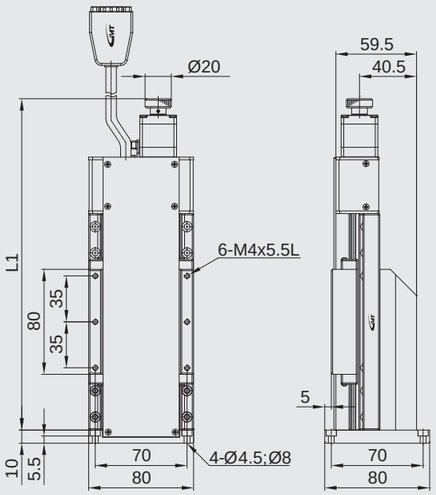

Model description

CXZN50☐ / CXZC50☐series

Material	Drive type	Accuracy level	Wiring method	Motor model	Connector type
S Stainless steel	2 Ball screw	P Precision grade	N GMT Standard	C 5-phase stepper X Not equipped	D D-SUB15 (VGA)

CXZN 50 50 - S 2 P N - C D - P1 - 2 C

Axis & serial numbers	Table size	Stroke	Ball screw pitch	Connecting cable (optional)	Driver (optional)
CXZN XZ axis (w/o cover) CXZC XZ axis (w/cover)	50 50*50mm	50 50mm 75 75mm	P1 1mm P2 2mm	Blank Not equipped 2 2m cable*1 4 4m cable*1 6 6m cable*1	Blank Not equipped C Standard specified by GMT

*1 (D-SUB 15 pin female connector + the other side with discrete wirings)

Model Number			CXZN5050-S2PN-CD-P1 / CXZC5050-S2PN-CD-P1	CXZN5050-S2PN-CD-P2 / CXZC5050-S2PN-CD-P2	CXZN5075-S2PN-CD-P1 / CXZC5075-S2PN-CD-P1	CXZN5075-S2PN-CD-P2 / CXZC5075-S2PN-CD-P2
Mechanical specifications	Table size		50X50 mm			
	Travel stroke		50 mm		75 mm	
	Drive type		Ball screw Ø8 lead 1mm	Ball screw Ø8 lead 2mm	Ball screw Ø8 lead 1mm	Ball screw Ø8 lead 2mm
	Rail		Circular Linear ball guiding			
	Stage material/Surface treatment		Stainless steel / Electroless nickel plating			
	Main unit weight		N：2.45 Kg / C：3.22 Kg		N：2.73 Kg / C：2.83 Kg	
	Coupling		FAMCS10-5*5			
	Accuracy level		P：Precision grade			
	Wiring method		N：GMT Standard*2			
Precision specifications	Resolution (pulse)	Full / Half	2 μm / 1 μm	4 μm / 2 μm	2 μm / 1 μm	4 μm / 2 μm
	Maximum speed (full step)		20 mm / sec	40 mm / sec	20 mm / sec	40 mm / sec
	Positioning precision		5 μm		7 μm	
	Repeatability precision		±0.5 μm			
	Load capacity		9 Kgf			
	Missed step		1 μm			
	Parallelism		20 μm			
	Dynamic straightness		2 μm			
	Dynamic parallelism		10 μm			
Electrical specifications	Motor	Type/Shaft numbers	5-phase stepper / ☐28 double shafts			
		Brand/ Model	Sanyo / SH5281-7211			
	Driver brand/Model		Please refer to motor / driver cross-reference table (page E3)			
	Connector	Stage side connector	15-pin male end connector D-SUB			
		Controller side connector	15-pin female end connector D-SUB (optional)			
	Sensor	Origin sensor	Photoelectric sensor EE-SX4134			
		Limit sensor				
		Origin approximation sensor	N/A			
		Power voltage	24V±10%			
		Control output	NPN open collector output under 24V 8mA			
		Output control	Testing (sensing)：output transistor OFF (closed)			

*2 GMT Standard wiring is defined as the product photo, and not optional available.

XZ axis

CXZN50☐-S2PN-CD-P1

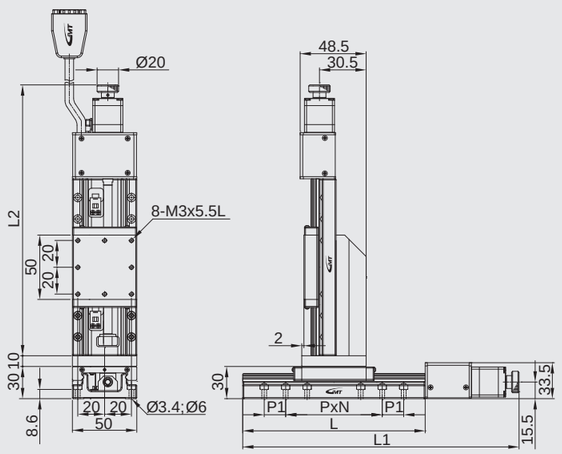

Stroke	L	L1	P	N	P1
50	120	217.5	40	3	227.5
75	145	242.5	40	3	250

CXZC50☐-S2PN-CD-P1

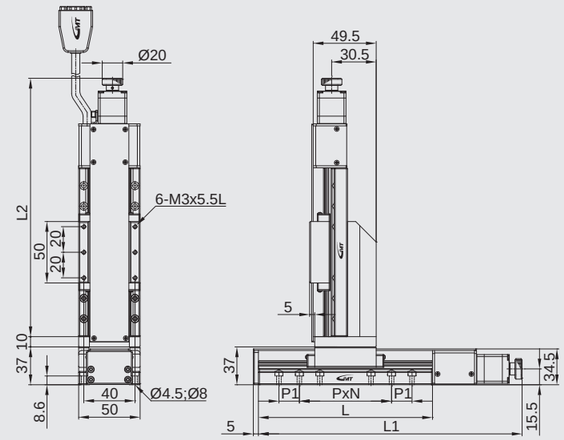

Model description

CXZN60☐ / CXZC60☐series

Material	Drive type	Accuracy level	Wiring method	Motor model	Connector type
S Stainless steel	2 Ball screw	P Precision grade	N GMT Standard	C 5-phase stepper X Not equipped	D D-SUB15 (VGA)

CXZN 60 50 - S 2 P N - C D - P1 - 2 C

Axis & serial numbers	Table size	Stroke	Ball screw pitch	Connecting cable (optional)	Driver (optional)
CXZN XZ axis (w/o cover) CXZC XZ axis (w/cover)	60 60*60mm	50 50mm 75 75mm	P1 1mm P2 2mm	Blank Not equipped 2 2m cable*1 4 4m cable*1 6 6m cable*1	Blank Not equipped C Standard specified by GMT

*1 (D-SUB 15 pin female connector + the other side with discrete wirings)

Model Number			CXZN6050-S2PN-CD-P1	CXZN6050-S2PN-CD-P2	CXZN6075-S2PN-CD-P1	CXZN6075-S2PN-CD-P2
			CXZC6050-S2PN-CD-P1	CXZC6050-S2PN-CD-P2	CXZC6075-S2PN-CD-P1	CXZC6075-S2PN-CD-P2
Mechanical specifications	Table size		60X60 mm			
	Travel stroke		50 mm		75 mm	
	Drive type		Ball screw Ø8 lead 1mm	Ball screw Ø8 lead 2mm	Ball screw Ø8 lead 1mm	Ball screw Ø8 lead 2mm
	Rail		Circular Linear ball guiding			
	Stage material/Surface treatment		Stainless steel / Electroless nickel plating			
	Main unit weight		N：3.10 Kg / C：3.38 Kg		N：3.38 Kg / C：3.48 Kg	
	Coupling		FAMCS10-5*5			
	Accuracy level		P：Precision grade			
	Wiring method		N：GMT Standard*2			
Precision specifications	Resolution (pulse)	Full / Half	2 μm / 1 μm	4 μm / 2 μm	2 μm / 1 μm	4 μm / 2 μm
	Maximum speed (full step)		20 mm / sec	40 mm / sec	20 mm / sec	40 mm / sec
	Positioning precision		5 μm		7 μm	
	Repeatability precision		±0.5 μm			
	Load capacity		7 Kgf			
	Missed step		1 μm			
	Parallelism		20 μm			
	Dynamic straightness		2 μm			
	Dynamic parallelism		10 μm			
Electrical specifications	Motor	Type/Shaft numbers	5-phase stepper / ☐28 double shafts			
		Brand/ Model	Sanyo / SH5281-7211			
	Driver brand/Model		Please refer to motor / driver cross-reference table (page E3)			
	Connector	Stage side connector	15-pin male end connector D-SUB			
		Controller side connector	15-pin female end connector D-SUB (optional)			
	Sensor	Origin sensor	Photoelectric sensor EE-SX4134			
		Limit sensor				
		Origin approximation sensor	N/A			
		Power voltage	24V±10%			
		Control output	NPN open collector output under 24V 8mA			
		Output control	Testing (sensing)：output transistor OFF (closed)			

*2 GMT Standard wiring is defined as the product photo, and not optional available.

XZ axis

CXZN60☐-S2PN-CD-P1

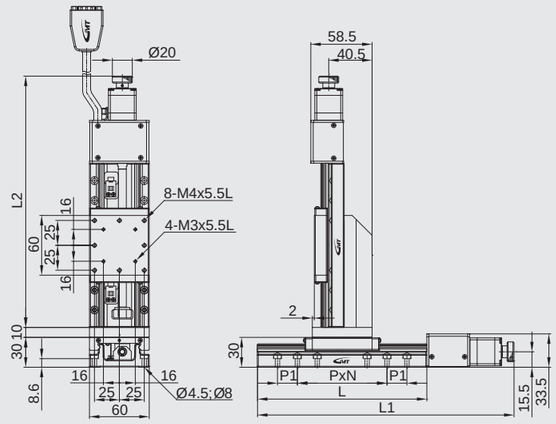

Stroke	L	L1	P	N	P1	L2
50	140	229	50	1	25	233
75	165	245	50	3	N/A	262

CXZC60☐-S2PN-CD-P1

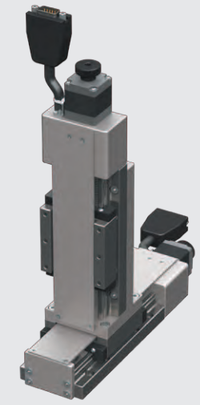

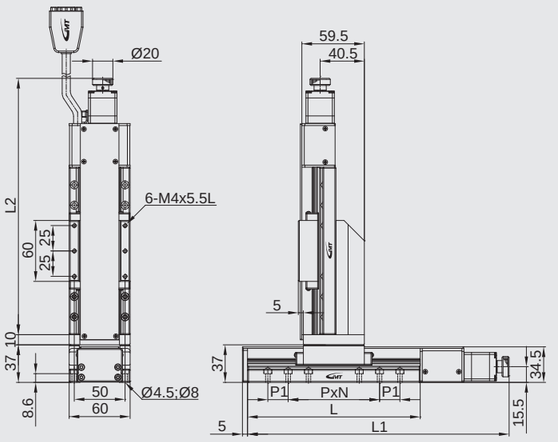

Model description

CXZN80☐ / CXZC80☐series

Material	Drive type	Accuracy level	Wiring method	Motor model	Connector type
S Stainless steel	2 Ball screw	P Precision grade	N GMT Standard	C 5-phase stepper X Not equipped	D D-SUB15 (VGA)

CXZN 80 50 - S 2 P N - C D - P1 - 2 C

Axis & serial numbers	Table size	Stroke	Ball screw pitch	Connecting cable (optional)	Driver (optional)
CXZN XZ axis (w/o cover) CXZC XZ axis (w/cover)	80 80*80mm	50 50mm 75 75mm	P1 1mm P2 2mm	Blank Not equipped 2 2m cable*1 4 4m cable*1 6 6m cable*1	Blank Not equipped C Standard specified by GMT

*1 (D-SUB 15 pin female connector + the other side with discrete wirings)

Model Number			CXZN8050-S2PN-CD-P1 / CXZC8050-S2PN-CD-P1	CXZN8050-S2PN-CD-P2 / CXZC8050-S2PN-CD-P2	CXZN8075-S2PN-CD-P1 / CXZC8075-S2PN-CD-P1	CXZN8075-S2PN-CD-P2 / CXZC8075-S2PN-CD-P2
Mechanical specifications	Table size		80X80 mm			
	Travel stroke		50 mm		75 mm	
	Drive type		Ball screw Ø8 lead 1mm	Ball screw Ø8 lead 2mm	Ball screw Ø8 lead 1mm	Ball screw Ø8 lead 2mm
	Rail		Circular Linear ball guiding			
	Stage material/Surface treatment		Stainless steel / Electroless nickel plating			
	Main unit weight		N：4.27 Kg / C：4.62 Kg		N：4.58 Kg / C：4.96 Kg	
	Coupling		FAMCS10-5*5			
	Accuracy level		P：Precision grade			
	Wiring method		N：GMT Standard*2			
Precision specifications	Resolution (pulse)	Full / Half	2 μm / 1 μm	4 μm / 2 μm	2 μm / 1 μm	4 μm / 2 μm
	Maximum speed (full step)		20 mm / sec	40 mm / sec	20 mm / sec	40 mm / sec
	Positioning precision		5 μm		7 μm	
	Repeatability precision		±0.5 μm			
	Load capacity		11 Kgf			
	Missed step		1 μm			
	Parallelism		20 μm			
	Dynamic straightness		2 μm			
	Dynamic parallelism		10 μm			
Electrical specifications	Motor	Type/Shaft numbers	5-phase stepper / ☐28 double shafts			
		Brand/ Model	Sanyo / SH5281-7211			
	Driver brand/Model		Please refer to motor / driver cross-reference table (page E3)			
	Connector	Stage side connector	15-pin male end connector D-SUB			
		Controller side connector	15-pin female end connector D-SUB (optional)			
	Sensor	Origin sensor	Photoelectric sensor EE-SX4134			
		Limit sensor				
		Origin approximation sensor	N/A			
		Power voltage	24V±10%			
		Control output	NPN open collector output under 24V 8mA			
		Output control	Testing (sensing)：output transistor OFF (closed)			

*2 GMT Standard wiring is defined as the product photo, and not optional available.

XZ axis

CXZN80☐-S2PN-CD-P1

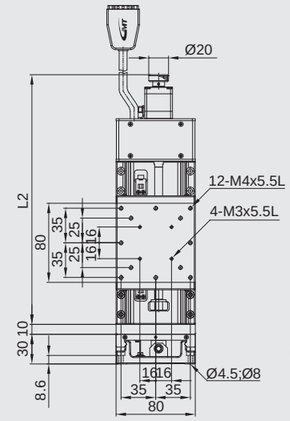

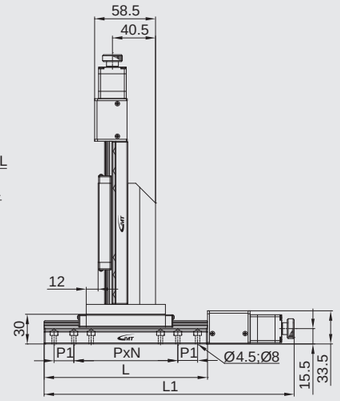

Stroke	L	L1	P	N	P1	L2
50	160	247.5	35	4	35	252.5
75	185	272.5	35	4	35	277.5

CXZC80☐-S2PN-CD-P1

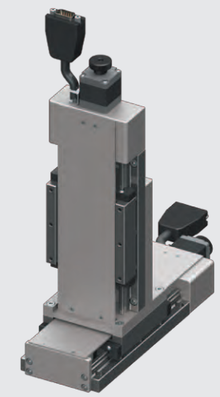

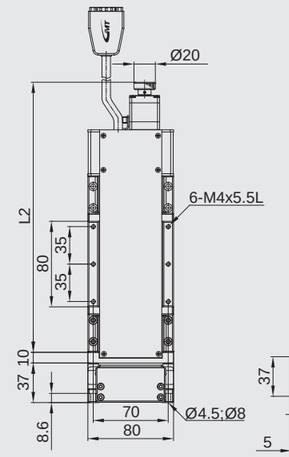

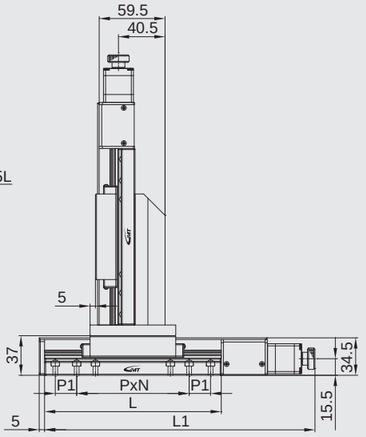

Model description

CXYZN50☐ / CXYZ50☐series

Material	Drive type	Accuracy level	Wiring method	Motor model	Connector type
S Stainless steel	2 Ball screw	P Precision grade	N GMT Standard	C 5-phase stepper X Not equipped	D D-SUB15 (VGA)

CXYZN 50 50 - S 2 P N - C D - P1 - 2 C

Axis & serial numbers	Table size	Stroke	Ball screw pitch	Connecting cable (optional)	Driver (optional)
CXYZN XYZ axis (w/o cover) CXYZC XYZ axis (w/cover)	50 50*50mm	50 50mm 75 75mm	P1 1mm P2 2mm	Blank Not equipped 2 2m cable*1 4 4m cable*1 6 6m cable*1	Blank Not equipped C Standard specified by GMT

*1 (D-SUB 15 pin female connector + the other side with discrete wirings)

Model Number			CXYZN5050-S2PN-CD-P1	CXYZN5050-S2PN-CD-P2	CXYZN5075-S2PN-CD-P1	CXYZN5075-S2PN-CD-P2
			CXYZC5050-S2PN-CD-P1	CXYZC5050-S2PN-CD-P2	CXYZC5075-S2PN-CD-P1	CXYZC5075-S2PN-CD-P2
Mechanical specifications	Table size		50X50 mm			
	Travel stroke		50 mm		75 mm	
	Drive type		Ball screw Ø8 lead 1mm	Ball screw Ø8 lead 2mm	Ball screw Ø8 lead 1mm	Ball screw Ø8 lead 2mm
	Rail		Circular Linear ball guiding			
	Stage material/Surface treatment		Stainless steel / Electroless nickel plating			
	Main unit weight		N：3.55 Kg / C：4.39 Kg		N：3.97 Kg / C：4.12 Kg	
	Coupling		FAMCS10-5*5			
	Accuracy level		P：Precision grade			
	Wiring method		N：GMT Standard*2			
Precision specifications	Resolution (pulse)	Full / Half	2 μm / 1 μm	4 μm / 2 μm	2 μm / 1 μm	4 μm / 2 μm
	Maximum speed (full step)		20 mm / sec	40 mm / sec	20 mm / sec	40 mm / sec
	Positioning precision		5 μm		7 μm	
	Repeatability precision		±0.5 μm			
	Load capacity		7 Kgf			
	Missed step		1 μm			
	Parallelism		15 μm			
	Dynamic straightness		2 μm			
	Dynamic parallelism		10 μm			
Electrical specifications	Motor	Type/Shaft numbers	5-phase stepper / ☐28 double shafts			
		Brand/ Model	Sanyo / SH5281-7211			
	Driver brand/Model		Please refer to motor / driver cross-reference table (page E3)			
	Connector	Stage side connector	15-pin male end connector D-SUB			
		Controller side connector	15-pin female end connector D-SUB (optional)			
	Sensor	Origin sensor	Photoelectric sensor EE-SX4134			
		Limit sensor				
		Origin approximation sensor	N/A			
		Power voltage	24V±10%			
		Control output	NPN open collector output under 24V 8mA			
		Output control	Testing (sensing)：output transistor OFF (closed)			

*2 GMT Standard wiring is defined as the product photo, and not optional available.

XYZ axis

CXYZN50☐-S2PN-CD-P1

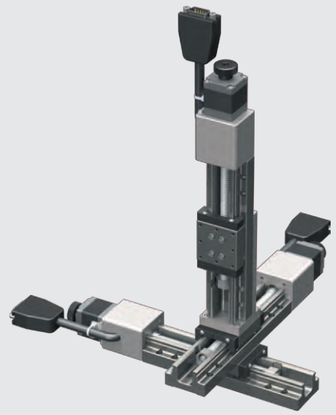

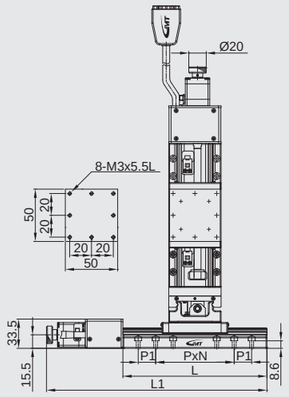

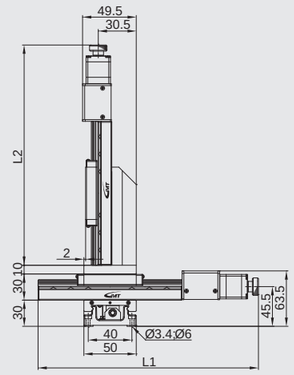

Stroke	L	L1	P	N	P1	L2
50	130	217.5	40	3	N/A	277.5
75	155	242.5	40	3	N/A	250

CXYZC50☐-S2PN-CD-P1

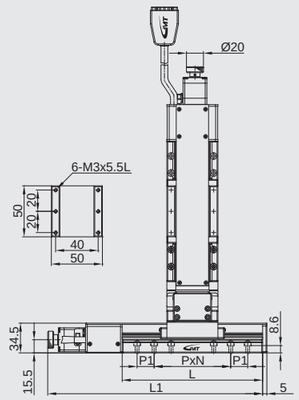

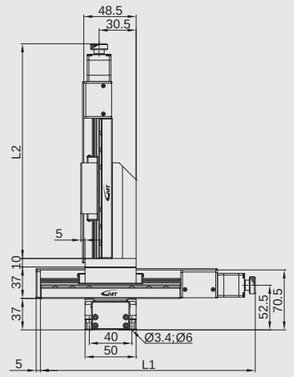

Model description

CXYZN60□ / CXYZC60□series

Material	Drive type	Accuracy level	Wiring method	Motor model	Connector type
S Stainless steel	2 Ball screw	P Precision grade	N GMT Standard	C 5-phase stepper X Not equipped	D D-SUB15 (VGA)

CXYZN 60 50 - S 2 P N - C D - P1 - 2 C

Axis & serial numbers	Table size	Stroke	Ball screw pitch	Connecting cable (optional)	Driver (optional)
CXYZN XYZ axis (w/o cover)	60 60*60mm	50 50mm	P1 1mm	Blank Not equipped	Blank Not equipped
CXYZC XYZ axis (w/cover)		75 75mm	P2 2mm	2 2m cable*1	C Standard specified by GMT
				4 4m cable*1	
				6 6m cable*1	

*1 (D-SUB 15 pin female connector + the other side with discrete wirings)

Model Number			CXYZN6050-S2PN-CD-P1 / CXYZC6050-S2PN-CD-P1	CXYZN6050-S2PN-CD-P2 / CXYZC6050-S2PN-CD-P2	CXYZN6075-S2PN-CD-P1 / CXYZC6075-S2PN-CD-P1	CXYZN6075-S2PN-CD-P2 / CXYZC6075-S2PN-CD-P2
Mechanical specifications	Table size		60X60 mm			
	Travel stroke		50 mm		75 mm	
	Drive type		Ball screw Ø8 lead 1mm	Ball screw Ø8 lead 2mm	Ball screw Ø8 lead 1mm	Ball screw Ø8 lead 2mm
	Rail		Circular Linear ball guiding			
	Stage material/Surface treatment		Stainless steel / Electroless nickel plating			
	Main unit weight		N：4.29 Kg / C：4.71 Kg		N：4.71 Kg / C：4.86 Kg	
	Coupling		FAMCS10-5*5			
	Accuracy level		P：Precision grade			
	Wiring method		N：GMT Standard*2			
Precision specifications	Resolution (pulse)	Full / Half	2 μm / 1 μm	4 μm / 2 μm	2 μm / 1 μm	4 μm / 2 μm
	Maximum speed (full step)		20 mm / sec	40 mm / sec	20 mm / sec	40 mm / sec
	Positioning precision		5 μm		7 μm	
	Repeatability precision		±0.5 μm			
	Load capacity		9 Kgf			
	Missed step		1 μm			
	Parallelism		20 μm			
	Dynamic straightness		2 μm			
	Dynamic parallelism		10 μm			
Electrical specifications	Motor	Type/Shaft numbers	5-phase stepper / □28 double shafts			
		Brand/ Model	Sanyo / SH5281-7211			
	Driver brand/Model		Please refer to motor / driver cross-reference table (page E3)			
	Connector	Stage side connector	15-pin male end connector D-SUB			
		Controller side connector	15-pin female end connector D-SUB (optional)			
	Sensor	Origin sensor	Photoelectric sensor EE-SX4134			
		Limit sensor				
		Origin approximation sensor	N/A			
		Power voltage	24V±10%			
		Control output	NPN open collector output under 24V 8mA			
		Output control	Testing (sensing)：output transistor OFF (closed)			

*2 GMT Standard wiring is defined as the product photo, and not optional available.

Precision Motorized XYZ axis Linear-motion Stage ▶ **Circular Linear ball guiding**
GMT GLOBAL INC.
CXYZN60□/CXYZC60□ series

XYZ axis

CXYZN60□-S2PN-CD-P1

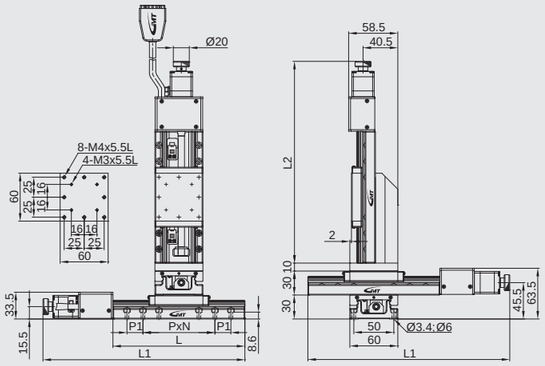

Stroke	L	L1	P	N	P1	L2
50	140	229	50	1	25	233
75	165	254	50	3	N/A	262

CXYZC60□-S2PN-CD-P1

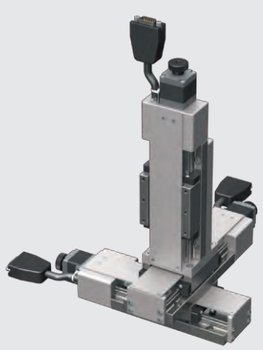

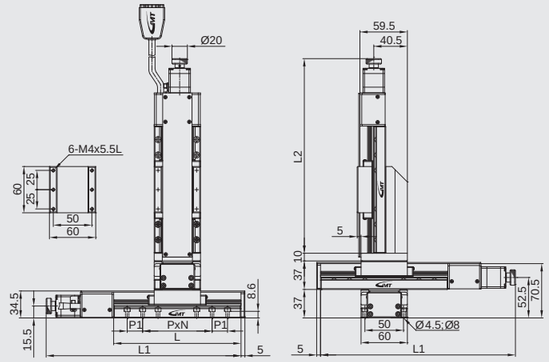

Model description

CXYZN80☐ / CXYZC80☐series

Material	Drive type	Accuracy level	Wiring method	Motor model	Connector type
S Stainless steel	2 Ball screw	P Precision grade	N GMT Standard	C 5-phase stepper X Not equipped	D D-SUB15 (VGA)

CXYZN 80 50 - S 2 P N - C D - P1 - 2 C

Axis & serial numbers	Table size	Stroke	Ball screw pitch	Connecting cable (optional)	Driver (optional)
CXYZN XYZ axis (w/o cover)	80 80*80mm	50 50mm	P1 1mm	Blank Not equipped	Blank Not equipped
CXYZC XYZ axis (w/cover)		75 75mm	P2 2mm	2 2m cable*1	C Standard specified by GMT
				4 4m cable*1	
				6 6m cable*1	

*1 (D-SUB 15 pin female connector + the other side with discrete wirings)

Model Number			CXYZN8050-S2PN-CD-P1 / CXYZC8050-S2PN-CD-P1	CXYZN8050-S2PN-CD-P2 / CXYZC8050-S2PN-CD-P2	CXYZN8075-S2PN-CD-P1 / CXYZC8075-S2PN-CD-P1	CXYZN8075-S2PN-CD-P2 / CXYZC8075-S2PN-CD-P2
Mechanical specifications	Table size		80X80 mm			
	Travel stroke		50 mm		75 mm	
	Drive type		Ball screw Ø8 lead 1mm	Ball screw Ø8 lead 2mm	Ball screw Ø8 lead 1mm	Ball screw Ø8 lead 2mm
	Rail		Circular Linear ball guiding			
	Stage material/Surface treatment		Stainless steel / Electroless nickel plating			
	Main unit weight		N：5.94 Kg / C：6.48 Kg		N：6.42 Kg / C：6.99 Kg	
	Coupling		FAMCS10-5*5			
	Accuracy level		P：Precision grade			
	Wiring method		N：GMT Standard*2			
Precision specifications	Resolution (pulse)	Full / Half	2 μm / 1 μm	4 μm / 2 μm	2 μm / 1 μm	4 μm / 2 μm
	Maximum speed (full step)		20 mm / sec	40 mm / sec	20 mm / sec	40 mm / sec
	Positioning precision		5 μm		7 μm	
	Repeatability precision		±0.5 μm			
	Load capacity		11 Kgf			
	Missed step		1 μm			
	Parallelism		20 μm			
	Dynamic straightness		2 μm			
	Dynamic parallelism		10 μm			
Electrical specifications	Motor	Type/Shaft numbers	5-phase stepper / ☐28 double shafts			
		Brand/ Model	Sanyo / SH5281-7211			
	Driver brand/Model		Please refer to motor / driver cross-reference table (page E3)			
	Connector	Stage side connector	15-pin male end connector D-SUB			
		Controller side connector	15-pin female end connector D-SUB (optional)			
	Sensor	Origin sensor	Photoelectric sensor EE-SX4134			
		Limit sensor				
		Origin approximation sensor	N/A			
		Power voltage	24V±10%			
		Control output	NPN open collector output under 24V 8mA			
		Output control	Testing (sensing)：output transistor OFF (closed)			

*2 GMT Standard wiring is defined as the product photo, and not optional available.

XYZ axis

CXYZN80☐-S2PN-CD-P1

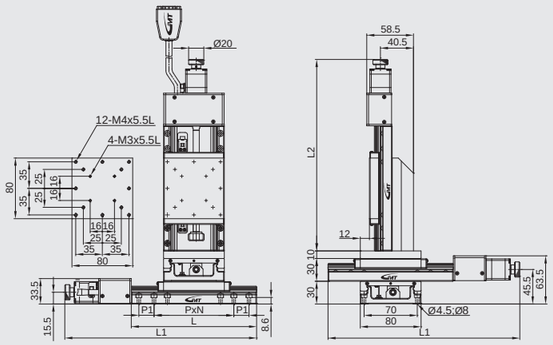

Stroke	L	L1	P	N	P1	L2
50	165	247.5	35	4	35	252.5
75	185	272.5	35	4	35	277.5

CXYZC80☐-S2PN-CD-P1

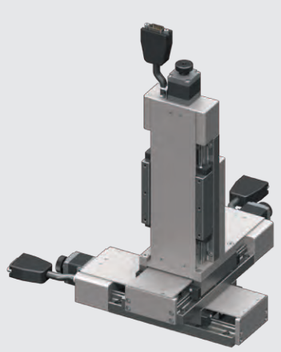

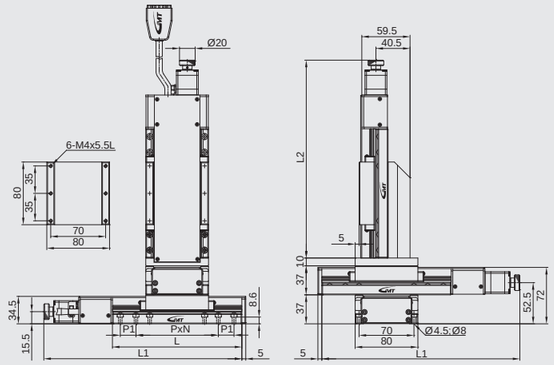

AZV90□ series

Model description

Material	Drive type	Accuracy level	Wiring method	Motor model	Connector type
A Aluminum alloy	8 Ball screw & belt	P Precision grade	N GMT Standard	C 5-phase stepper X Not equipped	D D-SUB15 (VGA)

AZV 90 10 - A 8 P N - C D - 2 C

Axis & serial numbers	Table size	stroke
AZV Z axis	90 90*90mm	10 10mm 20 20mm

Connecting cable (optional)	Driver (optional)
Blank Not equipped 2 2m cable*1 4 4m cable*1 6 6m cable*1	Blank Not equipped C Standard specified by GMT

*1 (D-SUB 15 pin female connector + the other side with discrete wirings)

Model Number			AZV9010-A8PN-CD	AZV9020-A8PN-CD
Mechanical specifications		Table size	90X90 mm	
		Travel stroke	10 mm	20 mm
		Drive type	Ball screw Ø8 lead 1mm & belt	
		Rail	Crossed roller guiding	
		Stage material/Surface treatment	Aluminum alloy / Black anodized	
		Main unit weight	1.85 Kg	1.95 Kg
		Coupling	Not equipped	
		Accuracy level	P : Precision grade	
		Wiring method	N : GMT Standard*2	
Precision specifications	Resolution (pulse)	Full / Half	1 μm / 0.5 μm	1 μm / 0.5 μm
		Maximum speed (full step)	5 mm / sec	
		Positioning precision	10 μm	
		Repeatability precision	±0.5 μm	
		Load capacity	5 Kgf	
		Missed step	1 μm	
		Parallelism	60 μm	
		Dynamic straightness	5 μm	
		Dynamic parallelism	30 μm	
Electrical specifications	Motor	Type/Shaft numbers	5-phase stepper / □42 double shafts	
		Brand/ Model	Sanyo / 103F5505-8211	
	Driver brand/Model		Please refer to motor / driver cross-reference table (page E3)	
	Connector	Stage side connector	15-pin male end connector D-SUB	
		Controller side connector	15-pin female end connector D-SUB (optional)	
	Sensor	Origin sensor	Photoelectric sensor EE-SX4134	
		Limit sensor		
		Origin approximation sensor	N / A	
		Power voltage	24V±10%	
		Control output	NPN open collector output under 24V 8mA	
		Output control	Testing (sensing) : output transistor OFF (closed)	

*2 GMT Standard wiring is defined as the product photo, and not optional available.

Z axis

AZV9010-A8-PN-CD

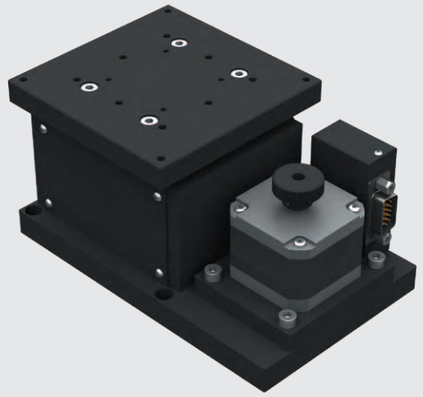

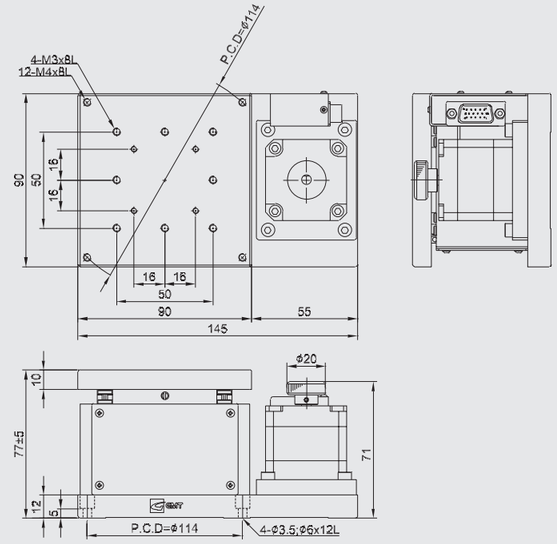

AZV9020-A8-PN-CD

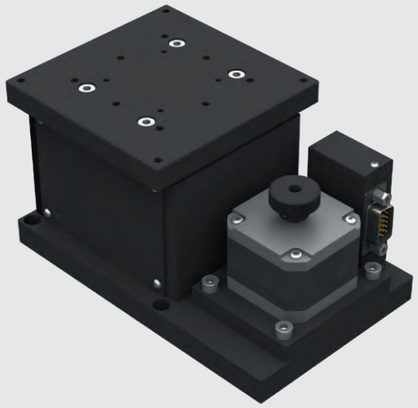

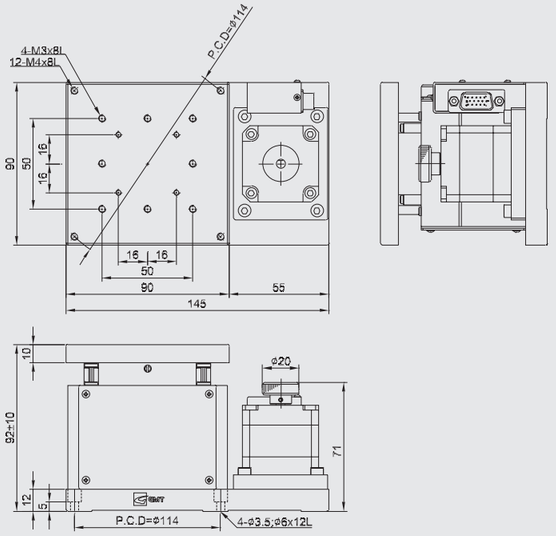

AR series

Model description

Material	Drive type	Mounting type	Accuracy level	Wiring method	Motor model	Connector type
A Aluminum alloy	3 Warm & warm gear	NIL Horizontal V Vertical	P Precision grade	N GMT Standard	C 5-phase stepper X Not equipped	D D-SUB15 (VGA)

AR 59 - A 3 V P N - C D - 2 C

Axis & serial numbers	Table size	Connecting cable (optional)	Driver (optional)
AR θ axis	39 Ø39mm 59 Ø59mm 79 Ø79mm	Blank Not equipped 2 2m cable*1 4 4m cable*1 6 6m cable*1	Blank Not equipped C Standard specified by GMT

*1 (D-SUB 15 pin female connector + the other side with discrete wirings)

Model Number			AR39-A3PN-CD	AR59-A3PN-CD	AR59-A3VPN-CD	AR79-A3PN-CD
Mechanical specifications	Table size		Ø39	Ø59		Ø79
	Travel stroke		360°			360° / Adjustable limited rotation angle under 340°
	Drive type		Warm & warm gear (Ratio 1 / 120)	Warm & warm gear (Ratio 1 / 180)		Warm & warm gear (Ratio 1 / 144)
	Rail		Assembled ball bearing			Crossed-roller bearing
	Stage material/Surface treatment		Aluminum alloy / Black anodized			
	Main unit weight		0.42 Kg	0.62 Kg	0.68 Kg	1.05 Kg
	Coupling		FSMMS12-4*5	FSMMS12-5*6		
	Accuracy level		P : Precision grade			
	Wiring method		N : GMT Standard*2			
Precision specifications	Resolution (pulse)	Full / Half	0.006° / 0.003°	0.004° / 0.002°		0.005° / 0.0025°
	Maximum speed (full step)		30 deg / sec	20 deg / sec		25 deg / sec
	Positioning precision		0.05°			0.03°
	Repeatability precision		±0.01°			±0.005°
	Load capacity		3 Kgf		1 Kgf	10 Kgf
	Missed step		0.05°			
	Parallelism		30 μm			40 μm
	Dynamic straightness		30 μm			20 μm
	Dynamic parallelism		20 μm			
Electrical specifications	Motor	Type/Shaft numbers	5-phase stepper / □28 double shafts			5-phase stepping / □42 double shafts
		Brand/ Model	Sanyo / SH5281-7211			Sanyo / 103F5505-8211
	Driver brand/Model		Please refer to motor / driver cross-reference table (page E3)			
	Connector	Stage side connector	15-pin male end connector D-SUB			
		Controller side connector	15-pin female end connector D-SUB (optional)			
	Sensor	Origin sensor	Photoelectric sensor EE-SX4134			Photoelectric sensor EE-SX4134 Installed limit sensor function switch ON/OFF
		Limit sensor	N/A			
		Origin approximation sensor				
		Power voltage	24V±10%			
		Control output	NPN open collector output under 24V 8mA			
		Output control	Testing (sensing) : output transistor OFF (closed)			

*2 GMT Standard wiring is defined as the product photo, and not optional available.

θ axis

AR39-A

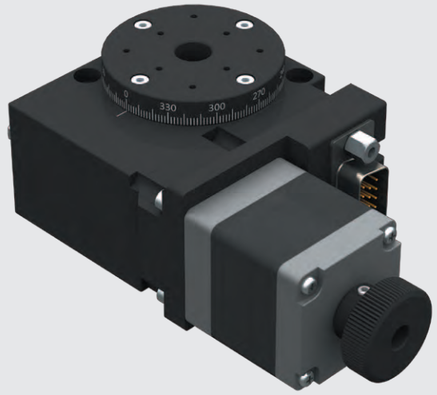

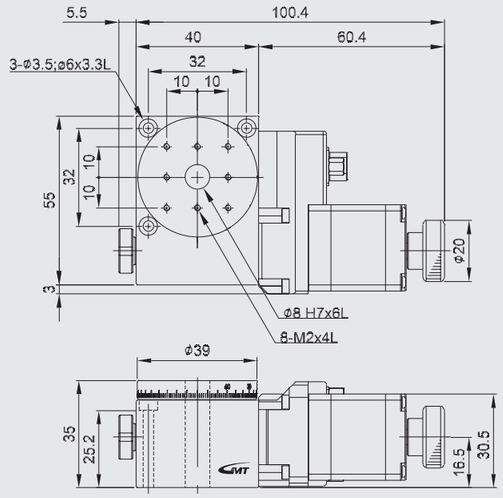

AR59-A

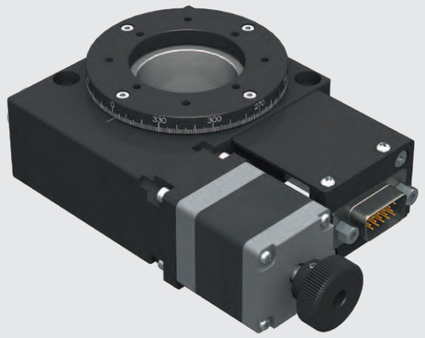

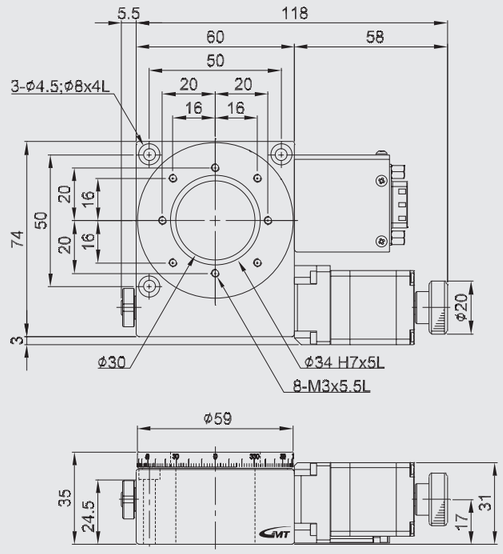

AR59-A3V

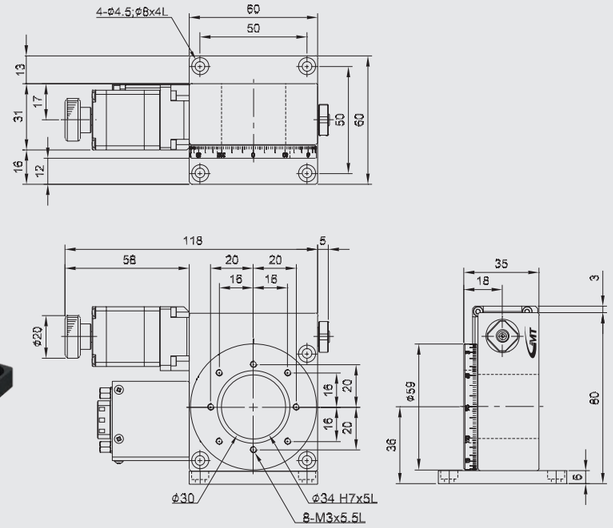

AR79-A

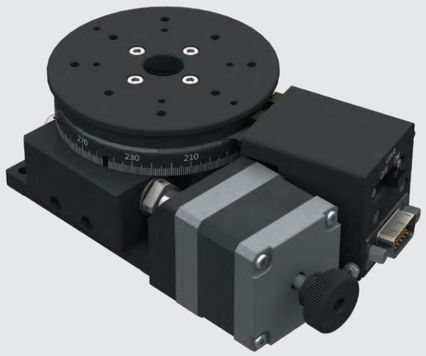

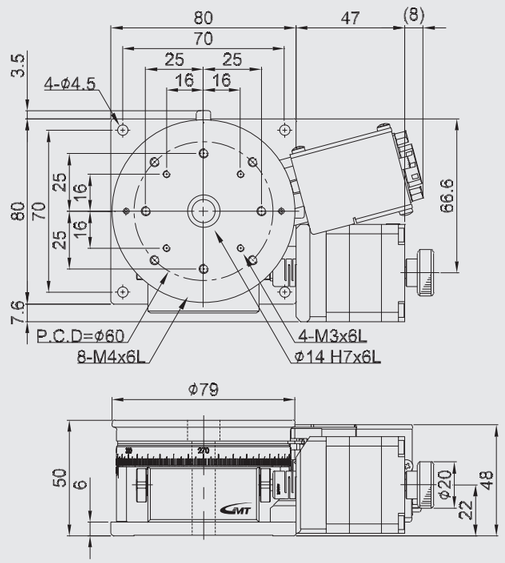

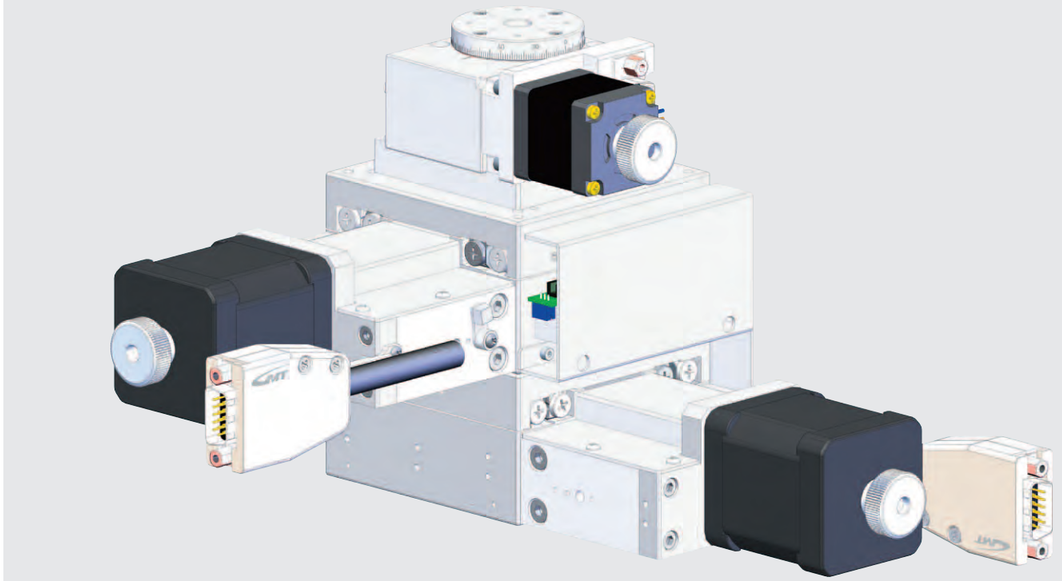

AR series

Model description

Material	Drive type	Mounting type	Accuracy level	Wiring method	Motor model	Connector type
A Aluminum alloy	3 Warm & warm gear	NIL Horizontal	P Precision grade	N GMT Standard	C 5-phase stepper X Not equipped	D D-SUB15 (VGA)

AR 100 - A 3 P N - C D - 2 C

Axis & serial numbers	
AR	θ axis

Table size	
100	Ø100mm
120	Ø120mm
159	Ø159mm
179	Ø179mm

Connecting cable (optional)	
Blank	Not equipped
2	2m cable*1
4	4m cable*1
6	6m cable*1

*1 (D-SUB 15 pin female connector + the other side with discrete wirings)

Driver (optional)	
Blank	Not equipped
C	Standard specified by GMT

Model Number			AR100-A3PN-CD	AR120-A3PN-CD	AR159-A3PN-CD	AR179-A3PN-CD
Mechanical specifications	Table size		Ø100	Ø120	Ø159	Ø179
	Travel stroke		Adjustable limited rotation angle under 345°		Adjustable limited rotation angle under 340°	
	Drive type		Warm & warm gear (Ratio 1 / 180)			
	Rail		Assembled ball bearing		Angular bearing	
	Stage material/Surface treatment		Aluminum alloy / Black anodized			
	Main unit weight		2.51 Kg	2.56 Kg	6.17 Kg	6.63 Kg
	Coupling		FSMMS12-5*5		FAMMS16-5*6	
	Accuracy level		P : Precision grade			
	Wiring method		N : GMT Standard*2			
Precision specifications	Resolution (pulse)	Full / Half	0.004° / 0.002°			
	Maximum speed (full step)		20 deg / sec			
	Positioning precision		0.03°			
	Repeatability precision		±0.005°			
	Load capacity		15 Kgf		Horizontal 60 Kgf / Vertical 10Kgf	
	Missed step		0.05°			
	Parallelism		40 μm		50 μm	
	Dynamic straightness		20 μm			
	Dynamic parallelism		30 μm		40 μm	
Electrical specifications	Motor	Type/Shaft numbers	5-phase stepper / □42 double shafts			
		Brand/ Model	Sanyo / 103F5505-8211			
	Driver brand/Model		Please refer to motor / driver cross-reference table (page E3)			
	Connector	Stage side connector	15-pin male end connector D-SUB			
		Controller side connector	15-pin female end connector D-SUB (optional)			
	Sensor	Origin sensor	Photoelectric sensor EE-SX912-R (Installed limit sensor function switch ON/OFF)		Photoelectric sensor EE-SX4134	
		Limit sensor				
		Origin approximation sensor	N/A		Photoelectric sensor EE-SX912-R	
		Power voltage	24V±10%			
		Control output	NPN open collector output under 24V 8mA			
		Output control	Testing (sensing) : output transistor OFF (closed)			

*2 GMT Standard wiring is defined as the product photo, and not optional available.

θ axis

AR100-A

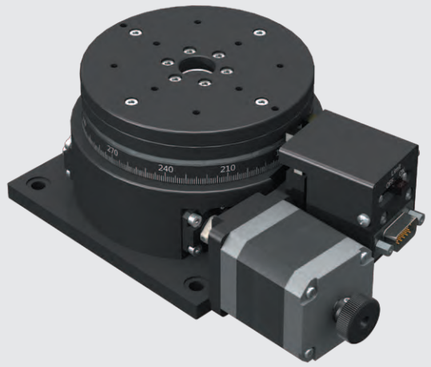

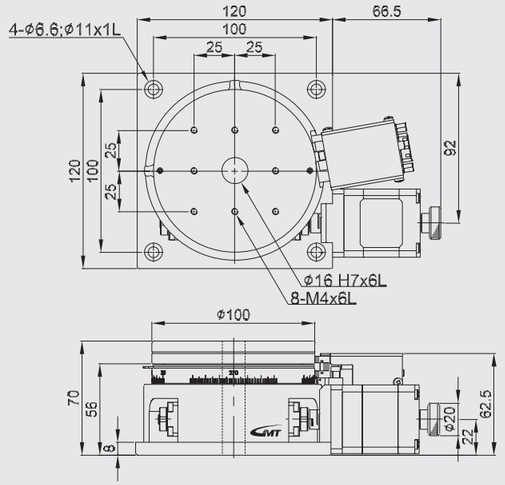

AR120-A

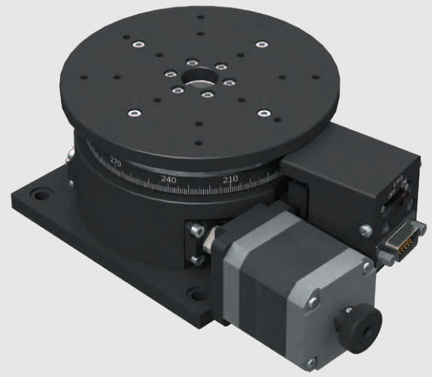

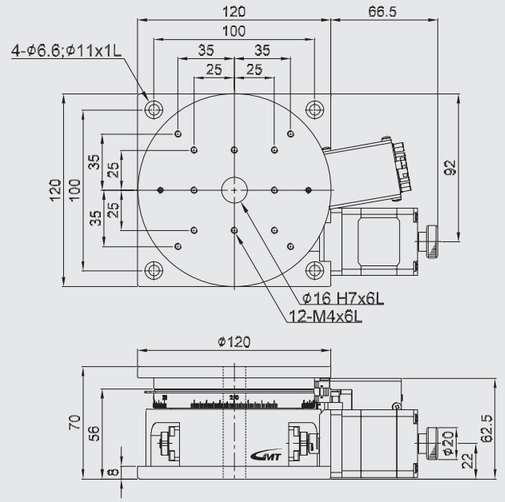

AR159-A

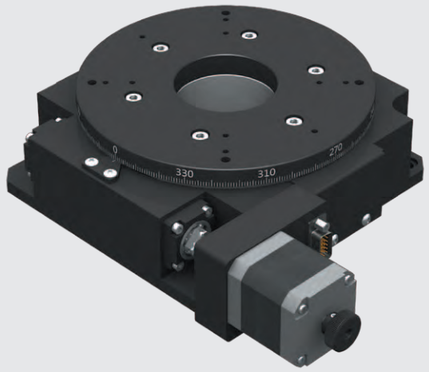

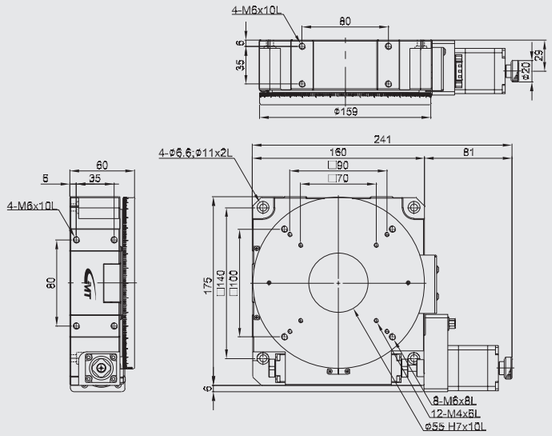

AR179-A

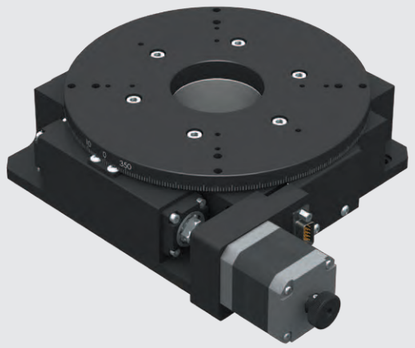

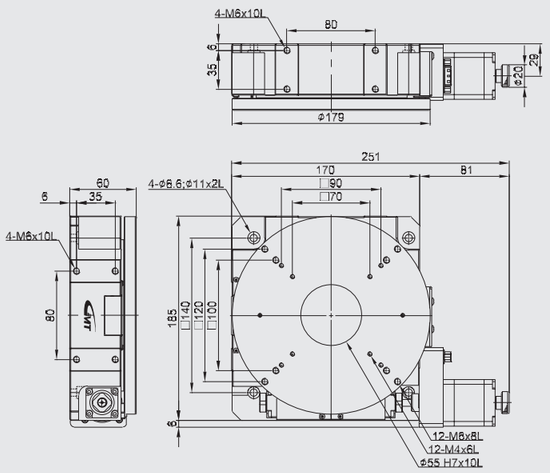

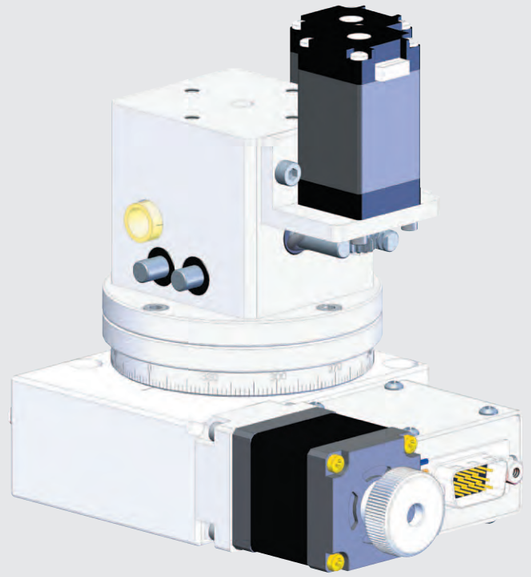

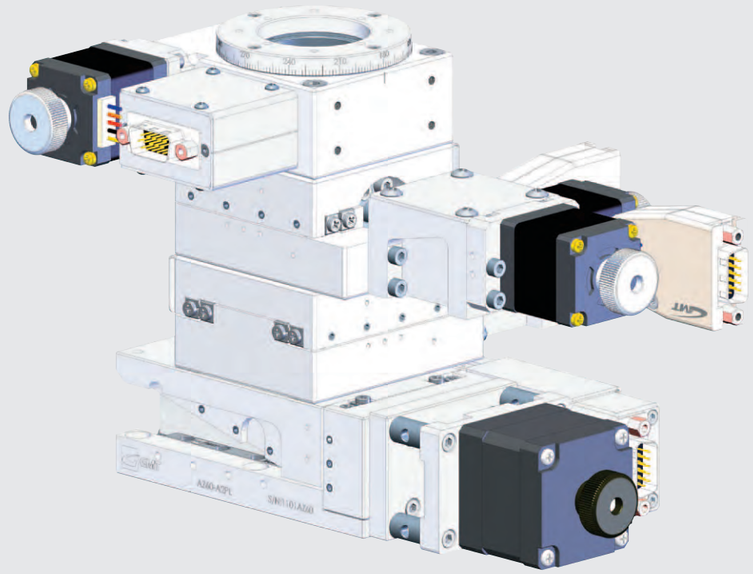

AXG / AYG series

Model description

Type		Drive type		Accuracy level		Wiring method		Motor model		Connector type	
VM	Aluminum alloy / V grooved rail	3	Warm & warm gear	P	Precision grade	R	Right wiring	C	5-phase stepper	D	D-SUB15 (VGA)
						L	Left wiring	X	Not equipped		

AXG 4-40 VM - 3 P R - C D - 2 C

Axis & serial numbers	
AXG	α axis
AXG	α axis
AYG	α β axis

Table size/Rotation center	
4-40	□40 / 40mm
4-60	□40 / 60mm
4-40	□40 / 40mm

Connecting cable (optional)	
Blank	Not equipped
2	2m cable*1
4	4m cable*1
6	6m cable*1

Driver (optional)	
Blank	Not equipped
C	Standard specified by GMT

*1 (D-SUB 15 pin female connector + the other side with discrete wirings)

Model Number			AXG4-40VM-3PR-CD	AXG4-60VM-3PR-CD	AYG4-40VM-3PR-CD
Mechanical specifications	Table size		40X40 mm		
	Travel stroke		±8°	±6°	Upper axis ±8° /Lower axis ±6°
	Drive type		Warm & warm gear (Ratio 1 / 240)	Warm & warm gear (Ratio 1 / 335)	Upper：Warm & warm gear (Ratio 1 / 240) Lower：Warm & warm gear (Ratio 1 / 240)
	Rail		Crossed-roller guiding		
	Stage material/Surface treatment		Aluminum alloy / Black anodized		
	Main unit weight		0.41 Kg		0.82 Kg
	Coupling		FSMMS12-3*5		
	Accuracy level		P：Precision grade		
	Wiring method		R：Right wiring		
Precision specifications	Resolution (pulse)	Full / Half	0.003° / Half	0.0021° / Half	Upper axis：0.003° / Half Lower axis：0.0021° / Half
	Maximum speed (full step)		15 deg / sec	10.75 deg / sec	Upper axis：15 deg / sec Lower axis：10.75 deg / sec
	Repeatability precision		±0.003°		Follow each single axis precision
	Load capacity		3 Kgf		2.5 Kgf
	Missed step		0.01°		
	Dynamic straightness		40±0.15 mm	60±0.15 mm	40±0.3 mm
	Dynamic parallelism		0.01 mm		0.02 mm
Electrical specifications	Motor	Type/Shaft numbers	5-phase stepper / □28 double shafts		
		Brand/ Model	Sanyo / SH5281-7211		
	Driver brand/Model		Please refer to motor / driver cross-reference table (page E3)		
	Connector	Stage side connector	15-pin male end connector D-SUB		
		Controller side connector	15-pin female end connector D-SUB (optional)		
	Sensor	Origin sensor	Photoelectric sensor EE-SX4134		
		Limit sensor			
		Origin approximation sensor	N / A		
		Power voltage	24V±10%		
		Control output	NPN open collector output under 24V 8mA		
		Output control	Testing (sensing)：output transistor OFF (closed)		

α axis

AXG4-40VM-3PR-CD

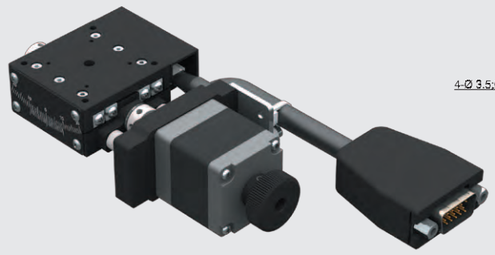

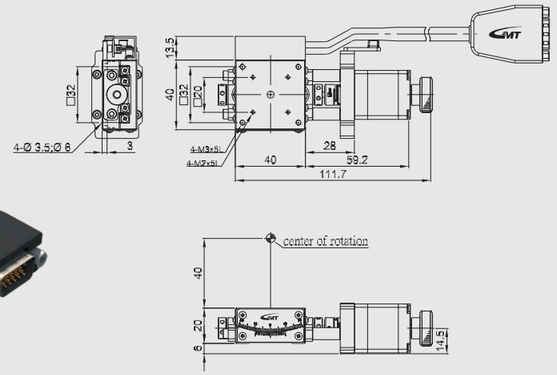

AXG4-60VM-3PR-CD

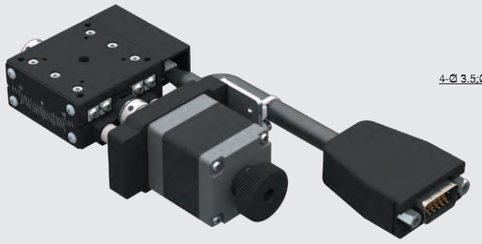

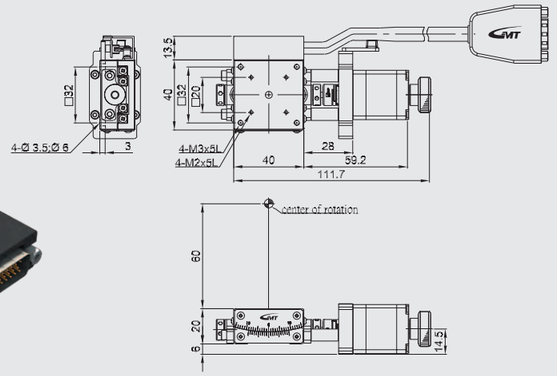

α β axis

AYG4-40VM-3PR-CD

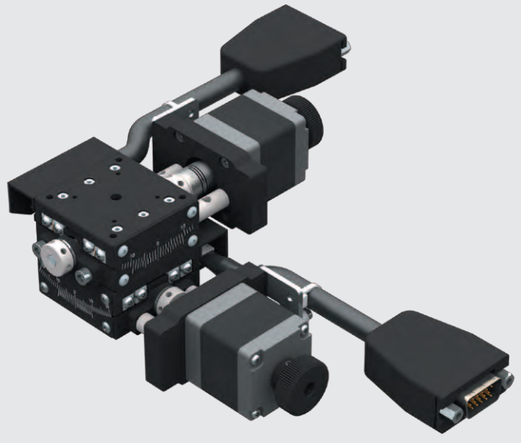

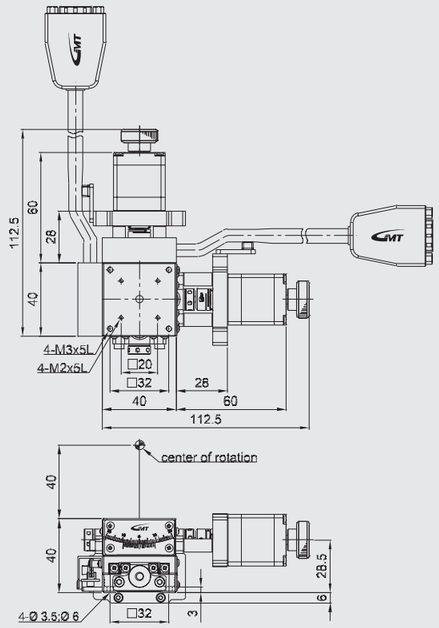

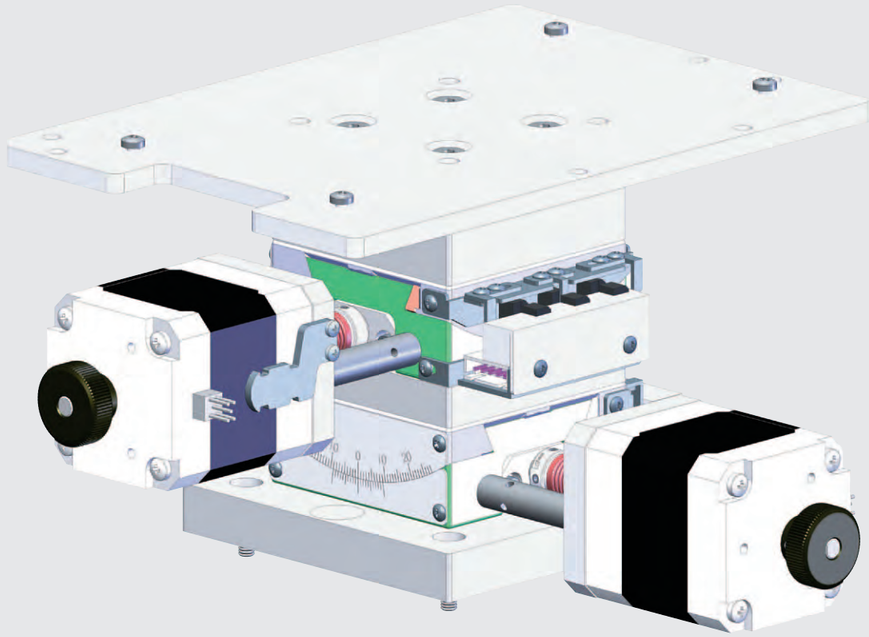

AXG / AYG series

Model description

Type		Drive type		Accuracy level		Wiring method		Motor model		Connector type	
VM	Aluminum alloy / V grooved rail	3	Warm & warm gear	P	Precision grade	R	Right wiring	C	5-phase stepper	D	D-SUB15 (VGA)
						L	Left wiring	X	Not equipped		

AXG 6-75 VM - 3 P R - C D - 2 C

Axis & serial numbers	
AXG	α axis
AXG	α axis
AYG	α β axis

Table size/Rotation center	
6-75	□60 / 75mm
6-100	□60 / 100mm
6-75	□60 / 75mm

Connecting cable (optional)	
Blank	Not equipped
2	2m cable*1
4	4m cable*1
6	6m cable*1

*1 (D-SUB 15 pin female connector + the other side with discrete wirings)

Driver (optional)	
Blank	Not equipped
C	Standard specified by GMT

Model Number			AXG6-75VM-3PR-CD	AXG6-100VM-3PR-CD	AYG6-75VM-3PR-CD
Mechanical specifications	Table size		60X60 mm		
	Travel stroke		±8°	±6°	Upper axis ±8° /Lower axis ±6°
	Drive type		Warm & warm gear (Ratio 1 / 224)	Warm & warm gear (Ratio 1 / 292)	Upper：Warm & warm gear (Ratio 1 / 224) Lower：Warm & warm gear (Ratio 1 / 292)
	Rail		Crossed-roller guiding		
	Stage material/Surface treatment		Aluminum alloy / Black anodized		
	Main unit weight		0.48 Kg		0.96 Kg
	Coupling		FSMMS12-5*5		
	Accuracy level		P：Precision grade		
	Wiring method		R：Right wiring		
Precision specifications	Resolution (pulse)	Full / Half	0.0032° / Half	0.0025° / Half	Upper axis：0.0032° Lower axis：0.0025°
	Maximum speed (full step)		15 deg / sec	10.75 deg / sec	Upper axis：16 deg / sec Lower axis：12.5 deg / sec
	Repeatability precision		±0.003°		Follow each single axis precision
	Load capacity		5.1 Kgf		4.6 Kgf
	Missed step		0.01°		
	Dynamic straightness		75±0.15 mm	100±0.15 mm	75±0.03 mm
	Dynamic parallelism		0.01 mm		0.02 mm
Electrical specifications	Motor	Type/Shaft numbers	5-phase stepper / □28 double shafts		
		Brand/ Model	Sanyo / SH5281-7211		
	Driver brand/Model		Please refer to motor / driver cross-reference table (page E3)		
	Connector	Stage side connector	15-pin male end connector D-SUB		
		Controller side connector	15-pin female end connector D-SUB (optional)		
	Sensor	Origin sensor	Photoelectric sensor EE-SX4134		
		Limit sensor			
		Origin approximation sensor	N / A		
		Power voltage	24V±10%		
		Control output	NPN open collector output under 24V 8mA		
		Output control	Testing (sensing)：output transistor OFF (closed)		

α axis

AXG6-75VM-3PR-CD

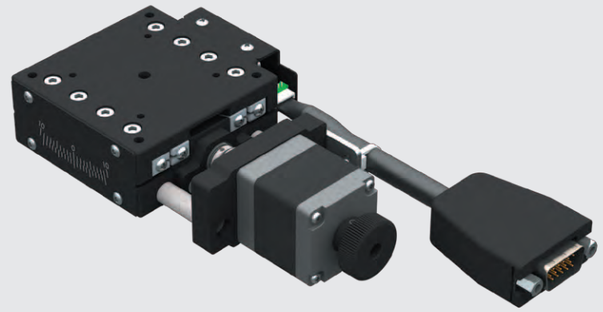

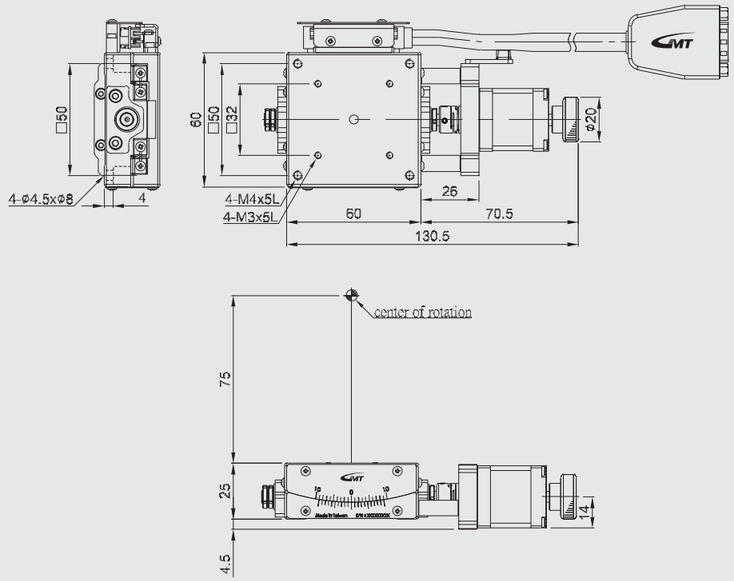

α axis

AXG6-100VM-3PR-CD

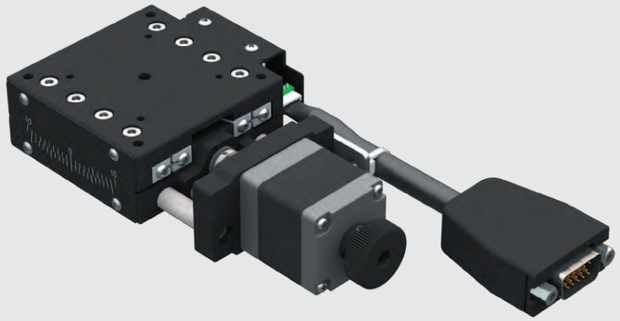

α β axis

AYG6-75VM-3PR-CD

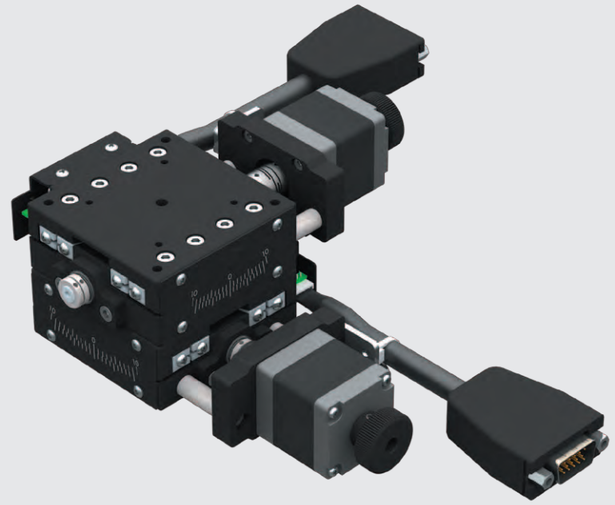

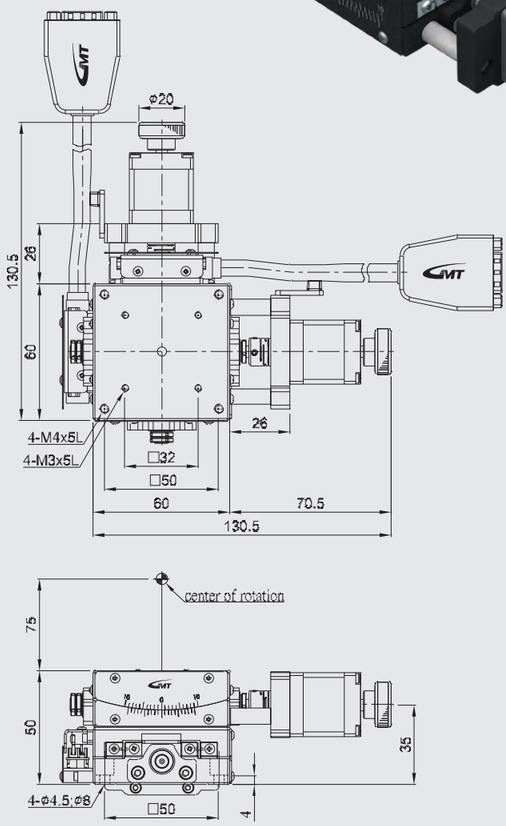

AX / HP series

Model description

Material	Drive type	Accuracy level	Wiring method	Motor model	Connector type
A Aluminum alloy	2 Ball screw	HP High resolution grade	N GMT Standard	H High resolution 5-phase stepper X Not equipped	D D-SUB15 (VGA)

AX 6020 - A 2 HP N - H D - 2 C

Axis & serial numbers	
AX	X axis

Table size / Travel stroke	
6020	60*60mm / 20mm
6030	60*70mm / 30mm

Connecting cable (optional)	
Blank	Not equipped
2	2m cable*1
4	4m cable*1
6	6m cable*1

*1 (D-SUB 15 pin female connector + the other side with discrete wirings)

Driver (optional)	
Blank	Not equipped
C	Standard specified by GMT

Model Number			AX6020-A2HPN-HD	AX6030-A2HPN-HD
Mechanical specifications	Table size		60X60 mm	60X70 mm
	Travel stroke		20 mm	30 mm
	Drive type		Ball screw Ø8 lead 1mm	
	Rail		Crossed-roller guiding	
	Stage material/Surface treatment		Aluminum alloy / Black anodized	
	Main unit weight		0.55 Kg	0.59 Kg
	Coupling		FAMMS12-4*5	FAMS12-5*5
	Accuracy level		High resolution grade	
	Wiring method		N : GMT Standard*2	
Precision specifications	Resolution (pulse)	Full / Half	1 μm / 0.5 μm	
	Maximum speed (full step)		10 mm / sec	
	Positioning precision		5 μm	
	Repeatability precision		±0.3 μm	
	Load capacity		5 Kgf	
	Missed step		1 μm	
	Parallelism		20 μm	
	Dynamic straightness		1 μm	
	Dynamic parallelism		6.6 μm	
Electrical specifications	Motor	Type/Shaft numbers	5-phase stepper / □39 double shafts	
		Brand/ Model	Sanyo / 103-4507-7010	
	Driver brand/Model		Please refer to motor / driver cross-reference table (page E3)	
	Connector	Stage side connector	15-pin male end connector D-SUB	
		Controller side connector	15-pin female end connector D-SUB (optional)	
	Sensor	Origin sensor	Hall sensor	
		Limit sensor		
		Origin approximation sensor	N / A	
		Power voltage	24V±10%	
		Control output	NPN open collector output under 24V 16mA	
		Output control	Testing (sensing) : output transistor OFF (closed)	

*2 GMT Standard wiring is defined as the product photo, and not optional available.

X axis

AX6020-A2HPN-HD

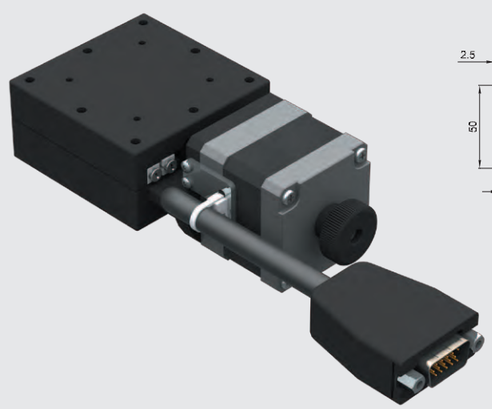

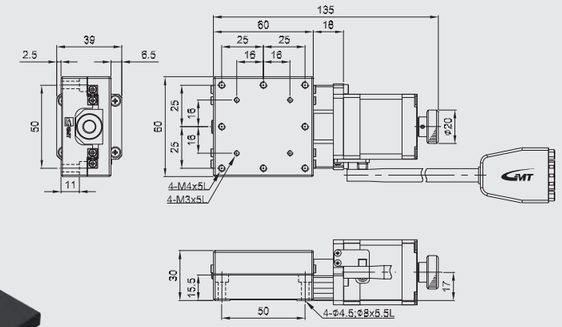

AX6030-A2HPN-HD

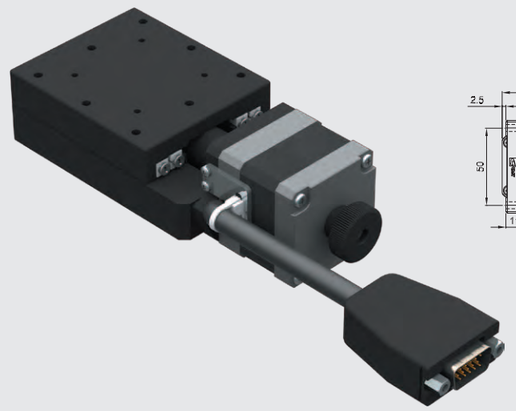

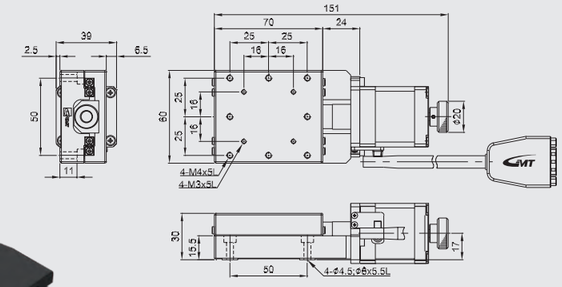

AX / HP series

Model description

Material	Drive type	Accuracy level	Wiring method	Motor model	Connector type
S Stainless steel	2 Ball screw	HP High resolution grade	R Right wiring L Left wiring	H High resolution 5-phase stepper X Not equipped	D D-SUB15 (VGA)

AX 7050 - S 2 HP R - H D - 2 C

Axis & serial numbers	Table size / Travel stroke	Connecting cable (optional)	Driver (optional)
AX X axis	7050 70*110mm / 50mm	Blank Not equipped 2 2m cable*1 4 4m cable*1 6 6m cable*1	Blank Not equipped C Standard specified by GMT

*1 (D-SUB 15 pin female connector + the other side with discrete wirings)

Model Number			AX7050-S2HPR-HD
Mechanical specifications	Table size		70X110 mm
	Travel stroke		50 mm
	Drive type		Ball screw Ø8 lead 1mm
	Rail		Linear ball guiding
	Stage material/Surface treatment		Stainless steel / Nickel plating
	Main unit weight		1.28 Kg
	Coupling		FAMS12-5*5
	Accuracy level		High resolution grade
	Wiring method		R：Right wiring
Precision specifications	Resolution (pulse)	Full / Half	1 μm / 0.5 μm
	Maximum speed (full step)		10 mm / sec
	Positioning precision		5 μm
	Repeatability precision		±0.5 μm
	Load capacity		10 Kgf
	Missed step		1 μm
	Parallelism		15 μm
	Dynamic straightness		2 μm
	Dynamic parallelism		6.6 μm
Electrical specifications	Motor	Type/Shaft numbers	5-phase stepper / □39 double shafts
		Brand/ Model	Sanyo / 103-4507-7010
	Driver brand/Model		Please refer to motor / driver cross-reference table (page E3)
	Connector	Stage side connector	15-pin male end connector D-SUB
		Controller side connector	15-pin female end connector D-SUB (optional)
	Sensor	Origin sensor	Photoelectric sensor EE-SX4134
		Limit sensor	
		Origin approximation sensor	N / A
		Power voltage	24V±10%
		Control output	NPN open collector output under 24V 8mA
		Output control	Testing (sensing)：output transistor OFF (closed)

X axis

AX7050-S2HPR-HD

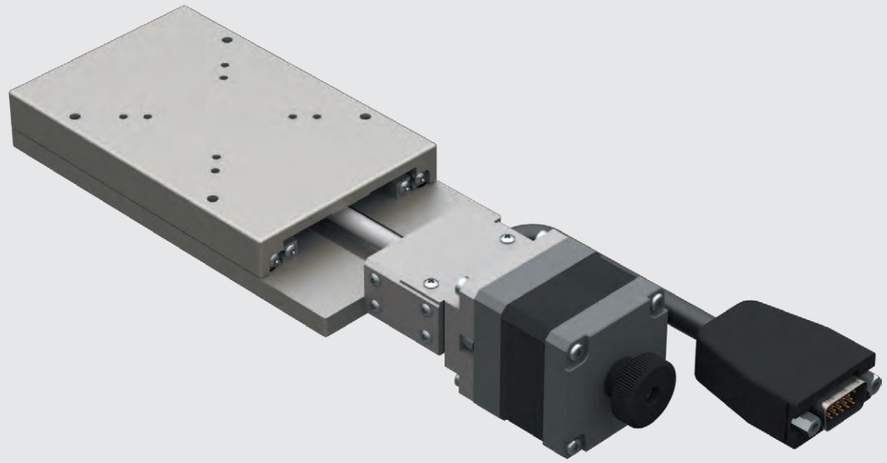

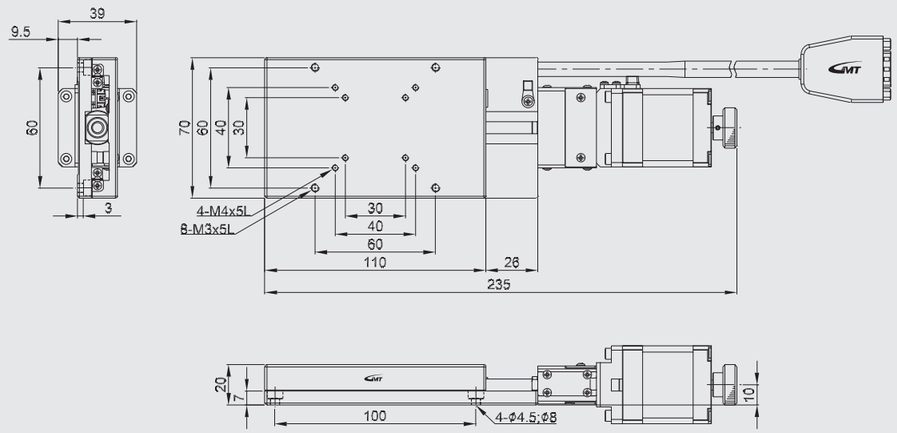

AZ / HP series

Model description

Material	Drive type	Accuracy level	Wiring method	Motor model	Connector type
A Aluminum alloy	6 Ball screw and Slide wedge	HP High resolution grade	R Right wiring L Left wiring	H High resolution 5-phase stepper X Not equipped	D D-SUB15 (VGA)

AZ 7010 - A 6 HP R - H D - 2 C

Axis & serial numbers	Table size / Travel stroke	Connecting cable (optional)	Driver (optional)
AZ Z axis (Elevator)	7010 70*70mm / 10mm	Blank Not equipped 2 2m cable*1 4 4m cable*1 6 6m cable*1	Blank Not equipped C Standard specified by GMT

*1 (D-SUB 15 pin female connector + the other side with discrete wirings)

Model Number			AZ7010-A6HPR-HD
Mechanical specifications	Table size		70X70 mm
	Travel stroke		10 mm
	Drive type		Ball screw Ø8 lead 1mm
	Rail		Crossed-roller guiding
	Stage material/Surface treatment		Aluminum alloy / Black anodized
	Main unit weight		1.1 Kg
	Coupling		FAMMS16-5*5
	Accuracy level		High resolution grade
	Wiring method		R : Right wiring
Precision specifications	Resolution (pulse)	Full / Half	0.5 μm / 0.25 μm
	Maximum speed (full step)		5 mm / sec
	Positioning precision		5 μm
	Repeatability precision		±0.5 μm
	Load capacity		10 Kgf
	Missed step		1 μm
	Parallelism		20 μm
	Dynamic straightness		5 μm
	Dynamic parallelism		26.5 μm
Electrical specifications	Motor	Type/Shaft numbers	5-phase stepper / □39 double shafts
		Brand/ Model	Sanyo / 103-4507-7010
	Driver brand/Model		Please refer to motor / driver cross-reference table (page E3)
	Connector	Stage side connector	15-pin male end connector D-SUB
		Controller side connector	15-pin female end connector D-SUB (optional)
	Sensor	Origin sensor	Photoelectric sensor EE-SX498
		Limit sensor	
		Origin approximation sensor	N / A
		Power voltage	24V±10%
		Control output	NPN open collector output under 24V 8mA
		Output control	Testing (sensing) : output transistor OFF (closed)

Hi-Resolution Precision Motorized **Z axis Elevator Stage** ▶ Crossed-roller guiding & Slide wedge driven
AZ / HP series
GMT GLOBAL INC.

Z axis

AZ7010-A6HPR-HD

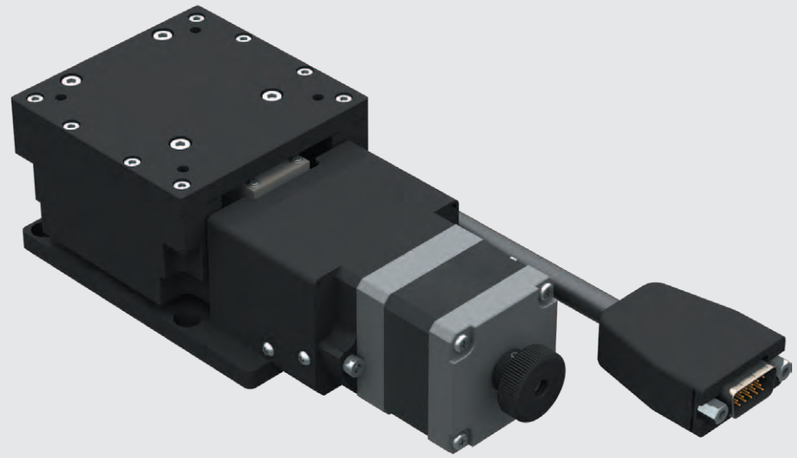

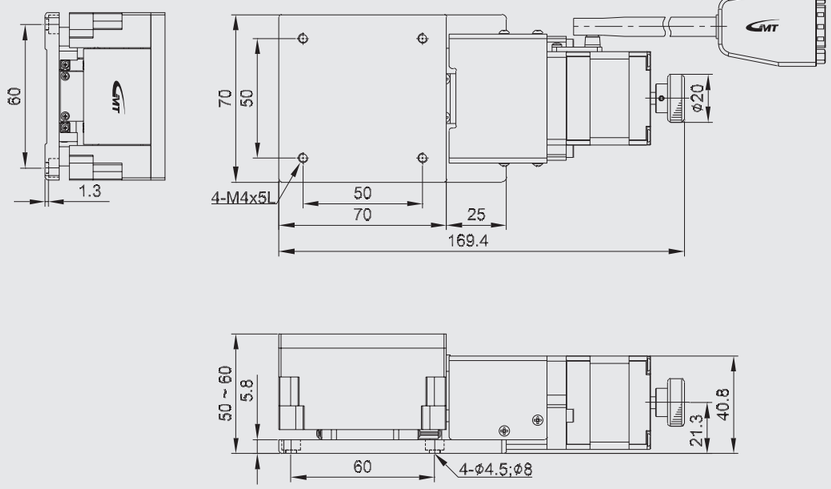

AZ / HP series

Model description

Material	Drive type	Accuracy level	Wiring method	Motor model	Connector type
A Aluminum alloy	6 Ball screw and Slide wedge	HP High resolution grade	R Right wiring L Left wiring	H High resolution 5-phase stepper X Not equipped	D D-SUB15 (VGA)

AZ 60 - A 6 HP R - H D - 2 C

Axis & serial numbers	
AZ	Z axis (Elevator)

Table size	
60	60*87mm
70	70*75mm

Connecting cable (optional)	
Blank	Not equipped
2	2m cable*1
4	4m cable*1
6	6m cable*1

*1 (D-SUB 15 pin female connector + the other side with discrete wirings)

Driver (optional)	
Blank	Not equipped
C	Standard specified by GMT

Model Number			AZ60-A6HPR-HD	AZ70-A6HPR-HD
Mechanical specifications	Table size		60X87 mm	70X75 mm
	Travel stroke		4 mm	
	Drive type		Ball screw Ø8 lead 1mm, slide wedge	
	Rail		Crossed-roller guiding	
	Stage material/Surface treatment		Aluminum alloy / Black anodized	
	Main unit weight		1.08 Kg	1.09 Kg
	Coupling		FAMS12-5*5	
	Accuracy level		High resolution grade	
	Wiring method		R : Right wiring	
Precision specifications	Resolution (pulse)	Full / Half	0.25 μm / 0.125 μm	
	Maximum speed (full step)		2.5 mm / sec	
	Positioning precision		5 μm	
	Repeatability precision		±0.5 μm	
	Load capacity		8 Kgf	
	Missed step		1 μm	
	Parallelism		30 μm	
	Dynamic straightness		5 μm	
	Dynamic parallelism		20 μm	
Electrical specifications	Motor	Type/Shaft numbers	5-phase stepper / □39 double shafts	
		Brand/ Model	Sanyo / 103-4507-7010	
	Driver brand/Model		Please refer to motor / driver cross-reference table (page E3)	
	Connector	Stage side connector	15-pin male end connector D-SUB	
		Controller side connector	15-pin female end connector D-SUB (optional)	
	Sensor	Origin sensor	Photoelectric sensor EE-SX498	
		Limit sensor		
		Origin approximation sensor	Photoelectric sensor EE-SX912-R	
		Power voltage	24V±10%	
		Control output	NPN open collector output under 24V 8mA	
		Output control	Testing (sensing) : output transistor OFF (closed)	

AZ60-A6HPR-HD

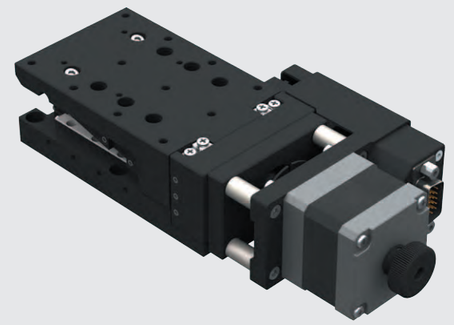

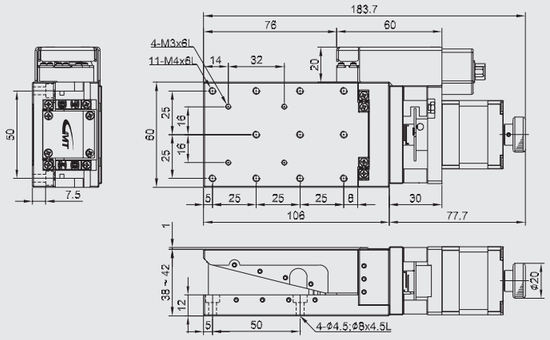

AZ70-A6HPR-HD

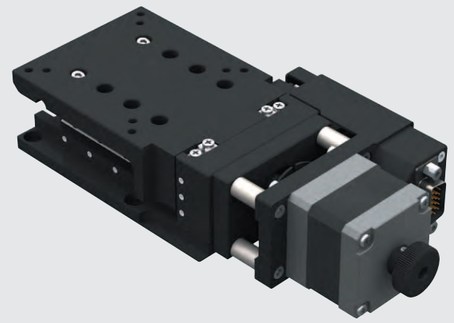

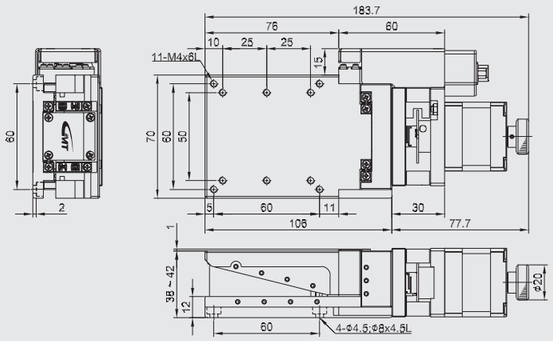

Electrical specifications

Male end connector PIN layout & definition

Models	40&60
	AX、AY、AZL、AXZ、AXYZ

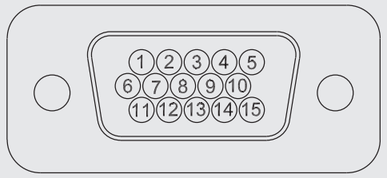

Wiring diagram

1	Motor lead A
2	Motor lead B
3	Motor lead C
4	Motor lead D
5	Motor lead E
6	CWLS output
7	CCWLS output
8	Not used
9	Power input (DC24V)
10	Stage travel stroke ORG1 output
11	Power input (DC 0V)
12	Ground
13	Not used
14	Not used
15	Not used

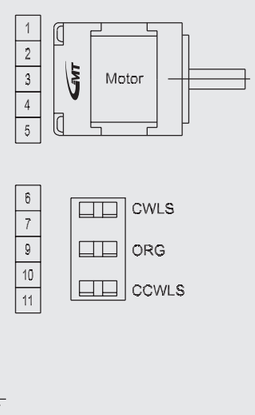

Sequence diagram

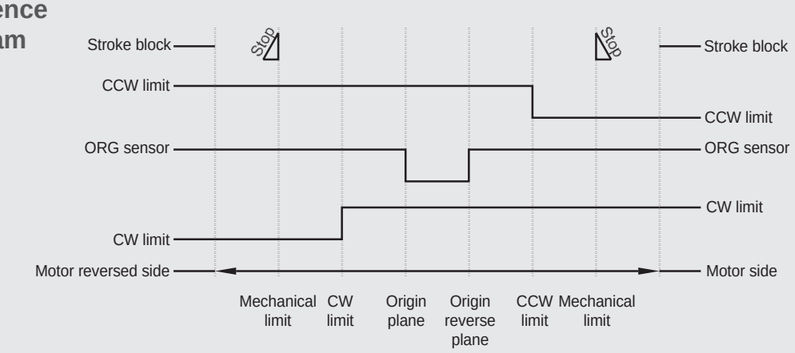

Stage sensor location diagram

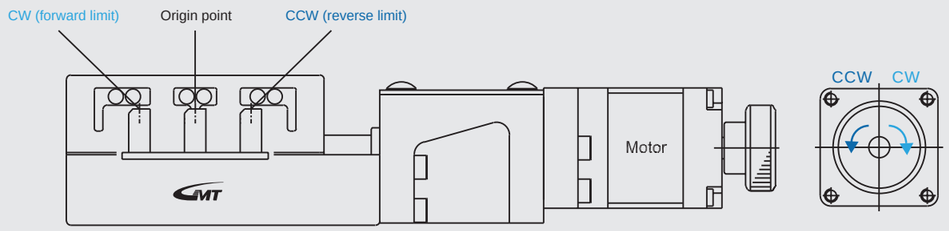

Electrical specifications

Male end connector PIN layout & definition

Models	80&100&120
	AX、AY、AZL、AXZ、AXYZ

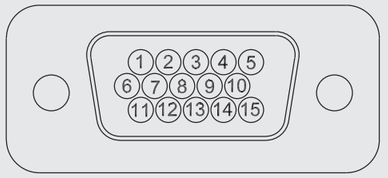

Wiring diagram

1	Motor lead A
2	Motor lead B
3	Motor lead C
4	Motor lead D
5	Motor lead E
6	CWLS output
7	CCWLS output
8	Motor rotary ORG2 output
9	Power input (DC24V)
10	Stage travel stroke ORG1 output
11	Power input (DC 0V)
12	Ground
13	Not used
14	Not used
15	Not used
16	Not used

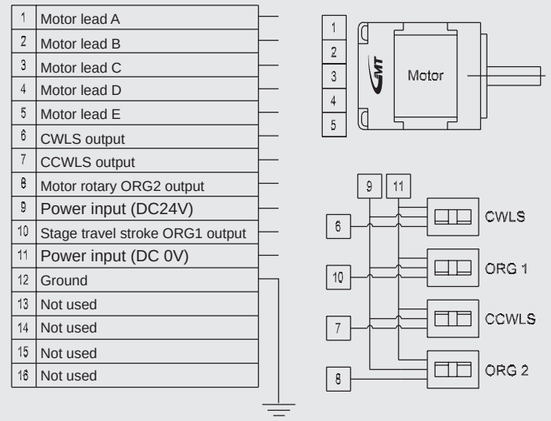

Sequence diagram

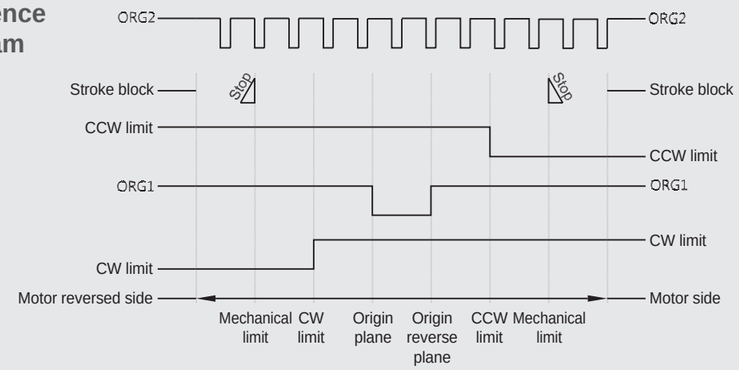

Stage sensor location diagram

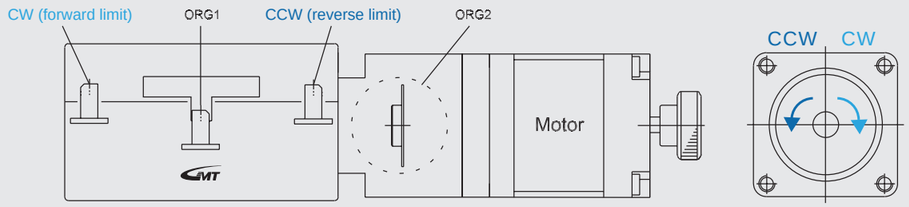

Electrical specifications

Male end connector PIN layout & definition

Models: AXL、AYL / AXC、AYC / AXW、AYW

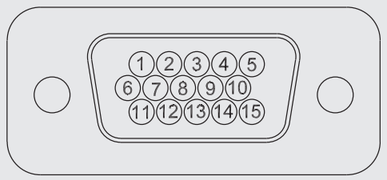

Wiring diagram

1	Motor lead A
2	Motor lead B
3	Motor lead C
4	Motor lead D
5	Motor lead E
6	CWLS output
7	CCWLS output
8	Motor rotary ORG2 output
9	Power input (DC24V)
10	Stage travel stroke ORG1 output
11	Power input (DC 0V)
12	Ground
13	Not used
14	Not used
15	Not used
16	Not used

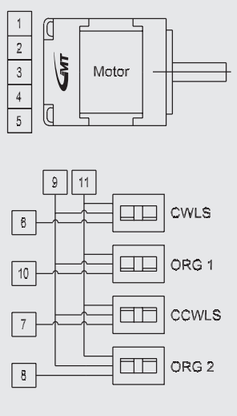

Sequence diagram

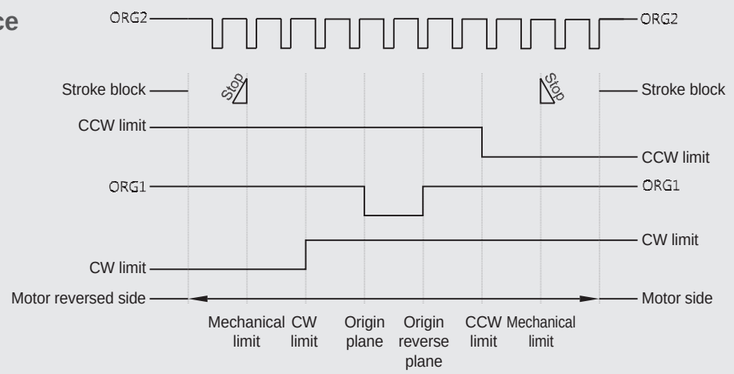

Stage sensor location diagram

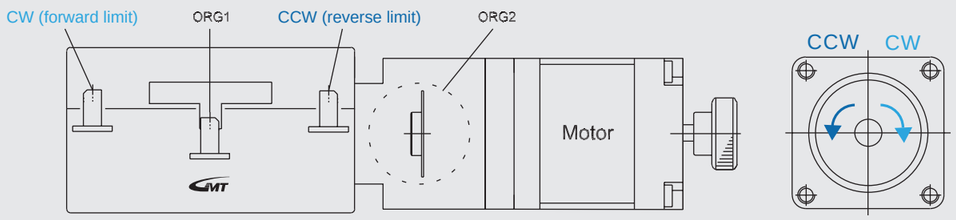

Electrical specifications

Male end connector PIN layout & definition

Models: CXS、CYS、CZLS、CXZS、CXYZS

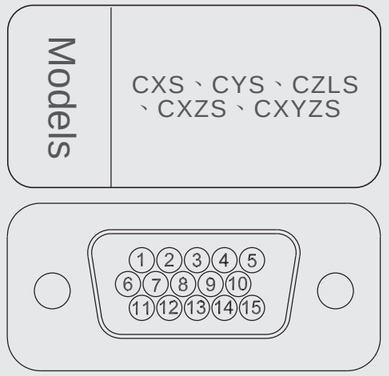

Wiring diagram

1	Motor lead A
2	Motor lead B
3	Motor lead C
4	Motor lead D
5	Motor lead E
6	CWLS output
7	CCWLS output
8	Not used
9	Power input (DC24V)
10	Stage travel stroke ORG1 output
11	Power input (DC 0V)
12	Ground
13	Not used
14	Not used
15	Not used

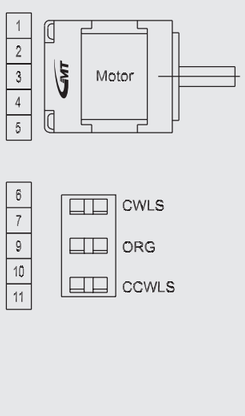

Sequence diagram

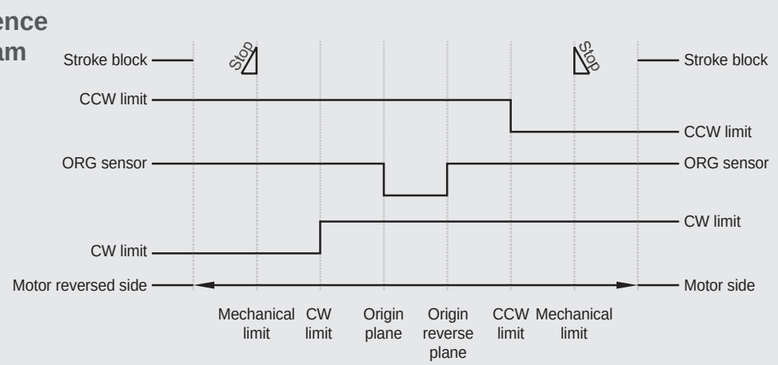

Stage sensor location diagram

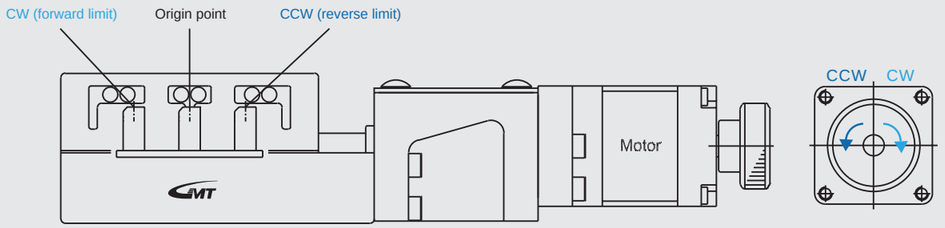

Electrical specifications

Male end connector PIN layout & definition

Models	
	CXN、CYN、CZLN、CXZN、CXYZN
	CXC、CYC、CZLC、CXZC、CXYZC

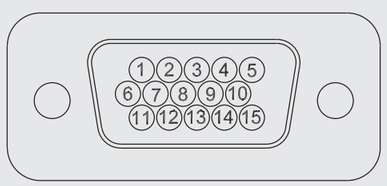

Wiring diagram

1	Motor lead A
2	Motor lead B
3	Motor lead C
4	Motor lead D
5	Motor lead E
6	CWLS output
7	CCWLS output
8	Not used
9	Power input (DC24V)
10	Stage travel stroke ORG1 output
11	Power input (DC 0V)
12	Ground
13	Not used
14	Not used
15	Not used

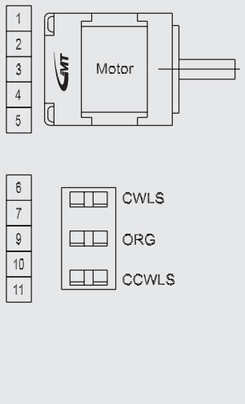

Sequence diagram

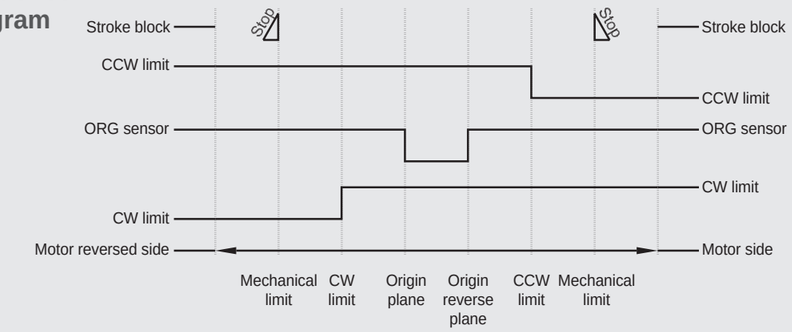

Stage sensor location diagram

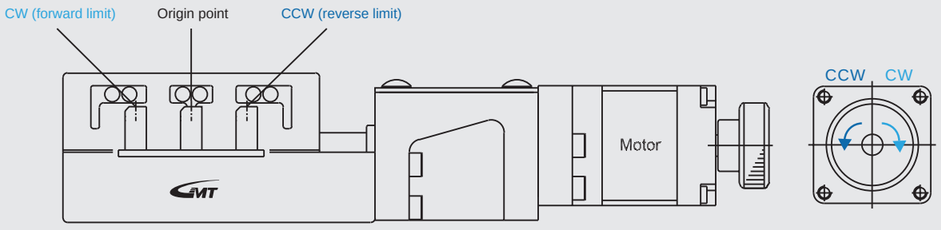

Electrical specifications

Male end connector PIN layout & definition

Models	
	9010&9020
	AZV

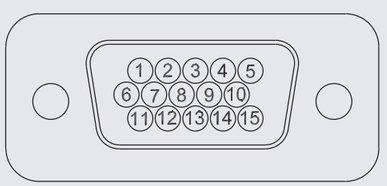

Wiring diagram

1	Motor lead A
2	Motor lead B
3	Motor lead C
4	Motor lead D
5	Motor lead E
6	CWLS output
7	CCWLS output
8	Not used
9	Power input (DC24V)
10	Stage travel stroke ORG1 output
11	Power input (DC 0V)
12	Ground
13	Not used
14	Not used
15	Not used

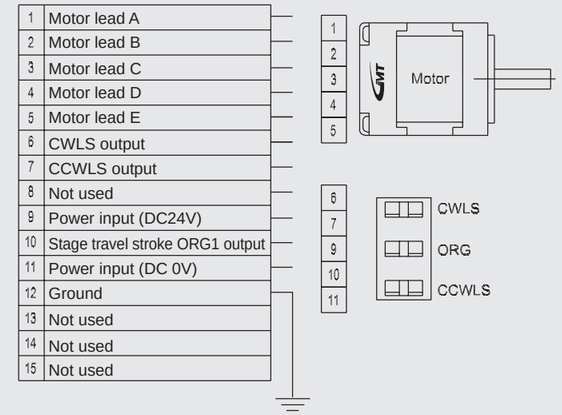

Sequence diagram

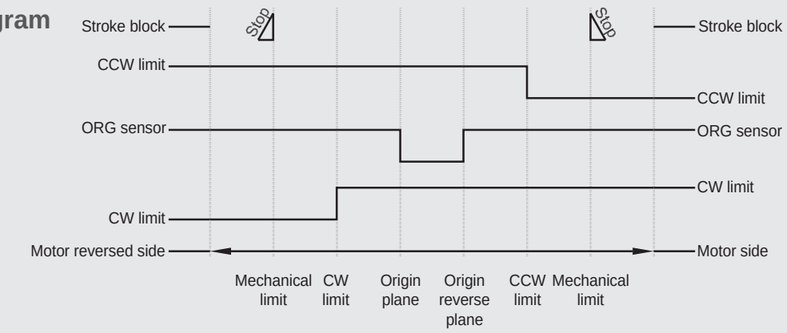

Stage sensor location diagram

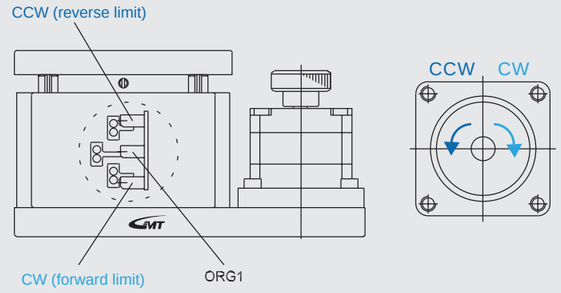

Electrical specifications

Male end connector PIN layout & definition

Models	39&59
	AR

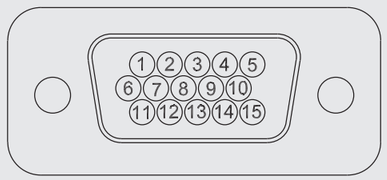

Wiring diagram

1	Motor lead A
2	Motor lead B
3	Motor lead C
4	Motor lead D
5	Motor lead E
6	Not used
7	Not used
8	Not used
9	Power input (DC24V)
10	Stage travel stroke ORG1 output
11	Power input (DC 0V)
12	Ground
13	Not used
14	Not used
15	Not used

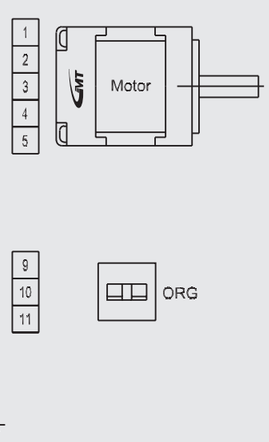

Sequence diagram

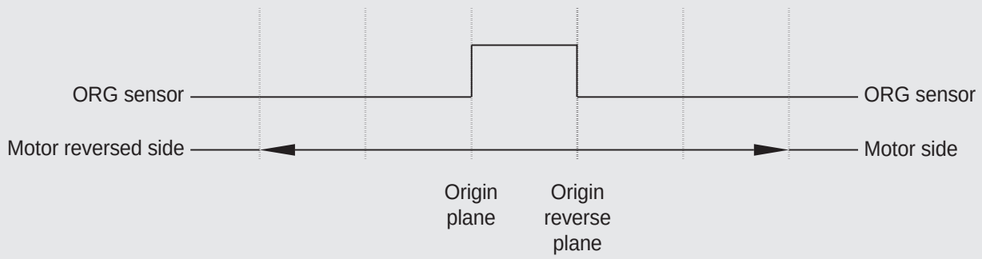

Stage sensor location diagram

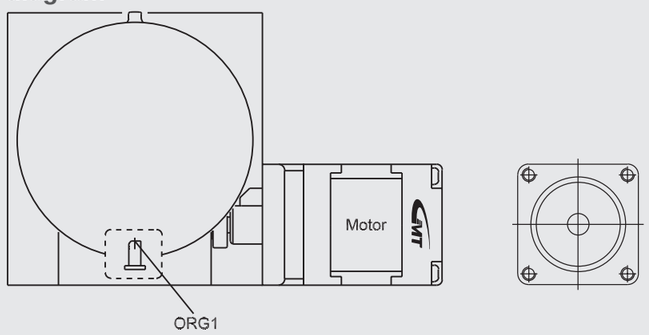

Electrical specifications

Male end connector PIN layout & definition

Models	79&100&120 &159&179
	AR

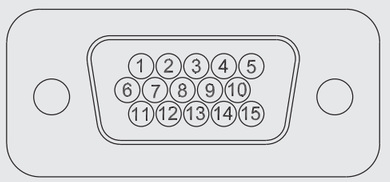

Wiring diagram

1	Motor lead A
2	Motor lead B
3	Motor lead C
4	Motor lead D
5	Motor lead E
6	CWLS output
7	CCWLS output
8	Not used
9	Power input (DC24V)
10	Stage travel stroke ORG1 output
11	Power input (DC 0V)
12	Ground
13	Not used
14	Not used
15	Not used

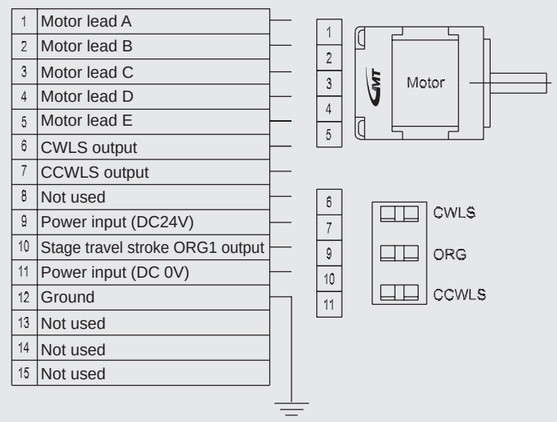

Sequence diagram

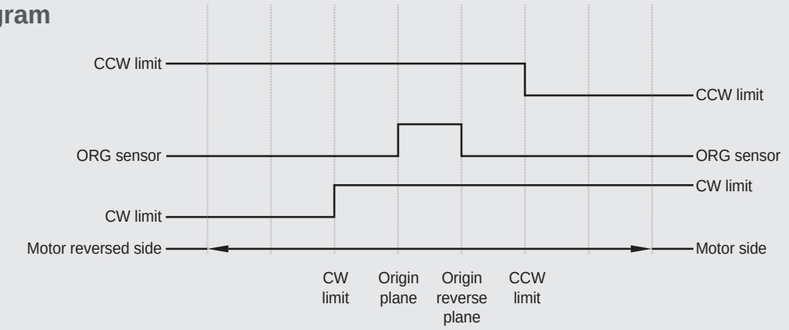

Stage sensor location diagram

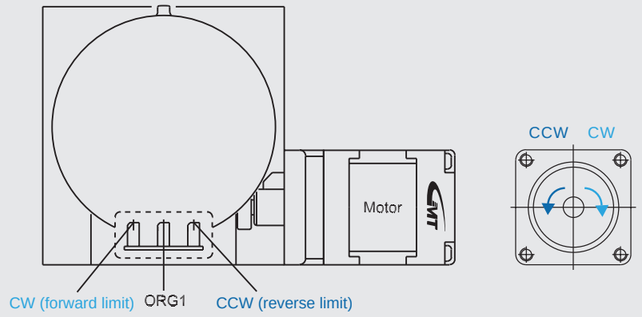

Electrical specifications

Male end connector PIN layout & definition

Models	AXG、AYG

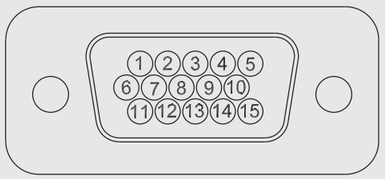

Wiring diagram

1	Motor lead A
2	Motor lead B
3	Motor lead C
4	Motor lead D
5	Motor lead E
6	CWLS output
7	CCWLS output
8	Not used
9	Power input (DC24V)
10	Stage travel stroke ORG1 output
11	Power input (DC 0V)
12	Ground
13	Not used
14	Not used
15	Not used

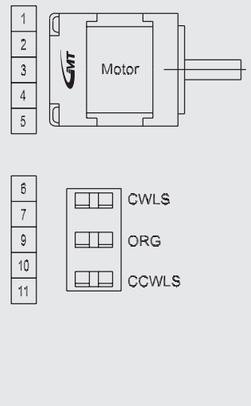

Sequence diagram

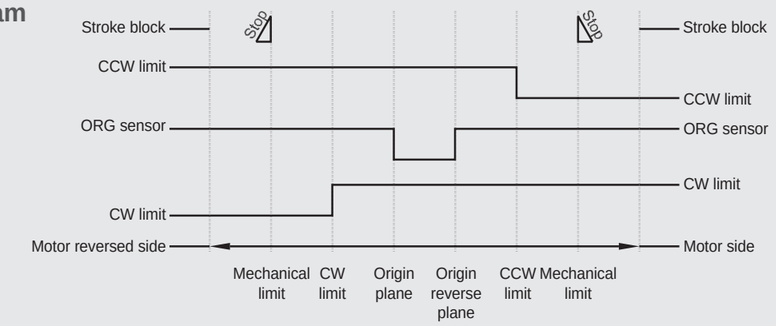

Stage sensor location diagram

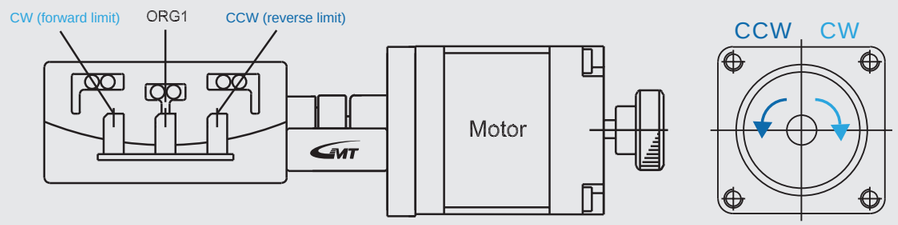

Electrical specifications

Male end connector PIN layout & definition

Models	6020&6030 &7050
	AX / HP

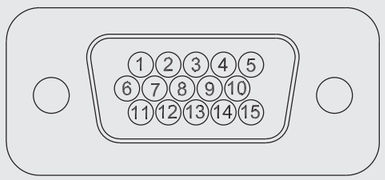

Wiring diagram

1	Motor lead A
2	Motor lead B
3	Motor lead C
4	Motor lead D
5	Motor lead E
6	CWLS output
7	CCWLS output
8	Not used
9	Power input (DC24V)
10	Stage travel stroke ORG1 output
11	Power input (DC 0V)
12	Ground
13	Not used
14	Not used
15	Not used

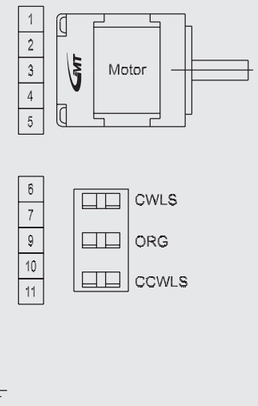

Sequence diagram

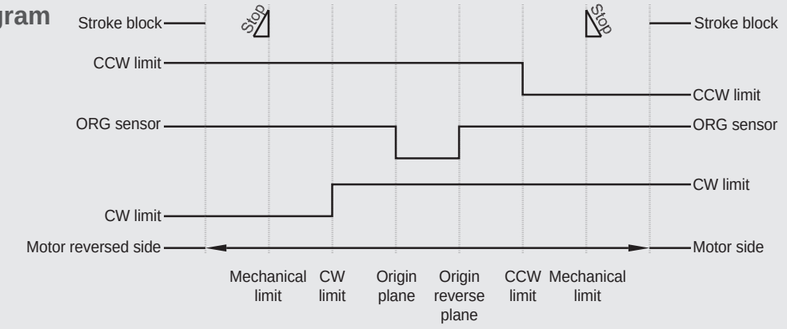

Stage sensor location diagram

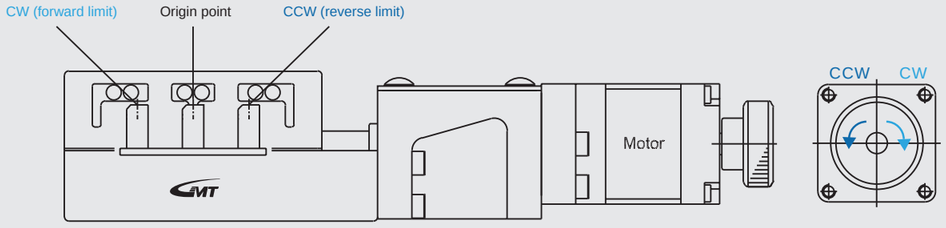

Electrical specifications

Male end connector PIN layout & definition

Models	7010
	AZ / HP

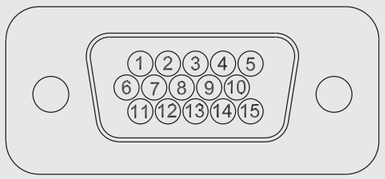

Wiring diagram

1	Motor lead A
2	Motor lead B
3	Motor lead C
4	Motor lead D
5	Motor lead E
6	CWLS output
7	CCWLS output
8	Not used
9	Power input (DC24V)
10	Stage travel stroke ORG1 output
11	Power input (DC 0V)
12	Ground
13	Not used
14	Not used
15	Not used

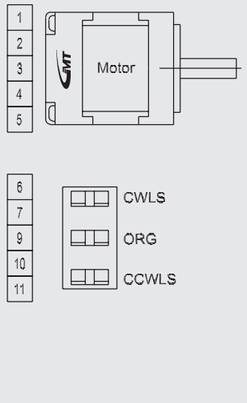

Sequence diagram

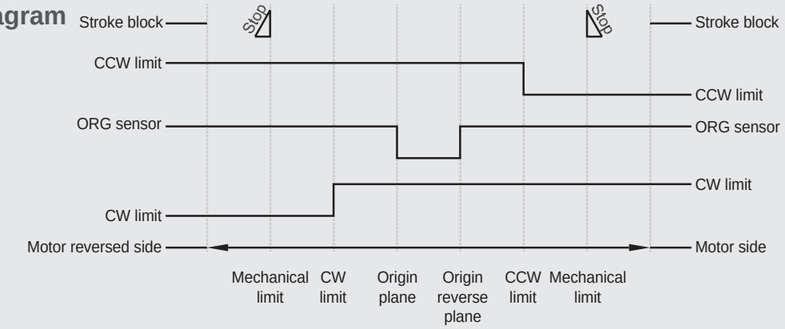

Stage sensor location diagram

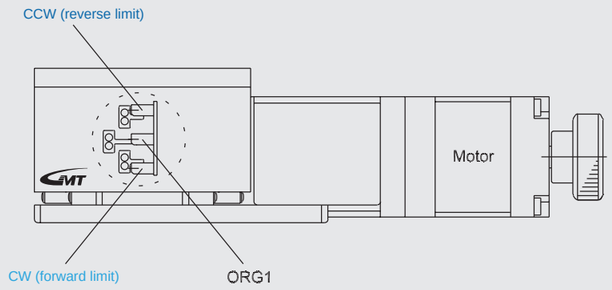

Electrical specifications

Male end connector PIN layout & definition

Models	60&70
	AZ / HP

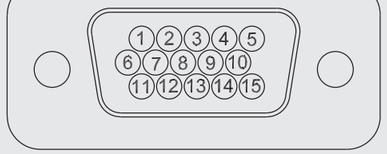

Wiring diagram

1	Motor lead A
2	Motor lead B
3	Motor lead C
4	Motor lead D
5	Motor lead E
6	CWLS output
7	CCWLS output
8	Not used
9	Power input (DC24V)
10	Stage travel stroke ORG1 output
11	Power input (DC 0V)
12	Ground
13	Not used
14	Not used
15	Not used
16	Not used

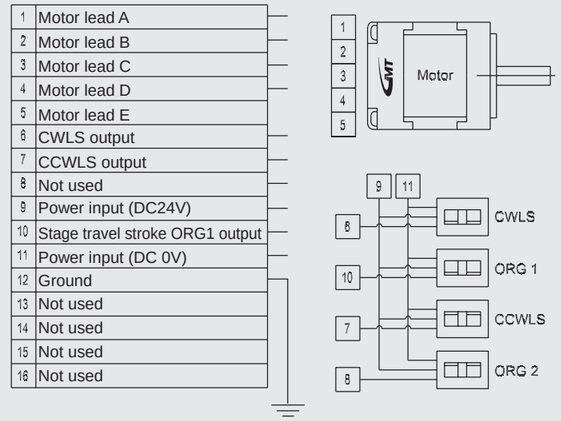

Sequence diagram

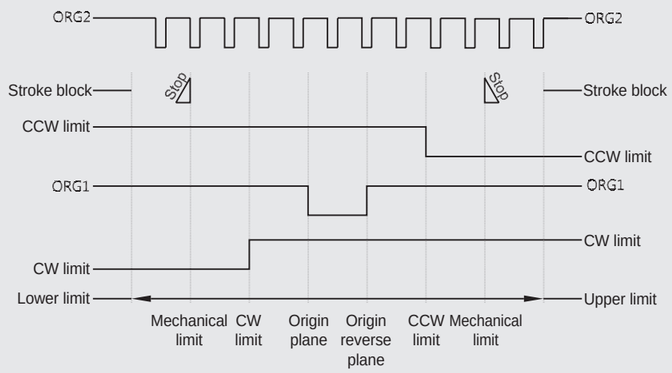

Stage sensor location diagram

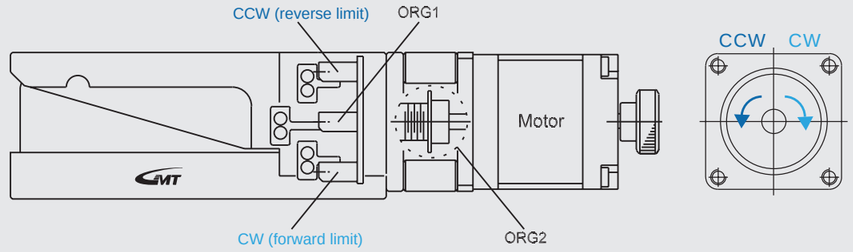

Designated stage connector

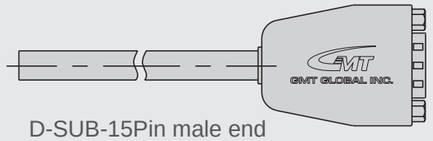

D-SUB-15Pin male end

- For **GMT** full-series motorized stage has been integrated D-SUB connector as default designed connector.
- Standard connecting cable is corresponding connection type for stage side which is including single-sided connector in 2 m long with discrete 15 wires as common accessory stocked for optional purchasing.
- D-SUB standard connecting cable, D-SUB TO HRS converting cable, D-SUB TO NJC converting cable are all optional accessories (sold separately).
- If you use HRS/NJC originally, you can choose D-SUB TO HRS/D-SUB TO NJC converting cable for conversion.
- When standard connecting cable is used, please make insulation treatment on the unused wires at the discrete wire end.
- Connecting cable length over 6 m may cause abnormal operation.
- Minimum bendable radius of connecting cable is 5 times the cable diameter.

Connecting Cable

Standard connecting cable

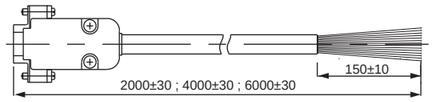

Model: AW1C2A2-2; AW1C2A2-4; AW1C2A2-6 Unit: mm

Stage side is D-SUB female end			Control side single-sided discrete wire 15 wires
Motor lead A	1	Green line/black spot 1	Control side corresponding connection points
Motor lead B	2	Green line/red spot 2	
Motor lead C	3	Pink line/black spot 3	
Motor lead D	4	Pink line/red spot 4	
Motor lead E	5	Blue line/black spot 5	
CWLS output	6	Blue line/red spot 6	
CCWLS output	7	White line/black spot 7	
Motor rotary ORG2 output	8	White line/red spot 8	
Power input (+)	9	Gray line/black spot 9	
Stage travel stroke ORG1 output	10	Gray line/red spot 10	
Power input (-)	11	Yellow line/black spot 11	
Ground ⏚	12	Yellow line/red spot 12	
Not used	13	Not used 13	
Not used	14	Not used 14	
Not used	15	Not used 15	

Converting Cable

D-SUB TO NJC converting cable

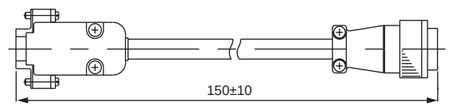

Model: AW2C2L4-0.15 Unit: mm

Stage side is D-SUB female end			Control side NJC male end
Motor lead A	1	Green line/black spot 1	Motor lead A
Motor lead B	2	Green line/red spot 2	Motor lead B
Motor lead C	3	Pink line/black spot 3	Motor lead C
Motor lead D	4	Pink line/red spot 4	Motor lead D
Motor lead E	5	Blue line/black spot 5	Motor lead E
CWLS output	6	Blue line/red spot 6	CWLS output
CCWLS output	7	White line/black spot 8	CCWLS output
Motor rotary ORG2 output	8	White line/red spot 11	Motor rotary ORG2 output
Power input (+)	9	Gray line/black spot 10	Power input (+)
Stage travel stroke ORG1 output	10	Gray line/red spot 14	Stage travel stroke ORG1 output
Power input (-)	11	Yellow line/black spot 15	Power input (-)
Ground ⏚	12	Yellow line/red spot 16	Ground ⏚
Not used	13	Not used 9	Not used
Not used	14	Not used 12	Not used
Not used	15	Not used 13	Not used
		7	Not used

Converting Cable

D-SUB TO HRS converting Cable

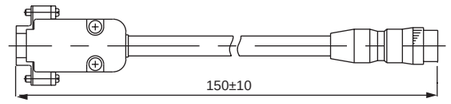

Model: AW2C2G0-0.15 Unit: mm

Stage side is D-SUB female end			Control side HRS male end
Motor lead A	1	Green line/black spot 1	Motor lead A
Motor lead B	2	Green line/red spot 2	Motor lead B
Motor lead C	3	Pink line/black spot 3	Motor lead C
Motor lead D	4	Pink line/red spot 4	Motor lead D
Motor lead E	5	Blue line/black spot 5	Motor lead E
CWLS output	6	Blue line/red spot 6	CWLS output
CCWLS output	7	White line/black spot 7	CCWLS output
Motor rotary ORG2 output	8	White line/red spot 8	Motor rotary ORG2 output
Power input (+)	9	Gray line/black spot 9	Power input (+)
Stage travel stroke ORG1 output	10	Gray line/red spot 10	Stage travel stroke ORG1 output
Power input (-)	11	Yellow line/black spot 11	Power input (-)
Ground ⏚	12	Yellow line/red spot 12	Ground ⏚
Not used	13		
Not used	14		
Not used	15		

Precision model equipped	Equipped motor classification	A group	B group	C group	D group	E group
	Motor manufacturer	Sanyo				
	Motor model	SH5281-7211	SH5285-7211	103-4507-7010	103F5510-8211	103F5505-8211
	Rated current	0.75A	0.75A	0.75A	1.4A	1.4A
	Size	☐ 28X32	☐ 28X51.5	☐ 39X35.5	☐ 42X49	☐ 42X34
	Step angle	0.72°	0.72°	0.36°	0.72°	0.72°
	Magnetizing maximum static torque	0.041N-m	0.078N-m	0.108N-m	0.245 N-m	0.127 N-m
	Rotor inertia (Kg*m^2)	0.01×10^{-4}	0.022×10^{-4}	0.024×10^{-4}	0.065×10^{-4}	0.03×10^{-4}
	Suggested driver Brand/model (optional)	TOHAN DENSHI KIKI CO.,LTD. / GTD-5D14C GMT / GTR515B				
Equipped motor classification		A group	B group	C group	D group	E group
Applicable platform (Only list single-axis model)		AX40-A2P AX60-A2P AXL4015-A2P AXL6020-A2P AXL8030-A2P AXL10040-A2P AXL12050-A2P AXC6020-A2P AXC8030-A2P AXC10040-A2P AXC12050-A2P CXS5020-S2P CXS5030-S2P CXS6020-S2P CXS6030-S2P CXS6050-S2P CXS8020-S2P CXS8030-S2P CXS8050-S2P CXC(N)5050-S2P CXC(N)5075-S2P CXC(N)6050-S2P CXC(N)6075-S2P CXC(N)8050-S2P CXC(N)8075-S2P AR39-A3P AR59-A3P AXG4-☐VM3P AXG5-☐VM3P AXG6-☐VM3P	CXC(N)50100-S2P CXC(N)50150-S2P CXC(N)50200-S2P CXC(N)60100-S2P CXC(N)60150-S2P CXC(N)60200-S2P CXC(N)60250-S2P CXC(N)60300-S2P CXC(N)80100-S2P CXC(N)80150-S2P CXC(N)80200-S2P CXC(N)80250-S2P CXC(N)80300-S2P	AZ60-A6HP AZ70-A6HP AX6020-A2HP AX6030-A2HP AX7050-S2HP AZ7010-A6HP	AX80-A2P AX100-A2P AX120-A2P AXW8030-F2P AXW10040-F2P AXW12050-F2P AR100-A3P AR120-A3P AR159-A3P AR179-A3P	AR79-A3P AZV9010-A8P AZV9020-A8P

※ 5-phase stepper motor is the specification selected in Precision grade, and 2-phase stepper motor is listed as reference only.

※ The most preferred driver is recommended to be specified by GMT as considerations. For different needs, please choose the suitable driver based on real functional needs.

Driver description

- Standard stepper motor driver V.S. micro stepper driver difference
  1. Full-stepper driver: use rotor teeth to drive stator teeth
  2. Half-stepper driver: achieved by movement of teeth to teeth until teeth to the middle of two teeth
  3. Micro stepping driver: based on half-step technology, use electronic phase separation to achieve higher resolution.
- Micro stepper driver V.S. half/full stepper driver
  Advantage: higher resolution
  Shortcoming: unequal division of electronic sub-phase angle, higher temperature rise and higher driver price.
- Micro stepper calculation equation: number of pulse required per revolution $\frac{360°}{\text{step}}$ X micro stepper division number
- Set driver output current within motor rated current range to prevent motor overheat to affect product precision and life.
- Maximum speed is when the driver is at full step and zero load. The driven value and actual value can be different due to the following facts.
  1. When the driver and controller are different.
  2. The setup current is different from acceleration and deceleration.
  3. At different load.

Suggested equipped models/optional	Equipped motor classification	A group	B group	C group	D group	E group
	Motor model/Shaft numbers		Japanese brand	5-phase stepper/dual extension shafts		
	Motor manufacturer	N/A	N/A	N/A	TAMAGAWA	
	Motor models				TS36667N13E7	TS36667N11E3
	Rated current				0.75A	1.4A
	Size				☐42X47	☐42X33
	Stepping angle				0.72°	0.72°
	Magnetizing maximum static torque				0.24 N-m	0.13 N-m
	Rotor inertia(Kg*m^2)				0.068×10^{-4}	0.035×10^{-4}
	Suggested driver Brand/model (optional)				TOHAN DENSHI KIKI CO.,LTD. / eTD-24A GMT / GTR515B	

Suggested equipped models/optional	Equipped motor classification	A group	B group	C group	D group	E group
	Motor model/Shaft numbers		Japanese brand	2-phase stepper/dual extension shafts		
	Motor manufacturer	TAMAGAWA		SANYO	TAMAGAWA	
	Motor models	TS3641N11E2	TS3641N12E3	SH3537-12U10	TS3617N13E8	TS3617N11E1
	Rated current	1.5A	1.4A	1.2A	1.2A	0.95A
	Size	☐28X33	☐28X47.5	☐35X37	☐42X47	☐42X33
	Step angle	1.8°	1.8	1.8°	1.8°	1.8°
	Magnetizing maximum static torque	0.05 N-m	0.09 N-m	0.15N-m	0.32 N-m	0.16 N-m
	Rotor inertia(Kg*m^2)	0.008×10^{-4}	0.018×10^{-4}	0.025×10^{-4}	0.068×10^{-4}	0.035×10^{-4}
	Suggested driver Brand/model (optional)	TOHAN DENSHI KIKI CO.,LTD. / eTD-24A GMT / GTR24M2				

Suggested equipped models/optional	Equipped motor classification	A group	B group	C group	D group	E group
	Motor model/Shaft numbers		Japanese brand	2-phase stepper/dual extension shafts		
	Motor manufacturer	SANYO	SANYO	N/A	SANYO	SANYO
	Motor models	SH2281-5231	SH2285-5231		103H5210-0410	103H5205-0410
	Rated current	1A	1A		1.2A	1.2A
	Size	☐28X32	☐ 28X51.5		☐42X48	☐42X34
	Step angle	1.8°	1.8		1.8°	1.8°
	Magnetizing maximum static torque	0.07 N-m	0.145 N-m		0.37 N-m	0.2 N-m
	Rotor inertia(Kg*m^2)	0.01×10^{-4}	0.022×10^{-4}		0.074×10^{-4}	0.035×10^{-4}
	Suggested driver Brand/model (optional)	TOHAN DENSHI KIKI CO.,LTD. / eTD-24A GMT / GTR24M2			TOHAN DENSHI KIKI CO.,LTD. / eTD-24A GMT / GTR24M2	

※ 2-phase stepper motor is suggested selection. It is listed as reference.
※ The most preferred driver is recommended to be specified by GMT as considerations. For different needs, please choose the suitable driver based on real functional needs.
※ Use the suggested stepper motor. If other stepper motor is used, it may cause operation unable to reach the value indicated in catalog.

Precision Motorized stage and suggested Servo motor/drive cross-reference table

Replace equipped servo motor (optional)	Equipped motor classification	Motor brand	Wattage/Frame size	Motor models	Driver model
	D group / E group	Mitsubishi	50W / ☐40	HG-KR053	MR-J410A
			100W / ☐40	HG-KR13	MR-J410A
		Panasonic	50W / ☐38	MSMD5AZG1S	MADHT1505
			100W / ☐38	MSMD012G1S	MADHT1505
		Delta	100W / ☐40	ECMA-C10401ES	ASD-A2-0121-L

※ If it is replaced with servo motor, it must be custom project and note the following:
1. The default designed stepper motor has to be 42 mm frame size which is available to be replaced by suggested servo motor.
2. Need to clarify on issues such as the stage installation space, motor sticking out of installation surface etc.
3. May need to add new worm screw or ball screw to connect to the coupling shaft.
4. Need to replace motor mount or change motor installation method and sequence.
5. Need to replace suitable coupling.

Power-off brake is mainly used when power is off, with or without load, and several internal springs provide braking force. Such structure provides a good reliability. A typical application is Z-axis motorized stage to prevent slip and fall after power off.

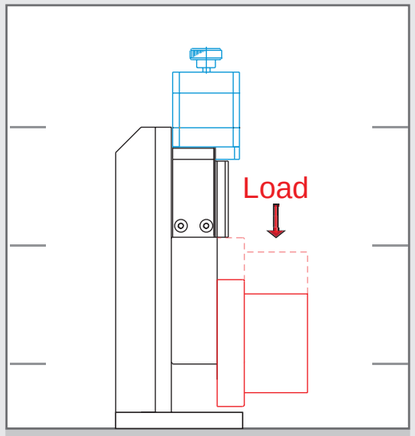

Without electromagnetic brake mechanism:
If the mechanism is used in vertical direction, it may naturally slide down due to overloaded top board or power off.

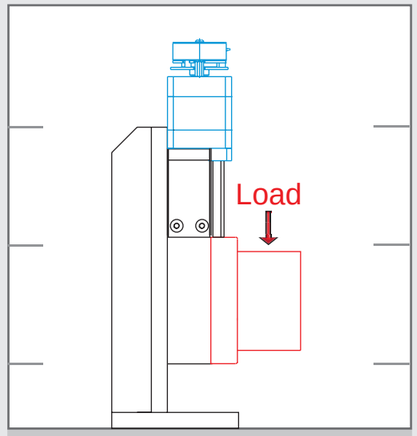

With electromagnetic brake mechanism:
If the mechanism is used in vertical direction, using stepper motor with electromagnetic brake can prevent natural slide down due to overload or power off.

※ In use, please be careful that the driver does not produce torque after power is on. Please do not release brake until the motor maintains a torque.

Specification introduction (for electromagnetic brake type stepper motor, please refer to GMT motor and driver catalog).

Static friction torque〔Kgm〕(Nm)	0.012(0.12)
Input power	DC24V
Power (W) at 20 °c	3.84

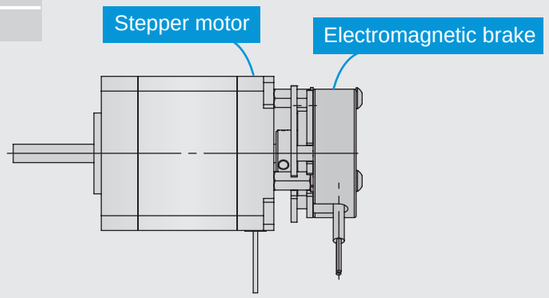

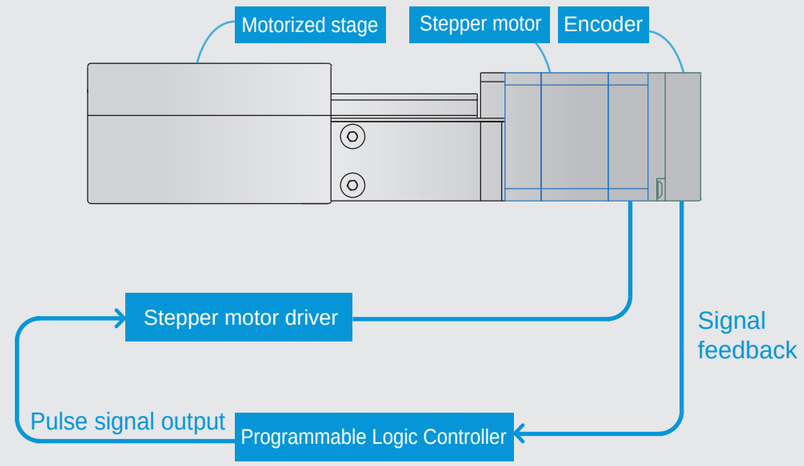

- High precision feedback: Optical encoder adopted for feedback, equipped with sub-division technology to have resolution up to 10,000 counts per revolution.
- Rigidity structure, minimum dimension: The smallest size in the market; common feedback type uses plug-in package with uniform size; compared to other brands, it is different in size, structure and function.
- Innovative closed-loop control: not limited by driver type, equipped with 2-phase, 3-phase and 5-phase stepper motors or other pulse type motor driver.
- Diversified configuration: equipped with I-Smart closed loop controller, without need to change program to be upgradeable to closed loop system, allowing flexibility in installation of feedback type package.

Specification introduction (for selection of feedback type stepper motor, please refer to GMT motor and driver catalog.)

Voltage		V	4.5~5.5
Current		mA	100(Max)
Signal			A+、A-、B+、B-、Z+、Z-
Frequency		Hz	300K
Output voltage	High	V	2.4(min)
	Low	V	0.4(max)
Maximum output current		mA	20
Maximum allowed rotation speed		rpm	600
Operation/storage temperature		°C	-20~+80
Operation			RH85%max
Humidity			non-collecting

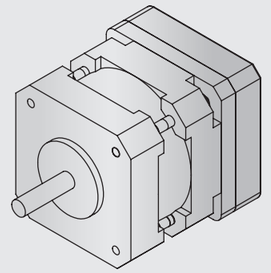

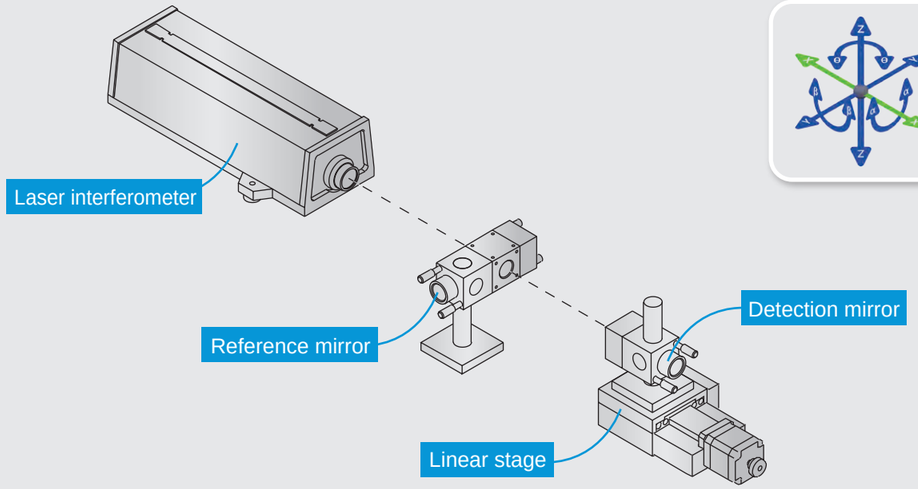

Testing equipment: laser interferometer, Zeiss coordinate measuring machine.
In testing, fix the stage bottom board and move the stage workbench.

Positioning precision (unit: μm)

Within predetermined testing range, from the starting position, move and position in a specific direction and measure the difference between actual value and target value. Use the maximum difference as positioning precision.

Repeatability positioning precision (unit: ±μm)

Use laser interferometer or Zeiss coordinate measuring machine (CMM) to repeat measurement for seven times. With half of the obtained maximum error from the error based on one direction to any point stop, measure in the middle point of movement distance and in the directions of two ends and obtain the maximum difference as the repeatability positioning precision.

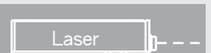

Missed step (lost stroke at reverse rotation) (unit: μm)

Within predetermined testing range, from the origin, make movement positioning for any point from positive direction command, measure actual movement value; make negative direction command (same pulse number) for movement positioning and measure actual movement value; make positive direction (same pulse number) command for movement positioning and measure actual movement value.
Make positive direction and negation direction movement seven times and measure the individual actual movement values. The average will be the missed step.

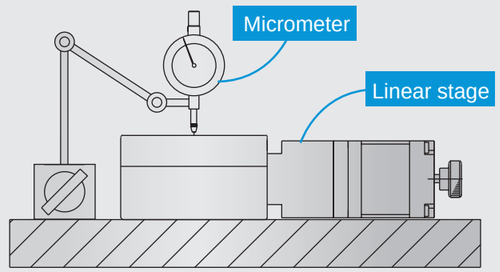

Testing equipment: micrometer.
In testing, fix stage and move meter.

Parallelism (unit: μm)

Put the stage on granite workbench. Use micrometer or Zeiss coordinate measuring machine (CMM) for measurement. At the middle of stage work area, use the measured maximum difference as the parallelism.

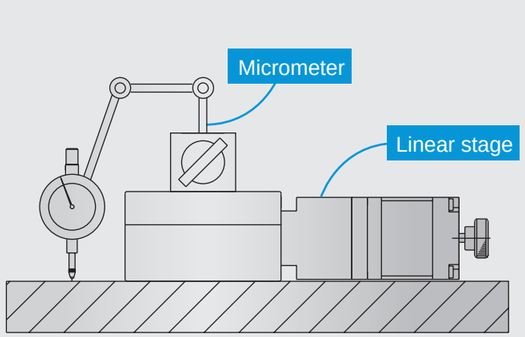

Testing equipment: micrometer.
In testing, fix stage and move stage workbench.

Dynamic parallelism (unit: μm)

Put the stage on granite workbench. Set micrometer on the workbench and measure on granite. The measured maximum difference is the Dynamic parallelism.

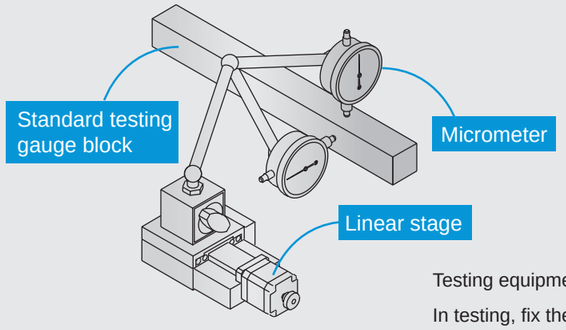

Testing equipment: micrometer.

In testing, fix the stage bottom board and move the stage workbench.

Dynamic straightness (unit: μm)

Within predetermined testing range, from the starting position of stage, move in a specific direction and use standard gauge block as basis to measure the difference between actual value and target value for horizontal straightness and vertical straightness. Use the maximum difference a Dynamic straightness.

GMT GLOBAL INC.

Testing Method

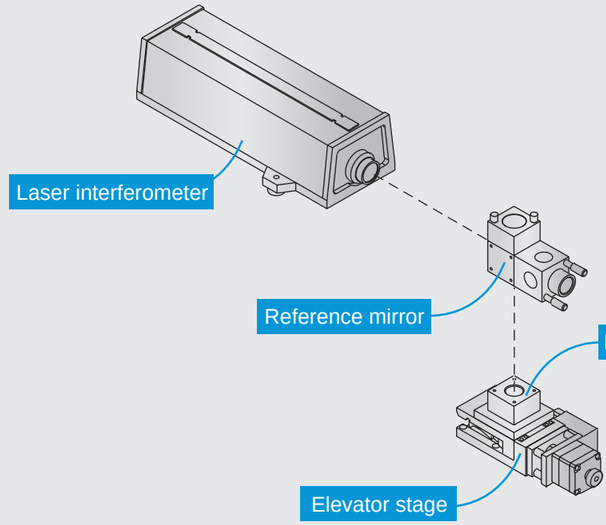

Testing equipment: laser interferometer, Zeiss coordinate measuring machine.

In testing, fix the stage bottom board and move the stage workbench.

One-way remove positioning precision (unit: μm)

Within predetermined testing range, from the starting position, move and position in a specific direction and measure the difference between actual value and target value. Use the maximum difference as positioning precision.

Repeated remove positioning precision (unit: μm)

Use laser interferometer or Zeiss coordinate measuring machine (CMM) to repeat measurement for seven times. With half of the obtained maximum error from the error based on one direction to any point stop, measure in the middle point of movement distance and in the directions of two ends and obtain the maximum difference as the repeated positioning precision.

Missed step (lost stroke at reverse rotation) (unit: μm)

Within predetermined testing range, from the origin, make movement positioning for any point from positive direction command, measure actual movement value; make negative direction command (same pulse number) for movement positioning and measure actual movement value; make positive direction (same pulse number) command for movement positioning and measure actual movement value.
Make positive direction and negation direction movement seven times and measure the individual actual movement values. The average will be the missed step.

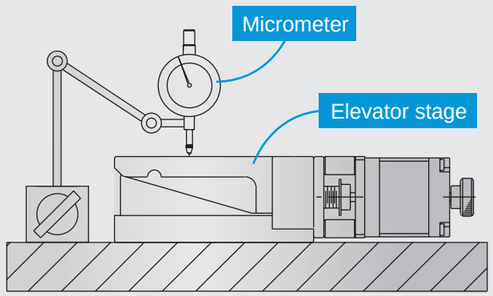

Testing equipment: micrometer.

In testing, fix stage and move meter.

Parallelism (unit: μm)

Put the stage on granite workbench. Use micrometer or Zeiss coordinate measuring machine (CMM) for measurement. At the middle of stage work area, use the measured maximum difference as the parallelism.

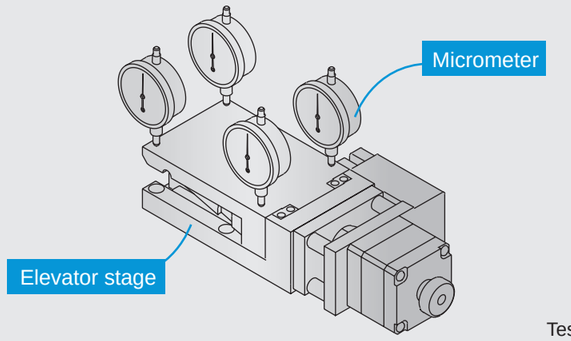

Testing equipment: micrometer.

In testing, fix the stage bottom board and move the stage workbench.

Dynamic parallelism (unit: μm)

Within predetermined testing range, from a stage starting position, move in a specific direction and measure the difference between actual value and target value. Use the maximum difference as Dynamic parallelism.

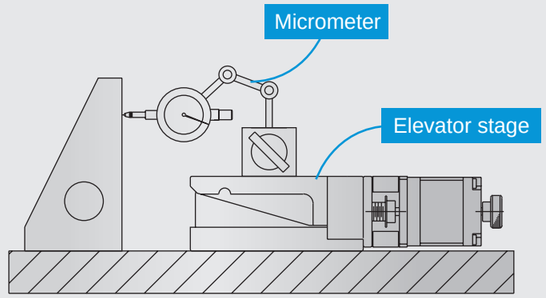

Testing equipment: micrometer.

In testing, fix stage and move stage workbench.

Dynamic vertical (unit: μm)

Put the stage on granite workbench. Set micrometer on the workbench and measure on the standard gauge block. The measured maximum difference is the Dynamic vertical.

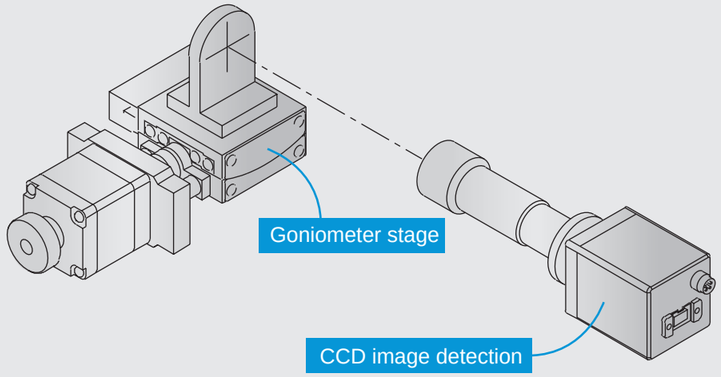

Testing equipment: CCD image detection system, Zeiss coordinate measuring machine.

In testing, fix the stage bottom board and move the stage workbench.

Positioning precision (unit: °)

Within predetermined testing range, from the starting position, move and position in a specific direction and measure the difference between actual value and target value. Use the maximum difference as positioning precision.

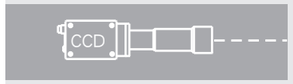

Repeated remove positioning precision (unit: ±°)

According to baseline, set testing standard angle for movement. In clockwise (counterclockwise) direction, fix the angle for positioning and repeat seven measurements. In the same direction, use the half of the maximum difference from any stop point as Repeatability positioning precision value.

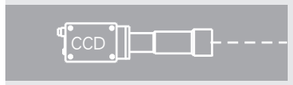

Missed step (lost stroke at reverse rotation) (unit: °)

Select clockwise rotation for angle positioning and set the position x1. Continue counterclockwise rotation for angle positioning and set the position y1. Set arbitrary position for seven measurements. Measure in the middle of movement distance and in the direction of two ends. The obtained maximum is the missed step.

Missed step calculation:

$$\max \left| \frac{(x1+x2+x3\ldots\ldots+x7)}{7} - \frac{(y1+y2+y3\ldots\ldots+y7)}{7} \right|$$

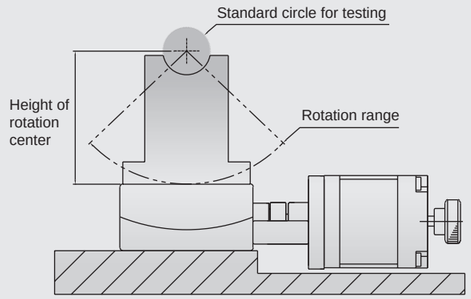

Testing equipment: altimeter, Zeiss coordinate measuring machine.

In testing, fix stage and move meter.

Height of rotation center (unit: mm)

Within predetermined testing range, from a starting position, move in a specific direction and measure and check if the distance from bench to circle center falls within target value, which is the height of rotation center.

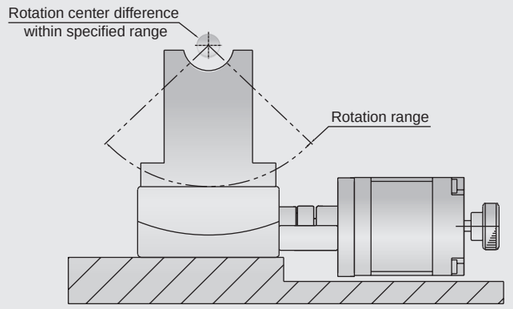

Testing equipment: altimeter, Zeiss coordinate measuring machine.

In testing, fix the stage bottom board and move the stage workbench.

Rotation center deflection precision (unit: mm)

Within predetermined testing range, from a starting position, move in a specific direction and measure and check if the actual circle center falls within target value, which is the rotation center deflection precision.

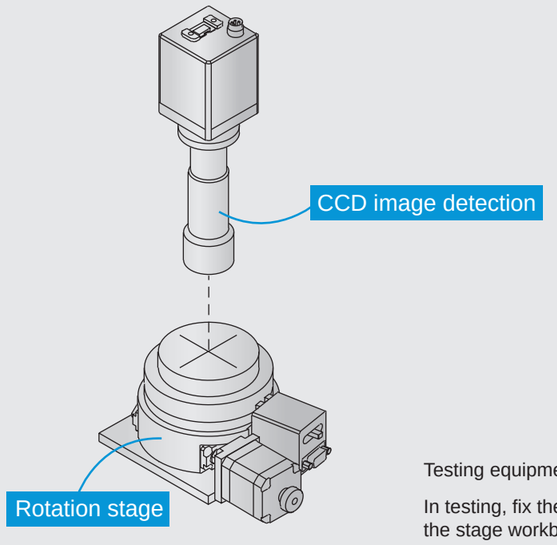

Testing equipment: CCD image detection system.

In testing, fix the stage bottom board and move the stage workbench.

One-way remove positioning precision (unit: °)

According to baseline, set standard angle position for movement plane and fix and position rotation angle in clockwise (counterclockwise) direction. Measure the difference between actual value and target value in 360° rotation. The obtained maximum is the positioning precision.

Repeatability positioning precision (unit: ±°)

Use any angle in clockwise (counterclockwise) direction as standard, measure deviation for stop angle for seven times. With half of the obtained maximum error, in the middle of movement distance and the direction of two ends, obtain the maximum value as the Repeatability positioning precision.

Missed step (lost stroke at reverse rotation) (unit: °)

Select clockwise rotation for angle positioning and set the position x1. Continue counterclockwise rotation for angle positioning and set the position y1. Set arbitrary position for seven measurements. Measure in the middle of movement distance and in the direction of two ends. The obtained maximum is the missed step.

Missed step calculation:

$$\max \left| \frac{(x1+x2+x3\ldots\ldots+x7)}{7} - \frac{(y1+y2+y3\ldots\ldots+y7)}{7} \right|$$

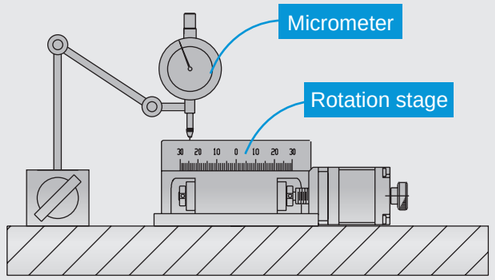

Testing equipment: micrometer.

In testing, fix stage and move meter.

Parallelism (unit: μm)

Put the stage on granite workbench. Use micrometer or Zeiss coordinate measuring machine for measurement. At the middle of stage work area, use the measured maximum difference as the parallelism.

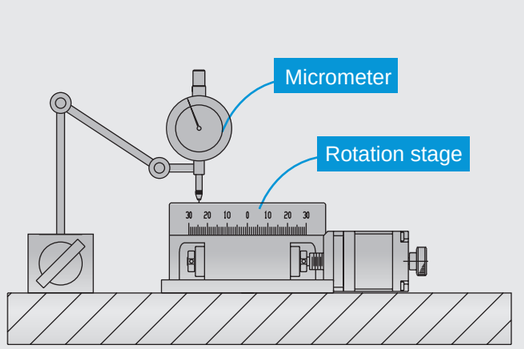

Testing equipment: micrometer.

In testing, fix stage and move stage workbench.

Dynamic parallelism (unit: μm)

Put the stage on granite workbench. Use micrometer on the stage workbench or Zeiss coordinate measuring machine for measurement. As the stage workbench makes one rotation, use the maximum measurement difference as the Dynamic parallelism.

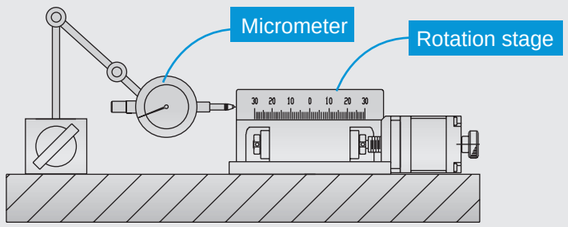

Testing equipment: micrometer.

In testing, fix the stage bottom board and move the stage workbench.

Dynamic concentricity (unit: °)

Within predetermined testing range, from a starting position in the circumference, move in a specific direction and measure the maximum difference between actual value and target value as Dynamic concentricity.

GMT GLOBAL INC.