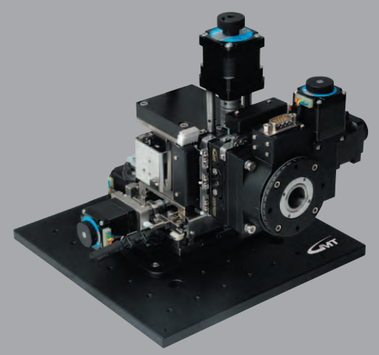

Standard Motorized Positioning Stage

GMT GLOBAL INC.

LASER AND

302-2725 Rue Notre Dame
Montreal, QC, H8S 2H3
CANADA
+1 (514) 452-4693
sales@laserand.com

www.laserand.com

2014.05.20

AC Design 04-27071159

5

STANDARD MOTORIZED POSITIONING STAGE 2014

GMT GLOBAL INC.

X axis (XY axis)

AX□-A2N	AX□-F2N	CXS□-S2N	CXN(C)□-S2N
Material	Material		
Aluminum alloy	Stainless steel		
Guiding-Crossed-roller	Guiding-Linear ball		
	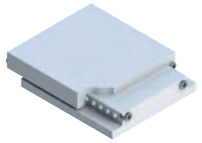		
V grooved rail	Gothic rail		
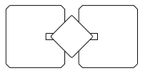	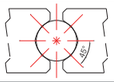		
Drive type-Ball screw	Drive type-Ball screw		
Table size(mm)	Table size(mm)	Table size(mm)	Table size(mm)
□40 □60 □80 □100 □120	□40 □60 □80	□50 □60 □80	□50 □60 □80
Travel stroke(mm)	Travel stroke(mm)	Travel stroke(mm)	Travel stroke(mm)
15 20 30 40 70	15	20 30 20 30 50 20 30 50	30 50 75 100 150 200 30 50 75 100 150 200 250 300
Load capacity(Kgf)	Load capacity(Kgf)	Load capacity(Kgf)	Load capacity(Kgf)
6 21 23 25	10 12 14	6 7 8	10 14 16
Repeatability accuracy			
±1 μm			
Page	Page	Page	Page
C1~C4	C9~C12	C17~C22	C29~C52
Electrical Specification Page	Electrical Specification Page	Electrical Specification Page	Electrical Specification Page
D1~D2	D3	D4	D5

Z axis	α axis	θ axis
AZV□-F	AXG□-CSW	AR□-A3N
Material	Material	Material
Stainless steel	Brass alloy	Aluminum alloy
Guiding-Linear ball	Guiding-Dovetail type	Guiding-Ball bearing
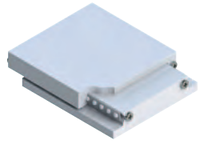	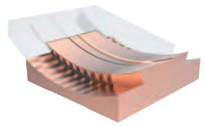	
Gothic rail	Dovetail	Ball bearing
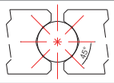		
Drive type-Ball screw	Drive type-Warm & warm gear	Drive type-Warm & warm gear
	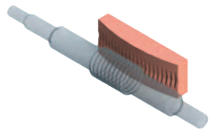	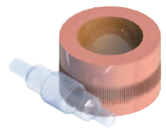
Table size(mm)	Table size(mm)	Table size(mm)
□40 □60 □80	□60-35 □60-60 □60-80	ø39 ø59 ø80 ø100
Travel stroke(mm)	Travel stroke(mm)	Travel stroke(mm)
6 8 10	±12° ±10° ±7°	360°
Load capacity(Kgf)	Load capacity(Kgf)	Load capacity(Kgf)
3 5	6	4 20
Repeatability accuracy	Repeatability accuracy	
±5 μm	±0.05°	
Page	Page	Page
C65~C68	C69~C72	C73~C76
Electrical Specification Page	Electrical Specification Page	Electrical Specification Page
D6~D7	D8	D9

X axis (XY axis) - V-teeth Leed screw Design

AX□-A1V	AX□-F1V	CXS□-S1V	CXN(C)□-S1V
Material	Material		
Aluminum alloy	Stainless steel		
Guiding-Crossed-roller	Guiding-Linear ball		
	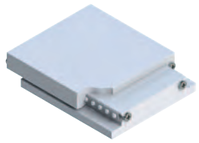		
V grooved rail	Gothic rail		
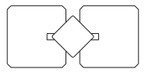	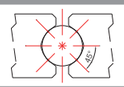		
Drive type-V-teeth lead screw			
Table size(mm)	Table size(mm)	Table size(mm)	Table size(mm)
□40 □60 □80 □100 □120	□40 □60 □80	□50 □60 □80	□50 □60 □80
Travel stroke(mm)	Travel stroke(mm)	Travel stroke(mm)	Travel stroke(mm)
15 20 30 40 70	15	20 30 20 30 50 20 30 50	50 75 100 50 75 100 50 75 100
Load capacity(Kgf)	Load capacity(Kgf)	Load capacity(Kgf)	Load capacity(Kgf)
6 21 23 25	10 12 14	6 7 8	10 14 16
Repeatability accuracy			
±2 μm			
Page	Page	Page	Page
C77~C80	C85~C88	C93~C98	C105~C116
Electrical Specification Page	Electrical Specification Page	Electrical Specification Page	Electrical Specification Page
D10	D11	D12	D13

This product is precision products. There are precautions in specifications or other aspects. To use the product correctly, please be familiar with the precautions in advance.

Unpacking Precautions

Before unpacking, check the appearance for damage, loose screws and loose components. If there are concerns about structure and appearance, please take photos as evidence and E-mail them to the responsible business unit.

When the shipment arrives, make sure that the specifications and contents are consistent with the order, and check whether any peripheral parts are missing.

For any questions, please contact the original business unit.

Safety Precautions

Before placement and use, make sure that there is sufficient working space around to prevent the danger of falling and rolling.
CAUTION: Violation may result in personal injury or product damage.

For installation and operation, please follow electrical safety instructions. Do not use in explosive atmosphere, flammable environment, corrosive environment, easily wet and humid environment or near flammable materials. Otherwise, there is risk of fire, electric shock and injury.
CAUTION: Violation may result in serious personal injury or product damage.

In operation, please check if there is enough movement space around the motor and mechanism to prevent any part of the body and clothing accessories from entering the stage or coming close to the working range of stage or any danger of rolling, pinching or pulling.
CAUTION: Violation may result in personal injury or product damage.

Turn off the power before maintenance to prevent danger of electric shock.
CAUTION: Violation may result in serious personal injury or product damage.

When the product is used in the vertical direction of Z axis, please use safety device for prevention (natural slide or power interruption due to overload).
CAUTION: Violation may result in personal injury or product damage.

Installation Precautions

Installation Precautions

When abnormal issue (such as abnormal sound, abnormal vibration) arises, please immediately stop the machine.
→ CAUTION: Violation may result in personal injury or product damage.

Do not forcibly pull or bend any electric wires and follow the wiring diagram for correct wiring.
→ CAUTION: Violation may result in personal injury or product damage.

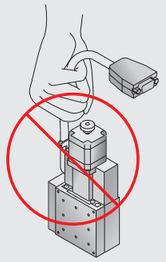

When tightening screws, please torque wrench according to the specifications of screws.
→ CAUTION: Violation may cause loosening.

Please do not allow mechanical setting over maximum speed to cause mechanical instability (avoiding extreme change of setting or parameters).
→ CAUTION: Violation may result in personal injury or product damage.

When malfunction or damage arises, please do not continue the use.
→ CAUTION: Violation may result in personal injury or product damage.

Make sure wiring and connection of electric equipment is secured. Make sure parameter setting is correct.
→ CAUTION: Violation may cause fire, electric shock, personal injury or product damage.

Environment Precaution

Foreign object such as dust, metal powder entering screw or slide rail may reduce life and cause excess wear.
→ If concerns exist, please implement dust prevention measures.

If the product is used as mechanical processing standard, it may affect life, performance and precision.
→ If the situation exists, please have installation on the base with reliable rigidity.

The product is designed and planned according to the direction specified in the catalog. Please check with GMT if other direction is used.
→ If the direction is other than horizontal direction, it will reduce life and increase probability of malfunction.

Before installation of our product, please make sure that the installation surface has no unnecessary object, and use alcohol to clean and prevent loss of installation precision.
→ Violation may cause the product installation precision unable to meet the catalog specification.

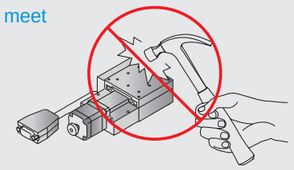

Do not apply inappropriate force and strike to the product to prevent damage and loss of precision and warranty.
→ Violation may cause product damage or precision unable to meet catalog specification.

Installation Precaution

Please do not turn off travel stroke limitation sensor during use to deactivate the sensor.
When turning the knob in the back of motor, please do not overuse the travel stroke.
→ Violation may result in personal injury or product damage.

During installation of peripheral mechanism on product upper board/ lower board, please keep the stage in horizontal position with fixation. (Make sure the platform installation flatness is within 0.01mm and the stage installation inclination angle is below 1° to prevent poor precision due to stage deformation.)
→ Violation may result in personal injury or product damage.

Do not remove any parts of the precision motorized stage arbitrarily to prevent loss of precision and warranty. If service is needed, please contact salesperson.
→ Violation may cause product damage or precision unable to meet catalog specification.

If screw hole does not fit or additional screw hole is needed, please contact salesperson; do not handle it by yourself to prevent loss of precision and warranty.
→ Violation may cause product damage or precision unable to meet catalog specification.

Accessories and parts of the product are not water-proof or dust-proof; please do not use the product directly in oil misty, dusty or humid environment.
→ Violation may cause product damage or precision unable to meet catalog specification.

Installation procedures:

1. Make sure that installation surface does not have any flash, dust or dent.
2. Please put the product on the installation surface.
3. Please adjust according to installation hole position (aiming screw hole).
4. It is suggested to use the screws in compliance with standard specifications.
5. Use torque wrench to tighten screw.

Precautions for product use environment:

Shipping temperaturet	-10℃ ~ 70℃
Shipping humidity	below 90%RH (non-condensing)
Installation temperature	0℃ ~ 40℃
Installation humidity	below 20% ~ 80%RH (non-condensing)
Environment gas	indoor (not contain corrosive gas, flammable gas, oil mist and dust)

System Configuration Diagram

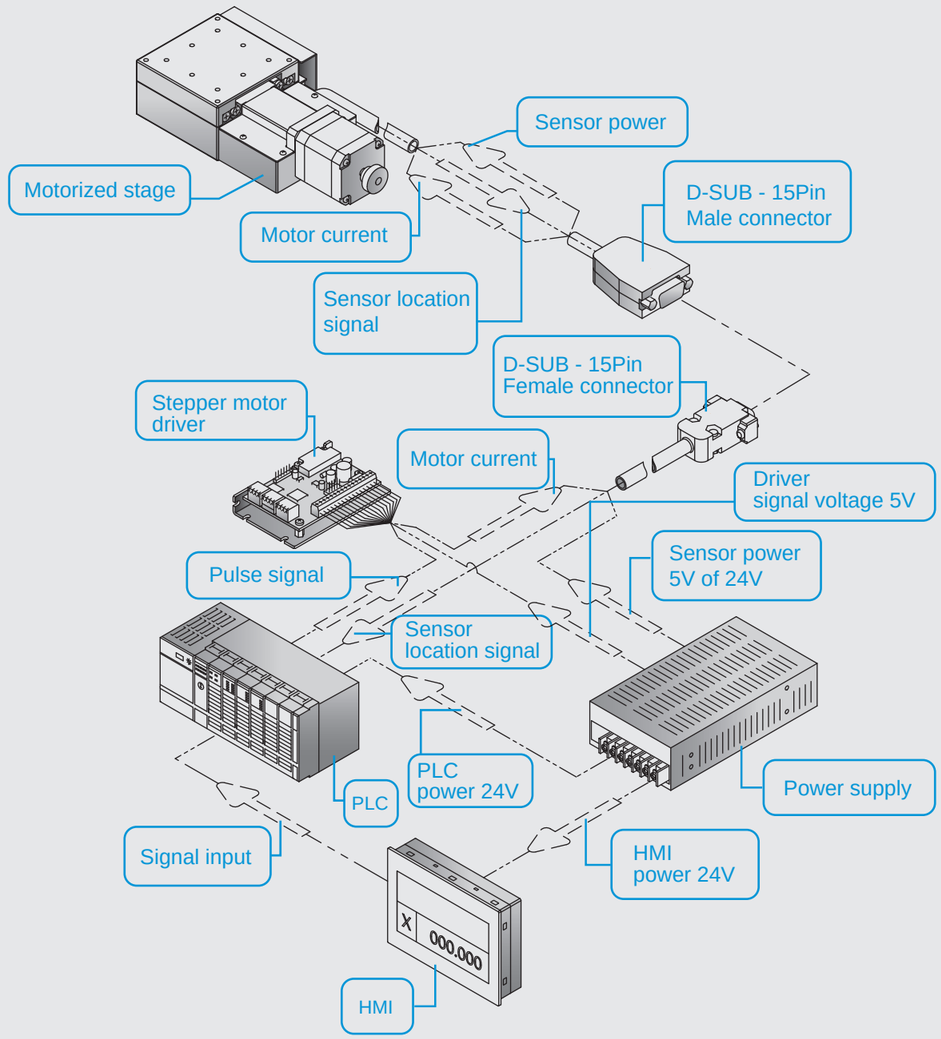

- For detailed specifications, please read the description for the stage and connecting cable on page E1 ~ E2.
- For selection of driver, please refer to the cross-reference table on page E3 for the motor/driver of the precision motorized stage or the GMT motor and driver catalog.
- The most preferred driver is recommended to be specified by GMT as considerations. For different needs, please choose the suitable driver based on real functional needs.

Warranty Instructions

- Within warranty period, if any of the following failures occurs, our company will be responsible for the repair.
- Warranty period is one year, starting from the time the product is delivered to the designated place.
- If anything below occurs, it will not be covered under warranty:

1. Failure that occurs when the product is not used in specified environment and method.
2. Failure that occurs when the product is modified or repaired without authorization.
3. Failure that occurs due to natural disaster or misuse.
4. Fault or damage after customer purchase due to fall or impact during shipping or movement.
5. Malfunction or damage due to connection to other machine.
6. Violation to the above instructions and precautions on the manual will cause malfunction or damage.

Trouble Shooting Suggestions

- After the motor or mechanism is hit by external force, please check whether screw function affects stage.
- Please do not arbitrarily adjust left and right limit position and origin position to prevent machine collision and loss of warranty.
- Limit switch must have secured wires and receptacles and be prevented from loosening.
- Do not arbitrarily loosen coupling and transmission structure to assure precision and warranty.
- When unusual noise or vibration occurs in the operation of machine, please turn off power before inspection.
- For Q&A regarding stage, please check GMT website.

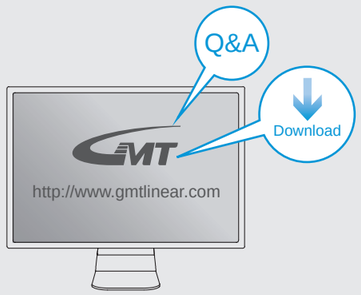

AX-A series

Model description

Material	
A	Aluminum alloy

Drive type	
2	Ball screw

Accuracy level	
N	Standard grade

Wiring method	
R	Right wiring
L	Left wiring

Motor model	
N	2-phase stepper
X	Not equipped

Connector type	
D	D-SUB15 (VGA)

AX 40 - A 2 N R - N D - 2 C

Axis & serial numbers	
AX	X axis

Table size	
40	40*40mm
60	60*60mm
80	80*80mm
100	100*100mm
120	120*120mm

Connecting cable (optional)	
Blank	Not equipped
2	2m cable*1
4	4m cable*1

*1 (D-SUB 15 pin female connector + the other side with discrete wirings)

Driver (optional)	
Blank	Not equipped
C	Standard specified by GMT

Model description			AX40-A2NR-ND	AX60-A2NR-ND	AX80-A2NR-ND	AX100-A2NR-ND	AX120-A2NR-ND
			AX40-A2NL-ND	AX60-A2NL-ND	AX80-A2NL-ND	AX100-A2NL-ND	AX120-A2NL-ND
Mechanical specifications	Table size		40X40 mm	60X60 mm	80X80 mm	100X100 mm	120X120 mm
	Travel stroke		15 mm	20 mm	30 mm	40 mm	70 mm
	Drive type		Ball screw Ø6 lead 1mm		Ball screw Ø8 lead 1mm		
	Rail		Crossed-roller guiding				
	Stage material/Surface treatment		Aluminum alloy / Black anodized				
	Main unit weight		0.37 Kg	0.64 Kg	1.2 Kg	1.65 Kg	2.6 Kg
	Coupling		FAMMS12-3*5	FAMS16-5*5	FAMMS16-5*5		
	Accuracy level		N：Standard grade				
	Wiring method		R：Right wiring (Inventory specification) / L：Left wiring				
Precision specifications	Resolution (pulse)	Full / Half	5 μm / 2.5 μm				
	Maximum speed (full step)		10 mm / sec				
	Positioning precision		15 μm				
	Repeatability precision		±1 μm				
	Load capacity		6 Kgf		21 Kgf	23 Kgf	25 Kgf
	Missed step		2 μm				
	Parallelism		30 μm				
	Dynamic straightness		3 μm				
	Dynamic parallelism		6.6 μm			10 μm	
Electrical specifications	Motor	Type/Shaft numbers	2-phase stepper / □28 double shafts		2-phase stepper / □42 double shafts		
		Brand/ Model	GMT / 2MS-N28D32A		GMT / 2MS-N42D47A		
	Driver brand/Model		GMT/GTR22G-D (Additional options)				
	Connector	Stage side connector	15-pin male end connector D-SUB				
		Controller side connector	15-pin female end connector D-SUB (optional)				
	Sensor	Origin sensor	Photoelectric sensor EE-SX498				
		Limit sensor					
		Power voltage	24V±10%				
		Control output	NPN open collector output under 24V 8mA				
		Output control	Testing (sensing): output transistor OFF (closed)				

X axis

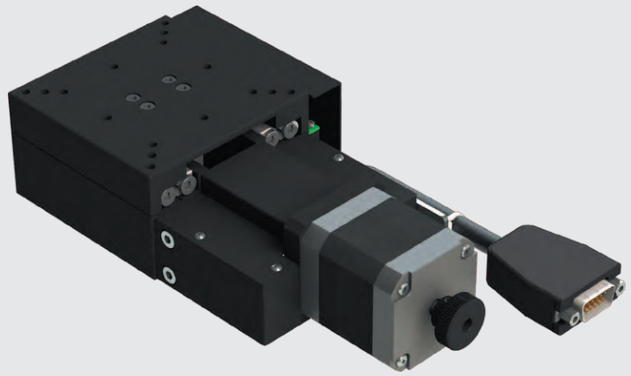

AX40-A2NR-ND

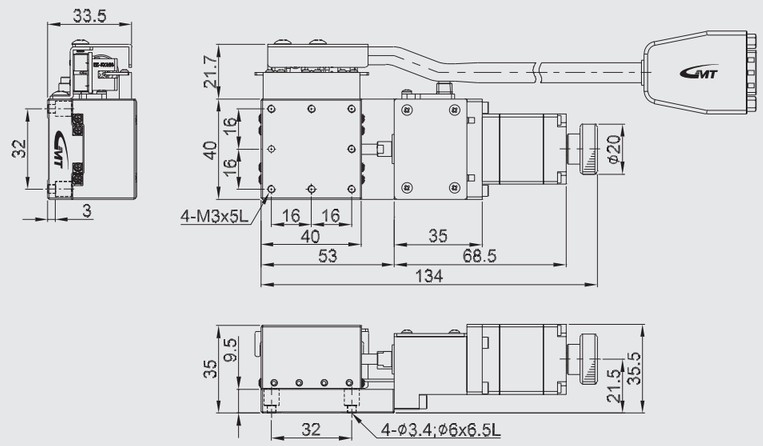

◎ Photo is AX80-A2NR-ND。

AX60-A2NR-ND

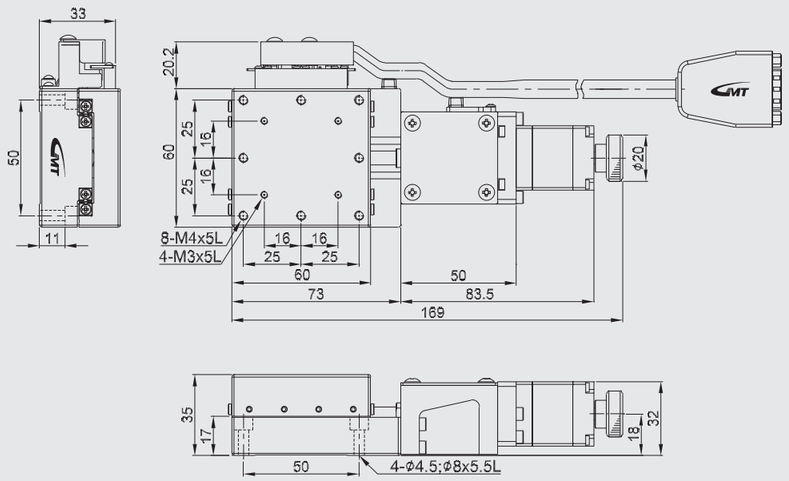

AX80-A2NR-ND

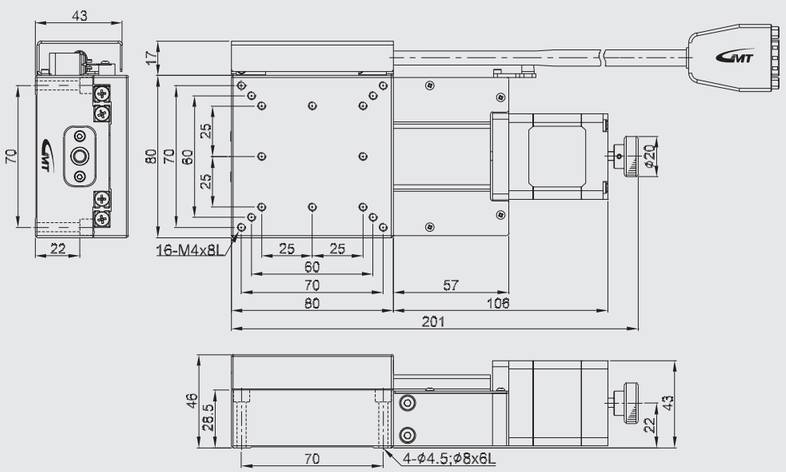

AX100-A2NR-ND

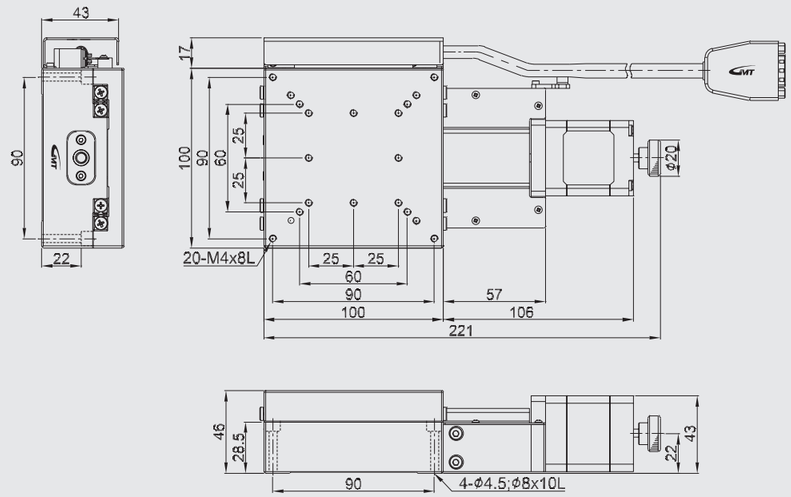

AX120-A2NR-ND

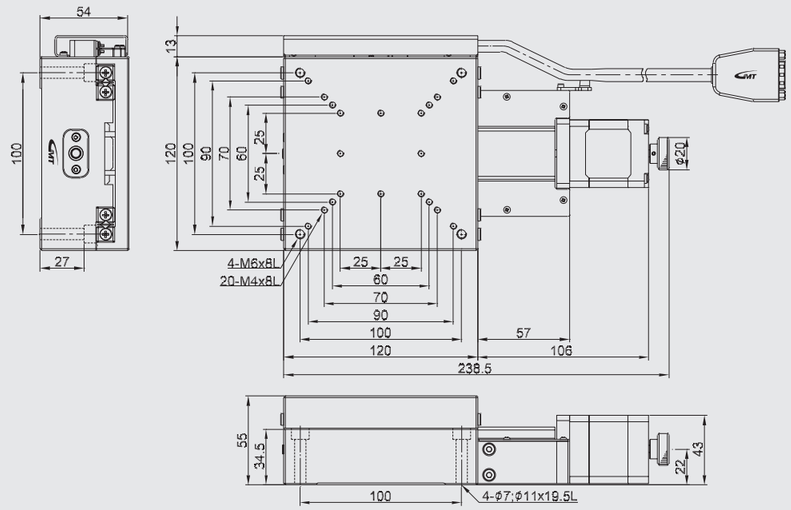

AY-A series

Model description

Material	
A	Aluminum alloy

Drive type	
2	Ball screw

Accuracy level	
N	Standard grade

Wiring method	
R	Right wiring
L	Left wiring

Motor model	
N	2-phase stepper
X	Not equipped

Connector type	
D	D-SUB15 (VGA)

AY 40 - A 2 N R - N D - 2 C

Axis & serial numbers	
AY	XY axis

Table size	
40	40*40mm
60	60*60mm
80	80*80mm
100	100*100mm
120	120*120mm

Connecting cable (optional)	
Blank	Not equipped
2	2m cable*1
4	4m cable*1

*1 (D-SUB 15 pin female connector + the other side with discrete wirings)

Driver (optional)	
Blank	Not equipped
C	Standard specified by GMT

Model description			AY40-A2NR-ND	AY60-A2NR-ND	AY80-A2NR-ND	AY100-A2NR-ND	AY120-A2NR-ND
			AY40-A2NL-ND	AY60-A2NL-ND	AY80-A2NL-ND	AY100-A2NL-ND	AY120-A2NL-ND
Mechanical specifications	Table size		40X40 mm	60X60 mm	80X80 mm	100X100 mm	120X120 mm
	Travel stroke		15 mm	20 mm	30 mm	40 mm	70 mm
	Drive type		Ball screw Ø6 lead 1mm		Ball screw Ø8 lead 1mm		
	Rail		Crossed-roller guiding				
	Stage material/Surface treatment		Aluminum alloy / Black anodized				
	Main unit weight		0.76 Kg	1.38 Kg	2.42 Kg	3.3 Kg	5.24 Kg
	Coupling		FAMMS12-3*5	FAMS16-5*5	FAMMS16-5*5		
	Accuracy level		N：Standard grade				
	Wiring method		R：Right wiring (Inventory specification) / L：Left wiring				
Precision specifications	Resolution (pulse)	Full / Half	5 μm / 2.5 μm				
	Maximum speed (full step)		10 mm / sec				
	Positioning precision		15 μm				
	Repeatability precision		±1 μm				
	Load capacity		5.0 Kgf		19 Kgf	21 Kgf	22 Kgf
	Missed step		2 μm				
	Parallelism		30 μm				
	Dynamic straightness		3 μm				
	Dynamic parallelism		6.6 μm			10 μm	
Electrical specifications	Motor	Type/Shaft numbers	2-phase stepper / ☐28 double shafts		2-phase stepper / ☐42 double shafts		
		Brand/ Model	GMT / 2MS-N28D32A		GMT / 2MS-N42D47A		
	Driver brand/Model		GMT/GTR22G-D (Additional options)				
	Connector	Stage side connector	15-pin male end connector D-SUB				
		Controller side connector	15-pin female end connector D-SUB (optional)				
	Sensor	Origin sensor	Photoelectric sensor EE-SX498				
		Limit sensor					
		Power voltage	24V±10%				
		Control output	NPN open collector output under 24V 8mA				
		Output control	Testing (sensing): output transistor OFF (closed)				

XY axis

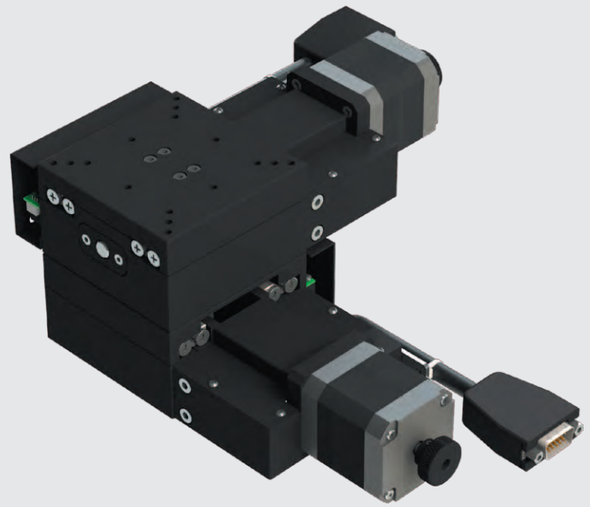

AY40-A2NR-CD

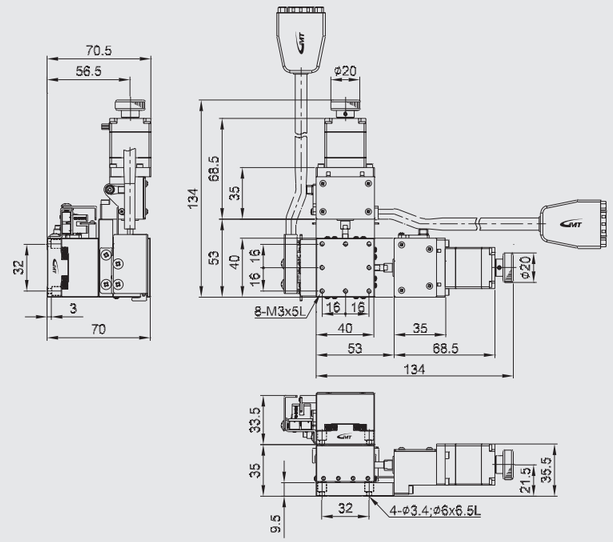

◎ Photo is AY80-A2NR-CD。

AY60-A2NR-CD

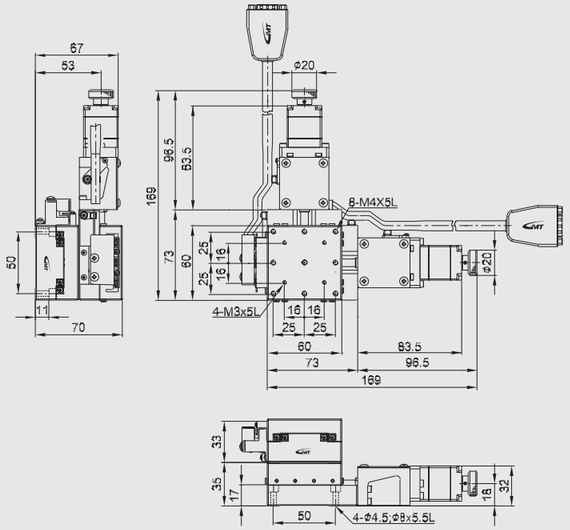

AY80-A2NR-CD

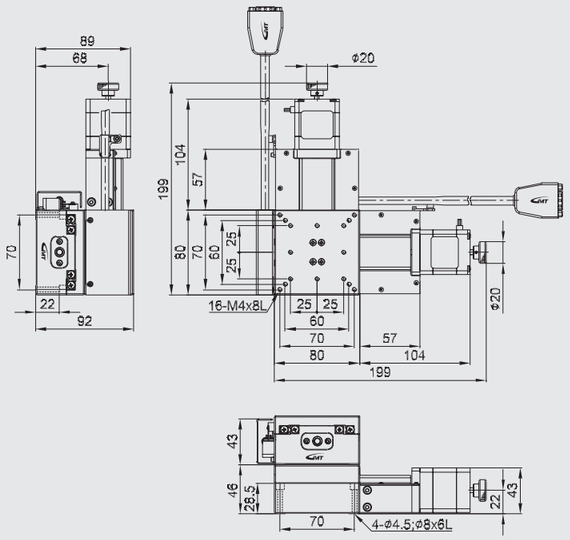

AY100-A2NR-CD

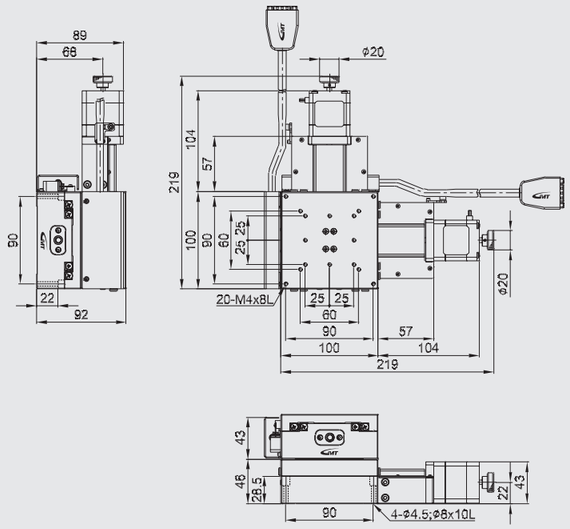

AY120-A2NR-CD

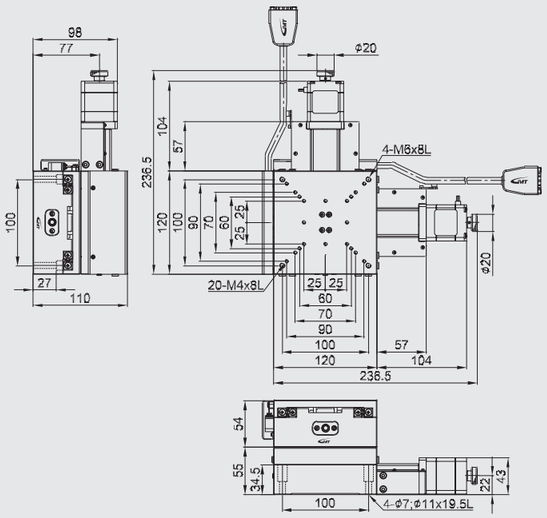

AX-F series

Model description

Material	
A	Steel

Drive type	
2	Ball screw

Accuracy level	
N	Standard grade

Wiring method	
R	Right wiring
L	Left wiring

Motor model	
N	2-phase stepper
X	Not equipped

Connector type	
D	D-SUB15 (VGA)

AX 40 - F 2 N R - N D - 2 C

Axis & serial numbers	
AX	X axis

Table size	
40	40*40mm
60	60*60mm
80	80*80mm

Connecting cable (optional)	
Blank	Not equipped
2	2m cable*1
4	4m cable*1

*1 (D-SUB 15 pin female connector + the other side with discrete wirings)

Driver (optional)	
Blank	Not equipped
C	Standard specified by GMT

Model description			AX40-F2NR-ND	AX60-F2NR-ND	AX80-F2NR-ND
			AX40-F2NL-ND	AX60-F2NL-ND	AX80-F2NL-ND
Mechanical specifications	Table size		40X40 mm	60X60 mm	80X80 mm
	Travel stroke			15 mm	
	Drive type		Ball screw Ø6 lead 1mm		
	Rail		Linear ball guiding		
	Stage material/Surface treatment		Steel / Nickel plating		
	Main unit weight		0.4 Kg	0.7 Kg	1.0 Kg
	Coupling		FAMC13-5*5		
	Accuracy level		N：Standard grade		
	Wiring method		R：Right wiring (Inventory specification) / L：Left wiring		
Precision specifications	Resolution (pulse)	Full / Half	5 μm / 2.5 μm		
	Maximum speed (full step)		12 mm / sec		
	Positioning precision		15 μm		
	Repeatability precision		±1 μm		
	Load capacity		10 Kgf	12 Kgf	14 Kgf
	Missed step		3 μm		
	Parallelism		20 μm		
	Dynamic straightness		3 μm		
	Dynamic parallelism		10 μm		
Electrical specifications	Motor	Type/Shaft numbers	2-phase stepper / □28 double shafts		
		Brand/ Model	GMT / 2MS-N28D32A		
	Driver brand/Model		GMT/GTR22G-D (Additional options)		
	Connector	Stage side connector	15-pin male end connector D-SUB		
		Controller side connector	15-pin female end connector D-SUB (optional)		
	Sensor	Origin sensor	Photoelectric sensor EE-SX498		
		Limit sensor			
		Power voltage	24V±10%		
		Control output	NPN open collector output under 24V 8mA		
		Output control	Testing (sensing): output transistor OFF (closed)		

X axis

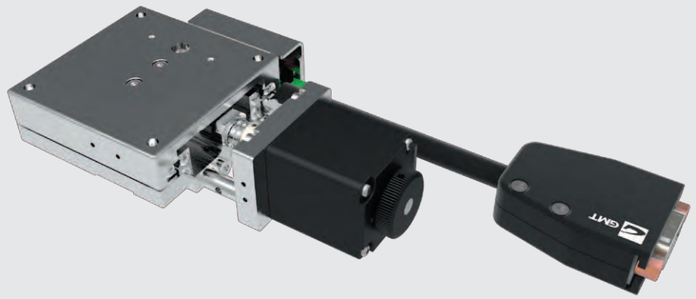

AX40-F2NR-ND

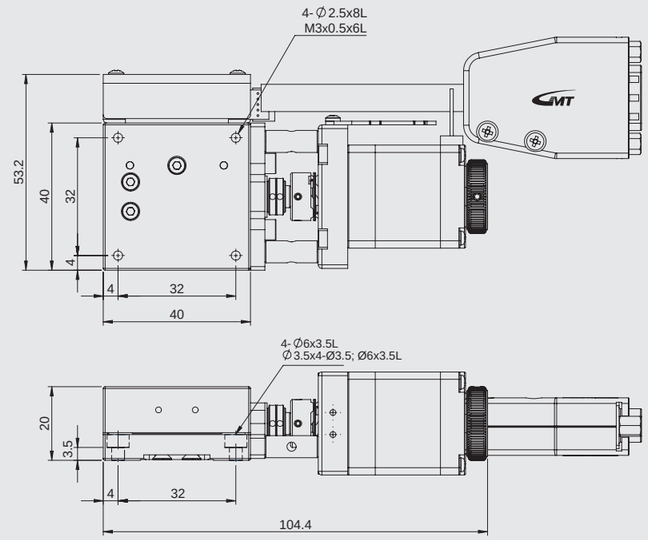

◎ Photo is AX60-F2NR-ND。

AX60-F2NR-ND

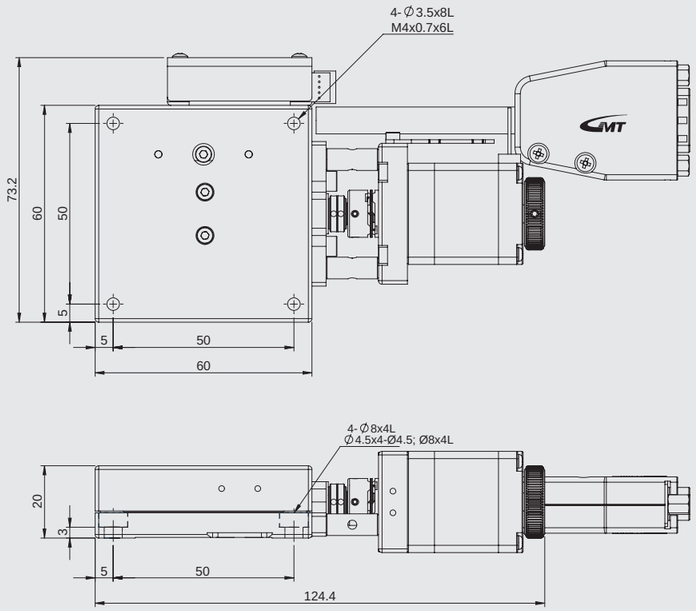

AX80-F2NR-ND

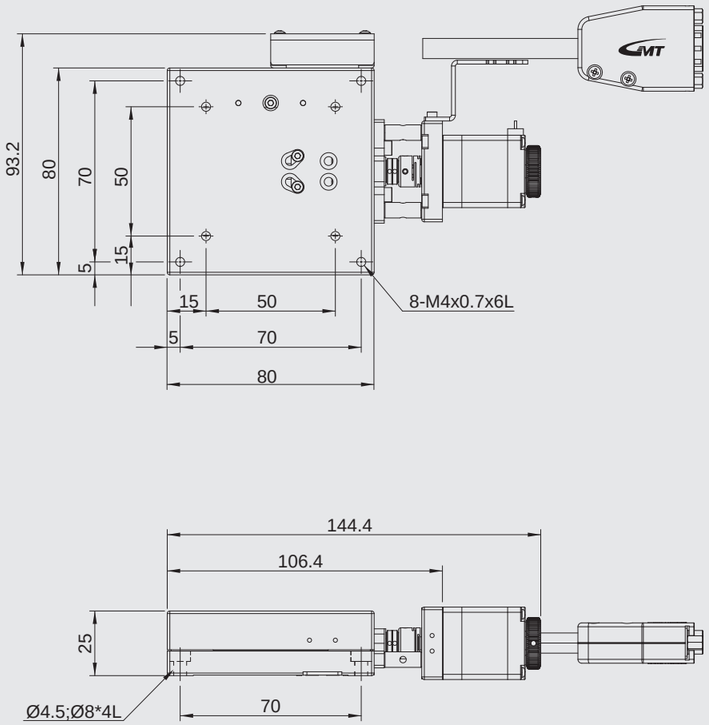

AY-F series

Model description

Material		Drive type		Accuracy level		Wiring method		Motor model		Connector type	
A	Steel	2	Ball screw	N	Standard grade	R	Right wiring	N	2-phase stepper	D	D-SUB15 (VGA)
						L	Left wiring	X	Not equipped		

AY 40 - F 2 N R - N D - 2 C

Axis & serial numbers	
AY	XY axis

Table size	
40	40*40mm
60	60*60mm
80	80*80mm

Connecting cable (optional)	
Blank	Not equipped
2	2m cable*1
4	4m cable*1

*1 (D-SUB 15 pin female connector + the other side with discrete wirings)

Driver (optional)	
Blank	Not equipped
C	Standard specified by GMT

Model description			AY40-F2NR-ND	AY60-F2NR-ND	AY80-F2NR-ND
			AY40-F2NL-ND	AY60-F2NL-ND	AY80-F2NL-ND
Mechanical specifications	Table size		40X40 mm	60X60 mm	80X80 mm
	Travel stroke			15 mm	
	Drive type		Ball screw Ø6 lead 1mm		
	Rail		Linear ball guiding		
	Stage material/Surface treatment		Steel / Nickel plating		
	Main unit weight		0.8 Kg	1.4 Kg	2.0 Kg
	Coupling		FAMC13-5*5		
	Accuracy level		N：Standard grade		
	Wiring method		R：Right wiring (Inventory specification) / L：Left wiring		
Precision specifications	Resolution (pulse)	Full / Half	5 μm / 2.5 μm		
	Maximum speed (full step)		12 mm / sec		
	Positioning precision		15 μm		
	Repeatability precision		±1 μm		
	Load capacity		9 Kgf	11 Kgf	13 Kgf
	Missed step		3 μm		
	Parallelism		20 μm		
	Dynamic straightness		3 μm		
	Dynamic parallelism		10 μm		
Electrical specifications	Motor	Type/Shaft numbers	2-phase stepper / □28 double shafts		
		Brand/ Model	GMT / 2MS-N28D32A		
	Driver brand/Model		GMT/GTR22G-D (Additional options)		
	Connector	Stage side connector	15-pin male end connector D-SUB		
		Controller side connector	15-pin female end connector D-SUB (optional)		
	Sensor	Origin sensor	Photoelectric sensor EE-SX498		
		Limit sensor			
		Power voltage	24V±10%		
		Control output	NPN open collector output under 24V 8mA		
		Output control	Testing (sensing): output transistor OFF (closed)		

XY axis

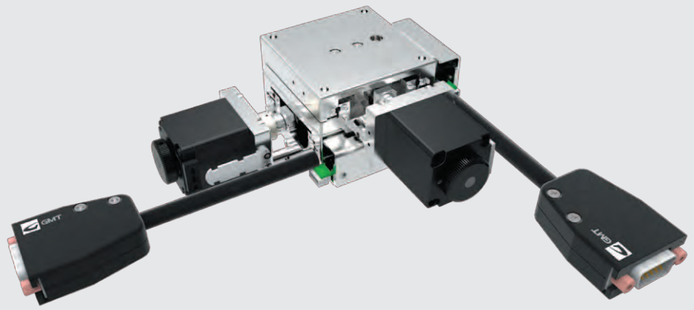

AY40-F2NR-ND

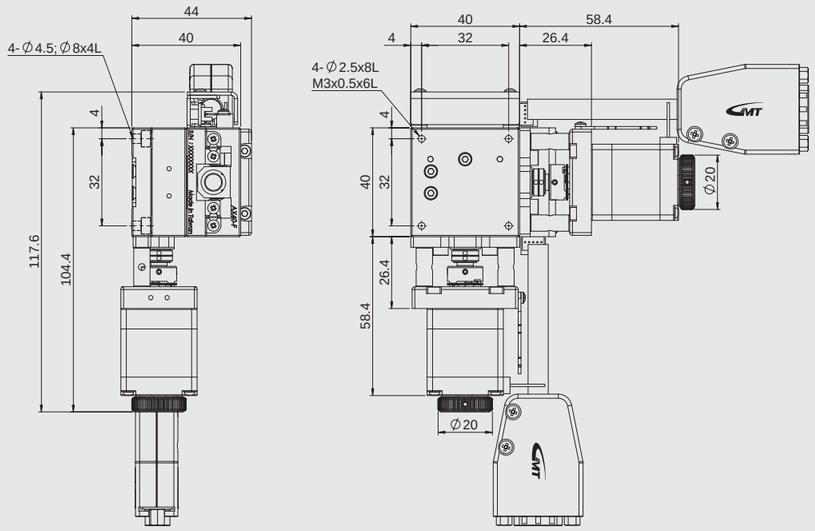

◎ Photo is AY60-F2NR-ND。

AY60-F2NR-ND

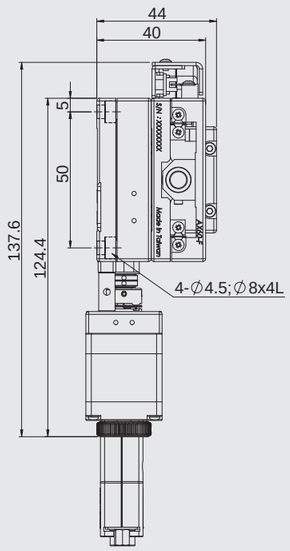

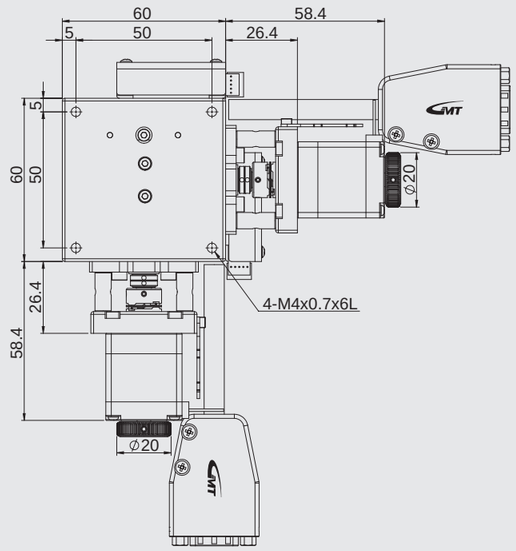

AY80-F2NR-ND

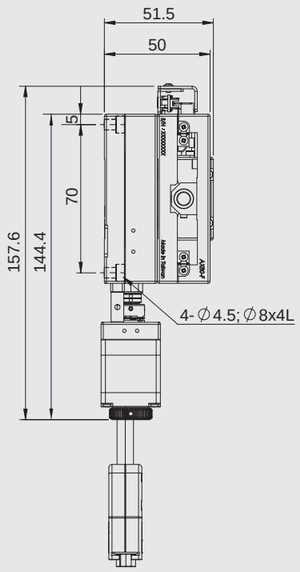

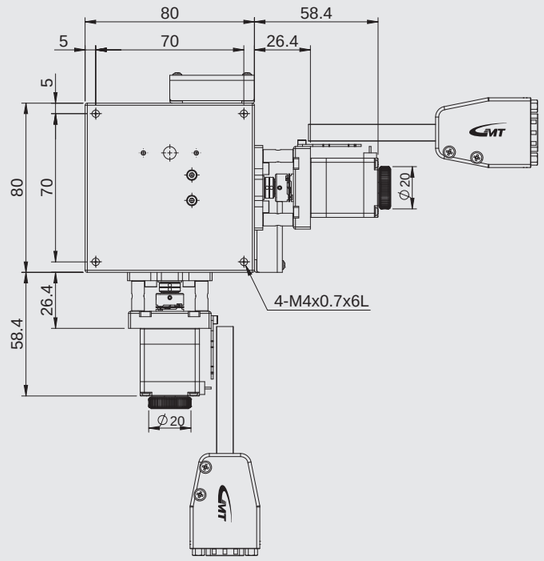

Model description

CXS50□-S series

Material		Drive type		Accuracy level		Wiring method		Motor model		Connector type	
S	Stainless Steel	2	Ball screw	N	Standard grade	N	GMT Standard	N	2-phase stepper	D	D-SUB15 (VGA)
								X	Not equipped		

CXS 50 20 - S 2 N N - N D - 2 C

Axis & serial numbers		Table size		Travel stroke	
CXS	X axis	50	50*50mm	20	20mm
				30	30mm

Connecting cable (optional)		Driver (optional)	
Blank	Not equipped	Blank	Not equipped
2	2m cable*1	C	Standard specified by GMT
4	4m cable*1		

*1 (D-SUB 15 pin female connector + the other side with discrete wirings)

Model description			CXS5020-S2NN-ND	CXS5030-S2NN-ND
Mechanical specifications	Table size		50X50 mm	
	Travel stroke		20 mm	30 mm
	Drive type		Ball screw Ø8 lead 1mm	
	Rail		Linear ball guiding	
	Stage material/Surface treatment		Stainless Steel / Nickel plating	
	Main unit weight		0.57 Kg	0.72 Kg
	Coupling		FAMCS10-5*5	
	Accuracy level		N：Standard grade	
	Wiring method		N：GMT Standard*2	
Precision specifications	Resolution (pulse)	Full / Half	5 μm / 2.5 μm	
	Maximum speed (full step)		20 mm / sec	
	Positioning precision		15 μm	
	Repeatability precision		±1 μm	
	Load capacity		6 Kgf	
	Missed step		3 μm	
	Parallelism		15 μm	
	Dynamic straightness		3 μm	
	Dynamic parallelism		10 μm	
Electrical specifications	Motor	Type/Shaft numbers	2-phase stepper / □28 double shafts	
		Brand/ Model	GMT / 2MS-N28D32A	
	Driver brand/Model		GMT/GTR22G-D (Additional options)	
	Connector	Stage side connector	15-pin male end connector D-SUB	
		Controller side connector	15-pin female end connector D-SUB (optional)	
	Sensor	Origin sensor	Photoelectric sensor EE-SX498	
		Limit sensor		
		Power voltage	24V±10%	
		Control output	NPN open collector output under 24V 8mA	
		Output control	Testing (sensing): output transistor OFF (closed)	

*2 GMT Standard wiring is defined as the product photo, and not optional available.

X axis

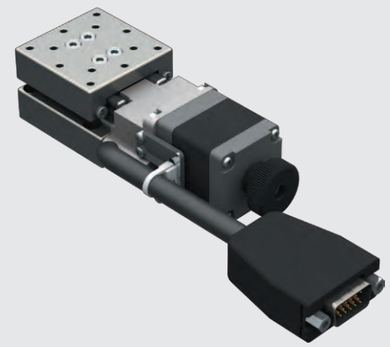

Stroke / Table size	20		30	
	L	L1	L	L1
50	134	70.5	144	80.5

CXS50□-S2NN-ND

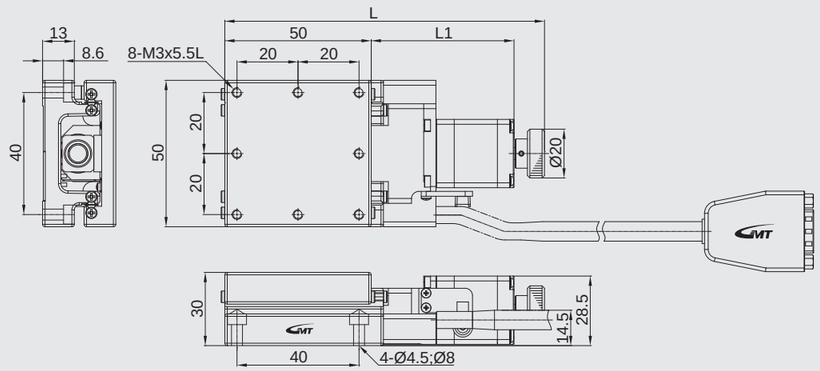

◎ Photo is CXS5030-S2NN-ND ◦

Model description

CXS60□-S series

Material	
S	Stainless Steel

Drive type	
2	Ball screw

Accuracy level	
N	Standard grade

Wiring method	
N	GMT Standard

Motor model	
N	2-phase stepper
X	Not equipped

Connector type	
D	D-SUB15 (VGA)

CXS 60 20 - S 2 N N - N D - 2 C

Axis & serial numbers	
CXS	X axis

Table size	
60	60*60mm
60	60*60mm
60	60*80mm

Travel stroke	
20	20mm
30	30mm
50	50mm

Connecting cable (optional)	
Blank	Not equipped
2	2m cable*1
4	4m cable*1

*1 (D-SUB 15 pin female connector + the other side with discrete wirings)

Driver (optional)	
Blank	Not equipped
C	Standard specified by GMT

Model description			CXS6020-S2NN-ND	CXS6030-S2NN-ND	CXS6050-S2NN-ND
Mechanical specifications	Table size		60X60 mm		60X80 mm
	Travel stroke		20 mm	30 mm	50 mm
	Drive type		Ball screw Ø8 lead 1mm		
	Rail		Linear ball guiding		
	Stage material/Surface treatment		Stainless Steel / Nickel plating		
	Main unit weight		0.75 Kg	0.8 Kg	1.11 Kg
	Coupling		FAMCS10-5*5		
	Accuracy level		N：Standard grade		
	Wiring method		N：GMT Standard*2		
Precision specifications	Resolution (pulse)	Full / Half	5 μm / 2.5 μm		
	Maximum speed (full step)		20 mm / sec		
	Positioning precision		15 μm		
	Repeatability precision		±1 μm		
	Load capacity		7 Kgf		
	Missed step		3 μm		
	Parallelism		15 μm		
	Dynamic straightness		3 μm		
	Dynamic parallelism		10 μm		
Electrical specifications	Motor	Type/Shaft numbers	2-phase stepper / □28 double shafts		
		Brand/ Model	GMT / 2MS-N28D32A		
	Driver brand/Model		GMT/GTR22G-D (Additional options)		
	Connector	Stage side connector	15-pin male end connector D-SUB		
		Controller side connector	15-pin female end connector D-SUB (optional)		
	Sensor	Origin sensor	Photoelectric sensor EE-SX498		
		Limit sensor			
		Power voltage	24V±10%		
		Control output	NPN open collector output under 24V 8mA		
		Output control	Testing (sensing): output transistor OFF (closed)		

*2 GMT Standard wiring is defined as the product photo, and not optional available.

X axis

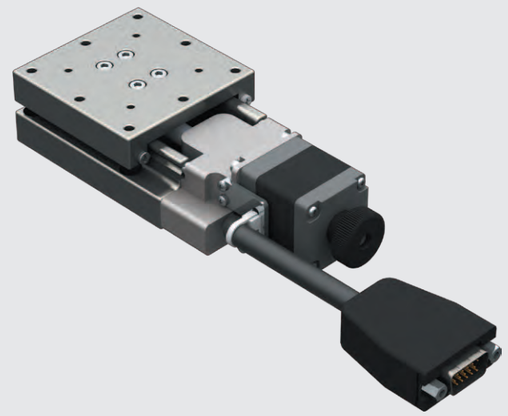

Stroke / Table size	20			30			50		
	L	L1	L2	L	L1	L2	L	L1	L2
60	131	58.5	60	141	68.5	60	194	101.5	80

CXS60□-S2NN-ND

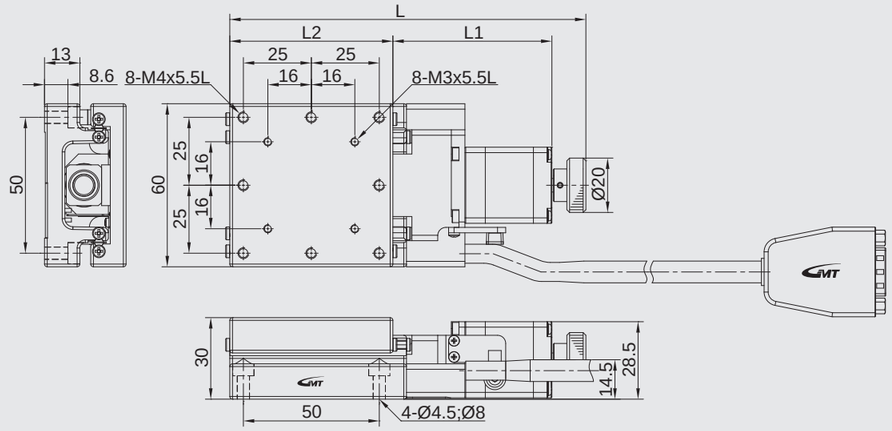

◎ Photo is CXS6030-S2NN-ND ◦

Model description

CXS80□-S series

Material	
S	Stainless Steel

Drive type	
2	Ball screw

Accuracy level	
N	Standard grade

Wiring method	
N	GMT Standard

Motor model	
N	2-phase stepper
X	Not equipped

Connector type	
D	D-SUB15 (VGA)

CXS 80 20 - S 2 N N - N D - 2 C

Axis & serial numbers	
CXS	X axis

Table size	
80	80*80mm
80	80*80mm
80	80*100mm

Travel stroke	
20	20mm
30	30mm
50	50mm

Connecting cable (optional)	
Blank	Not equipped
2	2m cable*1
4	4m cable*1

*1 (D-SUB 15 pin female connector + the other side with discrete wirings)

Driver (optional)	
Blank	Not equipped
C	Standard specified by GMT

Model description			CXS8020-S2NN-ND	CXS8030-S2NN-ND	CXS8050-S2NN-ND
Mechanical specifications	Table size		80X80 mm		80X100 mm
	Travel stroke		20 mm	30 mm	50 mm
	Drive type		Ball screw Ø8 lead 1mm		
	Rail		Linear ball guiding		
	Stage material/Surface treatment		Stainless Steel / Nickel plating		
	Main unit weight		1.15 Kg	1.2 Kg	1.35 Kg
	Coupling		FAMCS10-5*5		
	Accuracy level		N：Standard grade		
	Wiring method		N：GMT Standard*2		
Precision specifications	Resolution (pulse)	Full / Half	5 μm / 2.5 μm		
	Maximum speed (full step)		20 mm / sec		
	Positioning precision		15 μm		
	Repeatability precision		±1 μm		
	Load capacity		8 Kgf		
	Missed step		3 μm		
	Parallelism		15 μm		
	Dynamic straightness		3 μm		
	Dynamic parallelism		10 μm		
Electrical specifications	Motor	Type/Shaft numbers	2-phase stepper / □28 double shafts		
		Brand/ Model	GMT / 2MS-N28D32A		
	Driver brand/Model		GMT/GTR22G-D (Additional options)		
	Connector	Stage side connector	15-pin male end connector D-SUB		
		Controller side connector	15-pin female end connector D-SUB (optional)		
	Sensor	Origin sensor	Photoelectric sensor EE-SX498		
		Limit sensor			
		Power voltage	24V±10%		
		Control output	NPN open collector output under 24V 8mA		
		Output control	Testing (sensing): output transistor OFF (closed)		

*2 GMT Standard wiring is defined as the product photo, and not optional available.

X axis

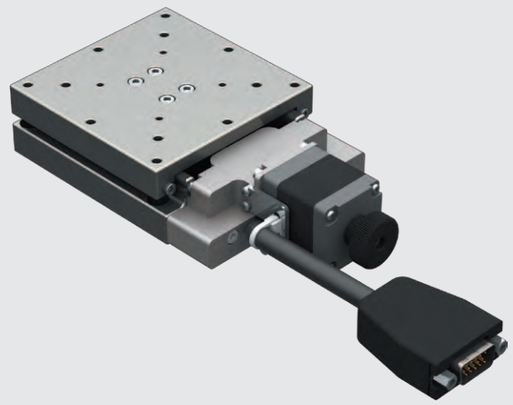

Table size \ Stroke	20			30			50		
	L	L1	L2	L	L1	L2	L	L1	L2
80	151	58.5	80	161	68.5	80	194	101.5	100

CXS80□-S2NN-ND

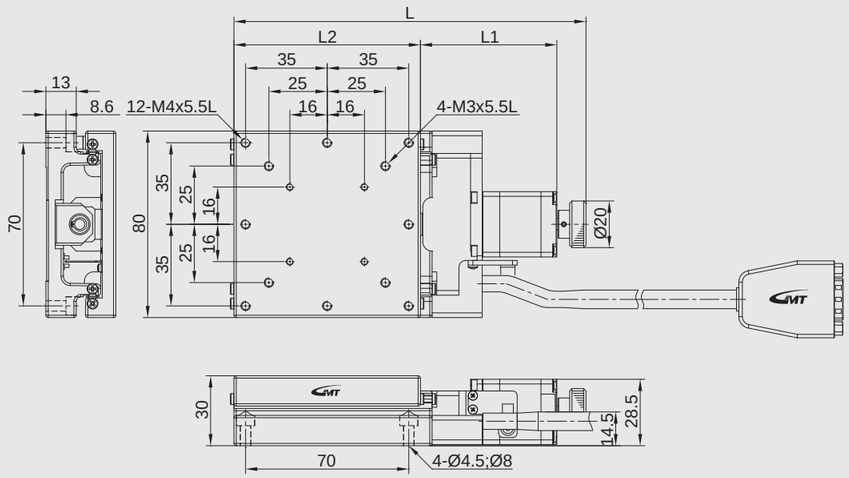

◎ Photo is CXS8030-S2NN-ND ◦

Model description

CYS50□-S series

Material	
S	Stainless Steel

Drive type	
2	Ball screw

Accuracy level	
N	Standard grade

Wiring method	
N	GMT Standard

Motor model	
N	2-phase stepper
X	Not equipped

Connector type	
D	D-SUB15 (VGA)

CYS 50 20 - S 2 N N - N D - 2 C

Axis & serial numbers	
CYS	XY axis

Table size	
50	50*50mm

Travel stroke	
20	20mm
30	30mm

Connecting cable (optional)	
Blank	Not equipped
2	2m cable*1
4	4m cable*1

*1 (D-SUB 15 pin female connector + the other side with discrete wirings)

Driver (optional)	
Blank	Not equipped
C	Standard specified by GMT

Model description			CYS5020-S2NN-ND	CYS5030-S2NN-ND
Mechanical specifications	Table size		50X50 mm	
	Travel stroke		20 mm	30 mm
	Drive type		Ball screw Ø8 lead 1mm	
	Rail		Linear ball guiding	
	Stage material/Surface treatment		Stainless Steel / Nickel plating	
	Main unit weight		0.57 Kg	0.72 Kg
	Coupling		FAMCS10-5*5	
	Accuracy level		N：Standard grade	
	Wiring method		N：GMT Standard*2	
Precision specifications	Resolution (pulse)	Full / Half	5 μm / 2.5 μm	
	Maximum speed (full step)		20 mm / sec	
	Positioning precision		15 μm	
	Repeatability precision		±1 μm	
	Load capacity		5 Kgf	
	Missed step		3 μm	
	Parallelism		15 μm	
	Dynamic straightness		3 μm	
	Dynamic parallelism		10 μm	
Electrical specifications	Motor	Type/Shaft numbers	2-phase stepper / □28 double shafts	
		Brand/ Model	GMT / 2MS-N28D32A	
	Driver brand/Model		GMT/GTR22G-D (Additional options)	
	Connector	Stage side connector	15-pin male end connector D-SUB	
		Controller side connector	15-pin female end connector D-SUB (optional)	
	Sensor	Origin sensor	Photoelectric sensor EE-SX498	
		Limit sensor		
		Power voltage	24V±10%	
		Control output	NPN open collector output under 24V 8mA	
		Output control	Testing (sensing): output transistor OFF (closed)	

*2 GMT Standard wiring is defined as the product photo, and not optional available.

XY axis

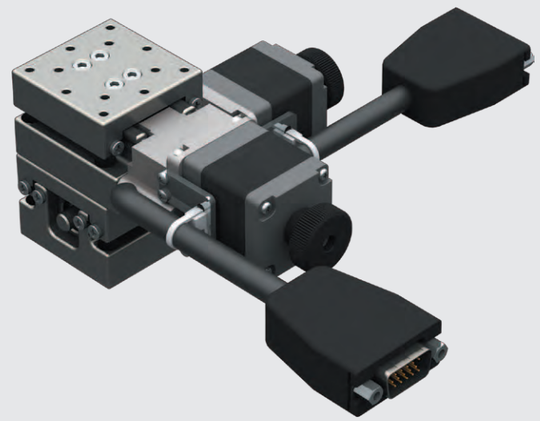

Stroke / Table size	20		30	
	L	L1	L	L1
50	134	70.5	144	80.5

CYS50□-S2NN-ND

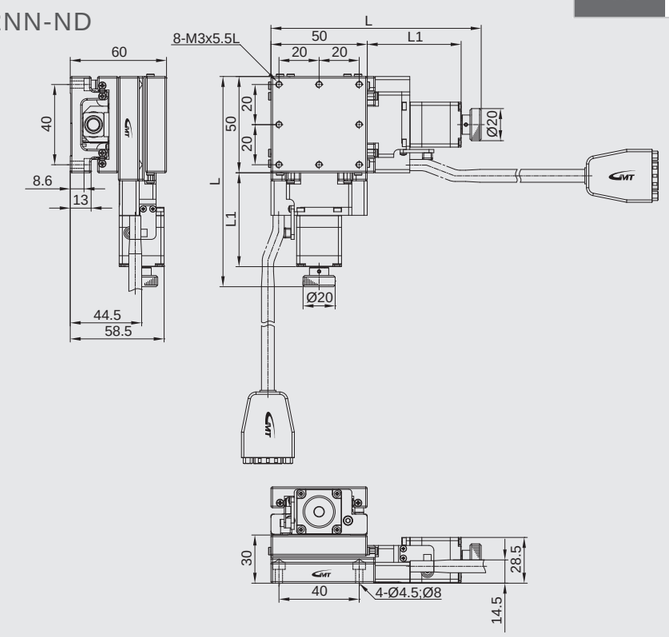

◎ Photo is CYS5030-S2NN-ND ◦

Model description

CYS60□-S series

Material		Drive type		Accuracy level		Wiring method		Motor model		Connector type	
S	Stainless Steel	2	Ball screw	N	Standard grade	N	GMT Standard	N	2-phase stepper	D	D-SUB15 (VGA)
								X	Not equipped		

CYS 60 20 - S 2 N N - N D - 2 C

Axis & serial numbers	
CYS	XY axis

Table size	
60	60*60mm
60	60*60mm
60	60*80mm

Travel stroke	
20	20mm
30	30mm
50	50mm

Connecting cable (optional)	
Blank	Not equipped
2	2m cable*1
4	4m cable*1

*1 (D-SUB 15 pin female connector + the other side with discrete wirings)

Driver (optional)	
Blank	Not equipped
C	Standard specified by GMT

Model description			CYS6020-S2NN-ND	CYS6030-S2NN-ND	CYS6050-S2NN-ND
Mechanical specifications	Table size		60X60 mm		60X80 mm
	Travel stroke		20 mm	30 mm	50 mm
	Drive type		Ball screw Ø8 lead 1mm		
	Rail		Linear ball guiding		
	Stage material/Surface treatment		Stainless Steel / Nickel plating		
	Main unit weight		0.75 Kg	0.8 Kg	1.11 Kg
	Coupling		FAMCS10-5*5		
	Accuracy level		N：Standard grade		
	Wiring method		N：GMT Standard*2		
Precision specifications	Resolution (pulse)	Full / Half	5 μm / 2.5 μm		
	Maximum speed (full step)		20 mm / sec		
	Positioning precision		15 μm		
	Repeatability precision		±1 μm		
	Load capacity		6 Kgf		
	Missed step		3 μm		
	Parallelism		15 μm		
	Dynamic straightness		3 μm		
	Dynamic parallelism		10 μm		
Electrical specifications	Motor	Type/Shaft numbers	2-phase stepper / □28 double shafts		
		Brand/ Model	GMT / 2MS-N28D32A		
	Driver brand/Model		GMT/GTR22G-D (Additional options)		
	Connector	Stage side connector	15-pin male end connector D-SUB		
		Controller side connector	15-pin female end connector D-SUB (optional)		
	Sensor	Origin sensor	Photoelectric sensor EE-SX498		
		Limit sensor			
		Power voltage	24V±10%		
		Control output	NPN open collector output under 24V 8mA		
		Output control	Testing (sensing): output transistor OFF (closed)		

*2 GMT Standard wiring is defined as the product photo, and not optional available.

XY axis

CYS60□-S2NN-ND

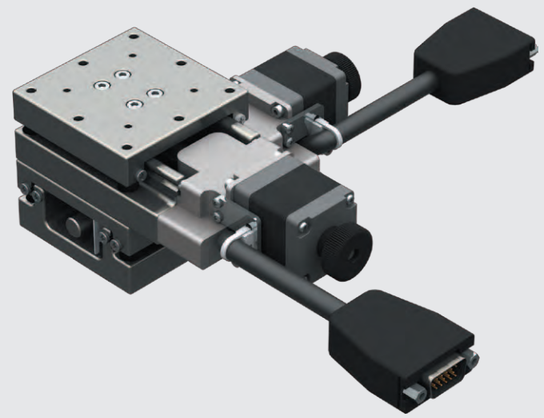

Stroke / Table size	20				30				31			
	L	L1	L2	L3	L	L1	L2	L3	L	L1	L2	L3
60	131	58.5	60	60	141	68.5	60	60	194	101.5	80	60

CYS60□-S2NN-ND

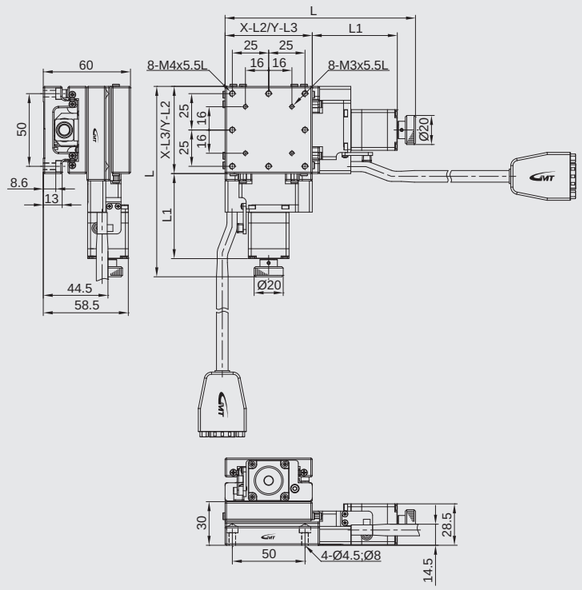

◎ Photo is CYS6030-S2NN-ND ◦

Model description

CYS80□-S series

Material	
S	Stainless Steel

Drive type	
2	Ball screw

Accuracy level	
N	Standard grade

Wiring method	
N	GMT Standard

Motor model	
N	2-phase stepper
X	Not equipped

Connector type	
D	D-SUB15 (VGA)

CYS 80 20 - S 2 N N - N D - 2 C

Axis & serial numbers	
CYS	XY axis

Table size	
80	80*80mm
80	80*80mm
80	80*100mm

Travel stroke	
20	20mm
30	30mm
50	50mm

Connecting cable (optional)	
Blank	Not equipped
2	2m cable*1
4	4m cable*1

*1 (D-SUB 15 pin female connector + the other side with discrete wirings)

Driver (optional)	
Blank	Not equipped
C	Standard specified by GMT

Model description			CYS8020-S2NN-ND	CYS8030-S2NN-ND	CYS8050-S2NN-ND
Mechanical specifications	Table size		80X80 mm		80X100 mm
	Travel stroke		20 mm	30 mm	50 mm
	Drive type		Ball screw Ø8 lead 1mm		
	Rail		Linear ball guiding		
	Stage material/Surface treatment		Stainless Steel / Nickel plating		
	Main unit weight		1.15 Kg	1.2 Kg	1.35 Kg
	Coupling		FAMCS10-5*5		
	Accuracy level		N：Standard grade		
	Wiring method		N：GMT Standard*2		
Precision specifications	Resolution (pulse)	Full / Half	5 μm / 2.5 μm		
	Maximum speed (full step)		20 mm / sec		
	Positioning precision		15 μm		
	Repeatability precision		±1 μm		
	Load capacity		7 Kgf		
	Missed step		3 μm		
	Parallelism		15 μm		
	Dynamic straightness		3 μm		
	Dynamic parallelism		10 μm		
Electrical specifications	Motor	Type/Shaft numbers	2-phase stepper / □28 double shafts		
		Brand/ Model	GMT / 2MS-N28D32A		
	Driver brand/Model		GMT/GTR22G-D (Additional options)		
	Connector	Stage side connector	15-pin male end connector D-SUB		
		Controller side connector	15-pin female end connector D-SUB (optional)		
	Sensor	Origin sensor	Photoelectric sensor EE-SX498		
		Limit sensor			
		Power voltage	24V±10%		
		Control output	NPN open collector output under 24V 8mA		
		Output control	Testing (sensing): output transistor OFF (closed)		

*2 GMT Standard wiring is defined as the product photo, and not optional available.

XY axis

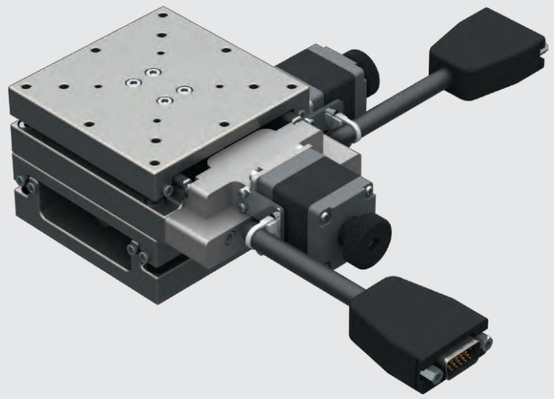

Stroke / Table size	20				30				31			
	L	L1	L2	L3	L	L1	L2	L3	L	L1	L2	L3
80	151	58.5	80	80	161	68.5	80	80	194	101.5	100	80

CYS80□-S2NN-ND

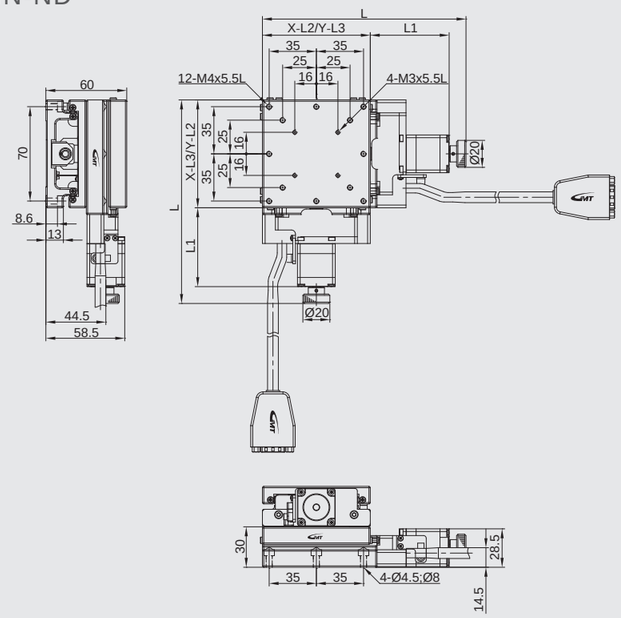

◎ Photo is CYS8030-S2NN-ND ◦

Model description CXN50□/CXC50□-S series

Material	
S	Stainless Steel

Drive type	
2	Ball screw

Accuracy level	
N	Standard grade

Wiring method	
N	GMT Standard

Motor model	
N	2-phase stepper
X	Not equipped

Connector type	
D	D-SUB15 (VGA)

CXN 50 30 - S 2 N N - N D - P1 2 C

Axis & serial numbers	
CXN	X axis (w/o cover)
CXC	X axis (w/cover)

Table size	
50	50*50mm

Stroke	
30	30mm
50	50mm
75	75mm

Ball screw pitch	
P1	1mm
P2	2mm

Connecting cable (optional)	
Blank	Not equipped
2	2m cable*1
4	4m cable*1
6	6m cable*1

*1 (D-SUB 15 pin female connector + the other side with discrete wirings)

Driver (optional)	
Blank	Not equipped
C	Standard specified by GMT

Model description		CXN5030-S2NN-ND-P1	CXN5030-S2NN-ND-P2	CXN5050-S2NN-ND-P1	CXN5050-S2NN-ND-P2	CXN5075-S2NN-ND-P1	CXN5075-S2NN-ND-P2
		CXC5030-S2NN-ND-P1	CXC5030-S2NN-ND-P2	CXC5050-S2NN-ND-P1	CXC5050-S2NN-ND-P2	CXC5075-S2NN-ND-P1	CXC5075-S2NN-ND-P2
Mechanical specifications	Table size	50X50 mm					
	Travel stroke	30 mm		50 mm		75 mm	
	Drive type	Ball screw Ø8 lead 1mm	Ball screw Ø8 lead 2mm	Ball screw Ø8 lead 1mm	Ball screw Ø8 lead 2mm	Ball screw Ø8 lead 1mm	Ball screw Ø8 lead 2mm
	Rail	Circular Linear ball guiding					
	Stage material/Surface treatment	Stainless Steel / Nickel plating					
	Main unit weight	N：0.97 Kg / C：1.06 Kg		N：1.1 Kg / C：1.17 Kg		N：1.24 Kg / C：1.29 Kg	
	Coupling	FAMCS10-5*5					
	Accuracy level	N：Standard grade					
	Wiring method	N：GMT Standard*2					
Precision specifications	Resolution (pulse) Full / Half	5 μm / 2.5 μm	10 μm / 5 μm	5 μm / 2.5 μm	10 μm / 5 μm	5 μm / 2.5 μm	10 μm / 5 μm
	Maximum speed (full step)	20 mm / sec	40 mm / sec	20 mm / sec	40 mm / sec	20 mm / sec	40 mm / sec
	Positioning precision	5 μm				7 μm	
	Repeatability precision	±0.5 μm					
	Load capacity	10 Kgf					
	Missed step	1 μm					
	Parallelism	15 μm					
	Dynamic straightness	1 μm					
	Dynamic parallelism	10 μm					
Electrical specifications	Motor: Type/Shaft numbers	2-phase stepper / □28 double shafts					
	Motor: Brand/ Model	GMT / 2MS-N28D32A					
	Driver brand/Model	GMT/GTR22G-D (Additional options)					
	Connector: Stage side connector	15-pin male end connector D-SUB					
	Connector: Controller side connector	15-pin female end connector D-SUB (optional)					
	Sensor: Origin sensor	Photoelectric sensor EE-SX498					
	Sensor: Limit sensor						
	Sensor: Power voltage	24V±10%					
	Sensor: Control output	NPN open collector output under 24V 8mA					
	Sensor: Output control	Testing (sensing): output transistor OFF (closed)					

*2 GMT Standard wiring is defined as the product photo, and not optional available.

X axis

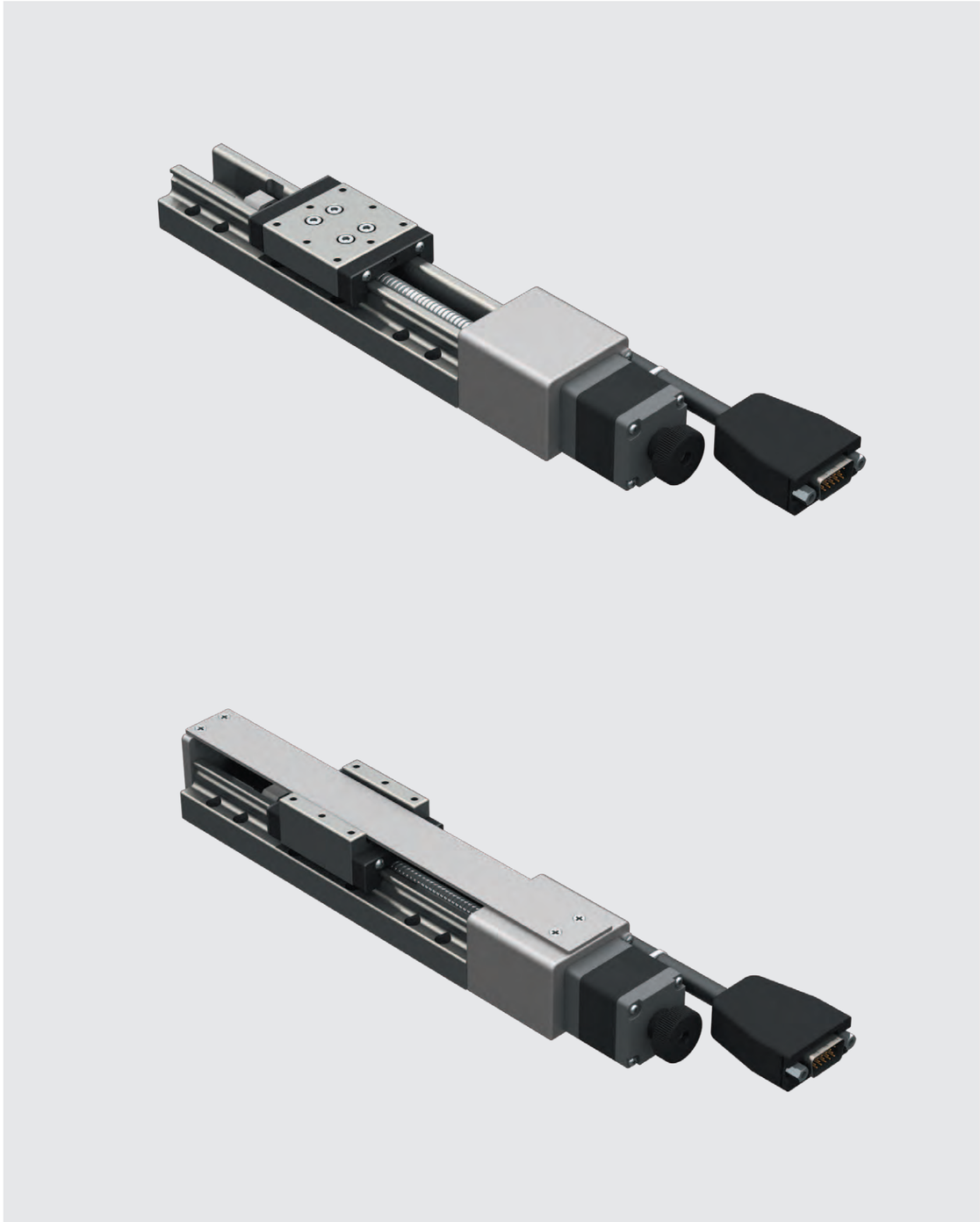

◎ Photos are CXN60100-S2NN-ND(UP) and CXC60100-S2NN-ND(DOWN).

CXN50□-S2NN-ND

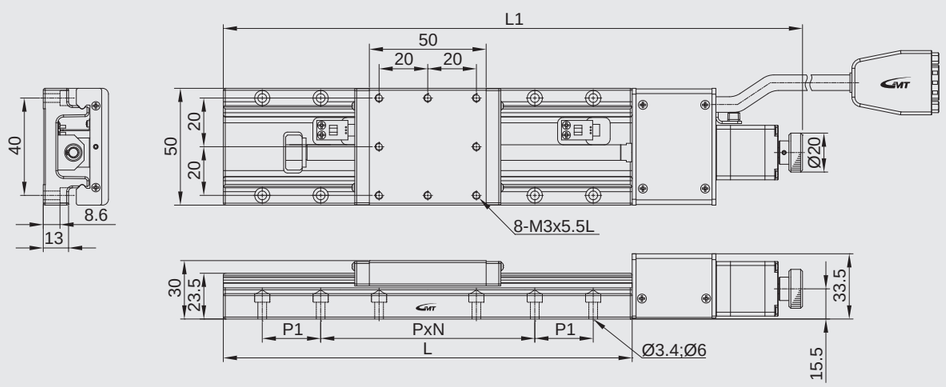

Stroke	L	L1	P	N	P1
30	110	197.5	40	1	20
50	120	217.5	40	3	N/A
75	145	242.5	40	3	N/A

CXC50□-S2NN-ND

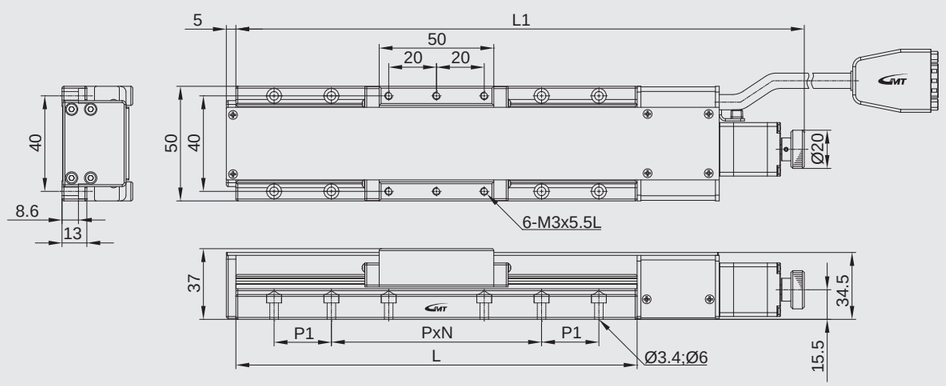

Stroke	L	L1	P	N	P1
30	110	197.5	40	1	20
50	120	217.5	40	3	N/A
75	145	242.5	40	3	N/A

Model description CXN50□/CXC50□-S series

Material	
S	Stainless Steel

Drive type	
2	Ball screw

Accuracy level	
N	Standard grade

Wiring method	
N	GMT Standard

Motor model	
N	2-phase stepper
X	Not equipped

Connector type	
D	D-SUB15 (VGA)

CXN 50 100 - S 2 N N - N D - P1 2 C

Axis & serial numbers	
CXN	X axis (w/o cover)
CXC	X axis (w/cover)

Table size	
50	50*50mm

Stroke	
100	100mm
150	150mm
200	200mm

Ball screw pitch	
P1	1mm
P2	2mm

Connecting cable (optional)	
Blank	Not equipped
2	2m cable*1
4	4m cable*1
6	6m cable*1

*1 (D-SUB 15 pin female connector + the other side with discrete wirings)

Driver (optional)	
Blank	Not equipped
C	Standard specified by GMT

Model Number			CXN50100-S2NN-ND-P1	CXN50100-S2NN-ND-P2	CXN50150-S2NN-ND-P1	CXN50150-S2NN-ND-P2	CXN50200-S2NN-ND-P1	CXN50200-S2NN-ND-P2
			CXC50100-S2NN-ND-P1	CXC50100-S2NN-ND-P2	CXC50150-S2NN-ND-P1	CXC50150-S2NN-ND-P2	CXC50200-S2NN-ND-P1	CXC50200-S2NN-ND-P2
Mechanical specifications	Table size		50X50 mm					
	Travel stroke		100 mm		150 mm		200 mm	
	Drive type		Ball screw Ø8 lead 1mm	Ball screw Ø8 lead 2mm	Ball screw Ø8 lead 1mm	Ball screw Ø8 lead 2mm	Ball screw Ø8 lead 1mm	Ball screw Ø8 lead 2mm
	Rail		Circular Linear ball guiding					
	Stage material/Surface treatment		Stainless Steel / Nickel plating					
	Main unit weight		N：1.35 Kg / C：1.39 Kg		N：1.5 Kg / C：1.82 Kg		N：1.76 Kg / C：2.02 Kg	
	Coupling		FAMCS10-5*5					
	Accuracy level		N：Standard grade					
	Wiring method		N：GMT Standard*2					
Precision specifications	Resolution (pulse)	Full / Half	5 μm / 2.5 μm	10 μm / 5 μm	5 μm / 2.5 μm	10 μm / 5 μm	5 μm / 2.5 μm	10 μm / 5 μm
	Maximum speed (full step)		20 mm / sec	40 mm / sec	20 mm / sec	40 mm / sec	20 mm / sec	40 mm / sec
	Positioning precision		15 μm		20 μm			
	Repeatability precision		±1 μm					
	Load capacity		10 Kgf					
	Missed step		3 μm					
	Parallelism		15 μm					
	Dynamic straightness		5 μm					
	Dynamic parallelism		15 μm					
Electrical specifications	Motor	Type/Shaft numbers	2-phase stepper / □28 double shafts					
		Brand/ Model	GMT / 2MS-N28D45A					
	Driver brand/Model		GMT/GTR22G-D (Additional options)					
	Connector	Stage side connector	15-pin male end connector D-SUB					
		Controller side connector	15-pin female end connector D-SUB (optional)					
	Sensor	Origin sensor	Photoelectric sensor EE-SX4134					
		Limit sensor						
		Origin approximation sensor	N/A					
		Power voltage	24V±10%					
		Control output	NPN open collector output under 24V 8mA					
		Output control	Testing (sensing)：output transistor OFF (closed)					

*2 GMT Standard wiring is defined as the product photo, and not optional available.

X axis

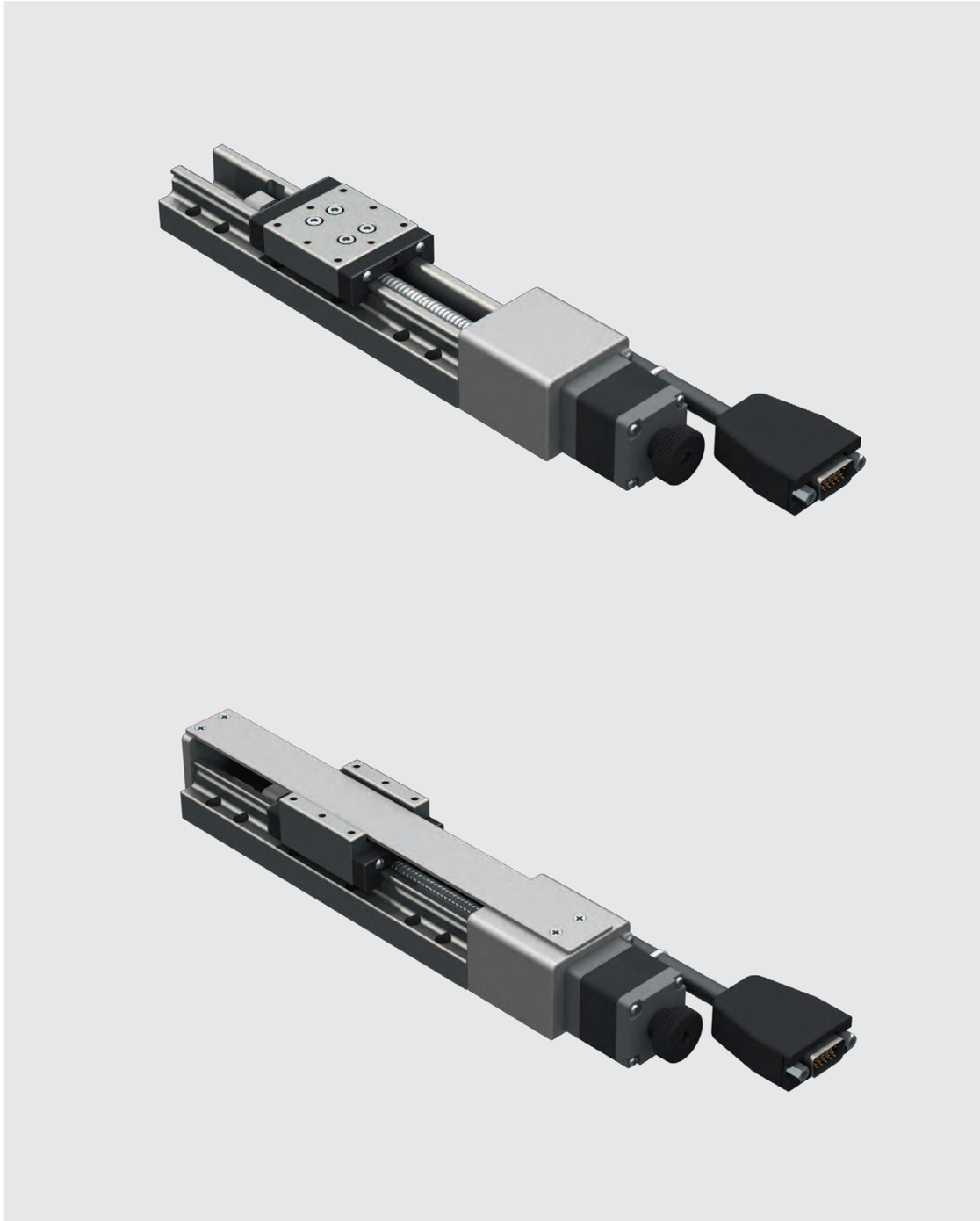

◎ Photos are CXN50100-S2NN-ND(UP) and CXC50100-S2NN-ND(DOWN).

CXN50□-S2NN-ND

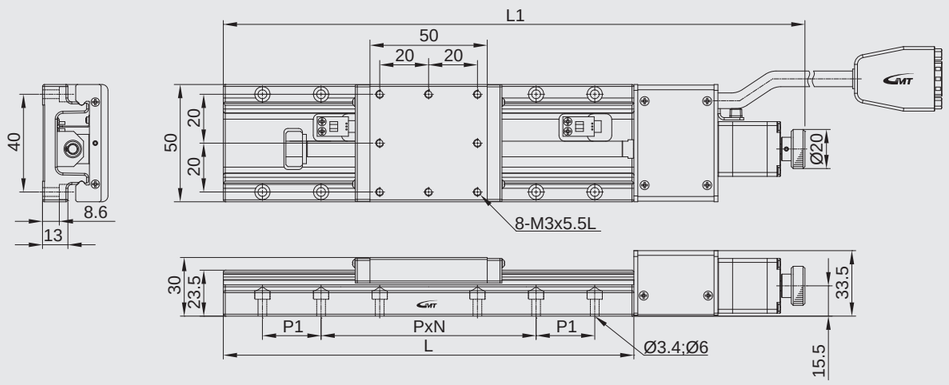

Stroke	L	L1	P	N	P1
100	170	268	40	4	N/A
150	220	318	40	5	16
200	270	368	40	6	N/A

CXC50□-S2NN-ND

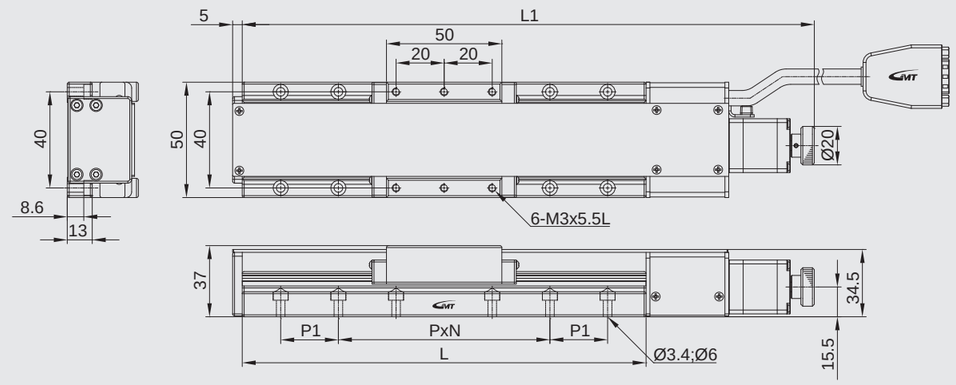

Stroke	L	L1	P	N	P1
100	170	268	40	4	N/A
150	220	318	40	5	16
200	270	368	40	6	N/A

Model description CXN60□/CXC60□-S series

Material	
S	Stainless Steel

Drive type	
2	Ball screw

Accuracy level	
N	Standard grade

Wiring method	
N	GMT Standard

Motor model	
N	2-phase stepper
X	Not equipped

Connector type	
D	D-SUB15 (VGA)

CXN 60 30 - S 2 N N - N D - P1 - 2 C

Axis & serial numbers	
CXN	X axis (w/o cover)
CXC	X axis (w/cover)

Table size	
60	60*60mm

Stroke	
30	30mm
50	50mm
75	75mm
100	100mm

Ball screw pitch	
P1	1mm
P2	2mm

Connecting cable (optional)	
Blank	Not equipped
2	2m cable*1
4	4m cable*1
6	6m cable*1

*1 (D-SUB 15 pin female connector + the other side with discrete wirings)

Driver (optional)	
Blank	Not equipped
C	Standard specified by GMT

Model Number			CXN6030-S2NN-ND-P1	CXN6030-S2NN-ND-P2	CXN6050-S2NN-ND-P1	CXN6050-S2NN-ND-P2	CXN6075-S2NN-ND-P1	CXN6075-S2NN-ND-P2	CXN60100-S2NN-ND-P1	CXN60100--S2NN-ND-P2
			CXC6030-S2NN-ND-P1	CXC6030-S2NN-ND-P2	CXC6050-S2NN-ND-P1	CXC6050-S2NN-ND-P2	CXC6075-S2NN-ND-P1	CXC6075-S2NN-ND-P2	CXC60100-S2NN-ND-P1	CXC60100--S2NN-ND-P2
Mechanical specifications	Table size		60X60 mm							
	Travel stroke		30 mm		50 mm		75 mm		100 mm	
	Drive type		Ball screw Ø8 lead 1mm	Ball screw Ø8 lead 2mm	Ball screw Ø8 lead 1mm	Ball screw Ø8 lead 2mm	Ball screw Ø8 lead 1mm	Ball screw Ø8 lead 2mm	Ball screw Ø8 lead 1mm	Ball screw Ø8 lead 2mm
	Rail		Circular Linear ball guiding							
	Stage material/Surface treatment		Stainless Steel / Nickel plating							
	Main unit weight		N：1.1 Kg / C：1.29 Kg		N：1.19 Kg / C：1.33 Kg		N：1.3 Kg / C：1.44 Kg		N：1.47 Kg / C：1.61 Kg	
	Coupling		FAMCS10-5*5							
	Accuracy level		N：Standard grade							
	Wiring method		N：GMT Standard*2							
Precision specifications	Resolution (pulse)	Full / Half	5 μm / 2.5 μm	10 μm / 5 μm	5 μm / 2.5 μm	10 μm / 5 μm	5 μm / 2.5 μm	10 μm / 5 μm	5 μm / 2.5 μm	10 μm / 5 μm
	Maximum speed (full step)		20 mm / sec	40 mm / sec	20 mm / sec	40 mm / sec	20 mm / sec	40 mm / sec	20 mm / sec	40 mm / sec
	Positioning precision		10 μm				15 μm			
	Repeatability precision		±1 μm							
	Load capacity		14 Kgf							
	Missed step		3 μm							
	Parallelism		20 μm							
	Dynamic straightness		3 μm							
	Dynamic parallelism		10 μm							
Electrical specifications	Motor	Type/Shaft numbers	2-phase stepper / □28 double shafts							
		Brand/ Model	GMT / 2MS-N28D32A							
	Driver brand/Model		GMT/GTR22G-D (Additional options)							
	Connector	Stage side connector	15-pin male end connector D-SUB							
		Controller side connector	15-pin female end connector D-SUB (optional)							
	Sensor	Origin sensor	Photoelectric sensor EE-SX4134							
		Limit sensor								
		Origin approximation sensor	N/A							
		Power voltage	24V±10%							
		Control output	NPN open collector output under 24V 8mA							
		Output control	Testing (sensing)：output transistor OFF (closed)							

*2 GMT Standard wiring is defined as the product photo, and not optional available.

X axis

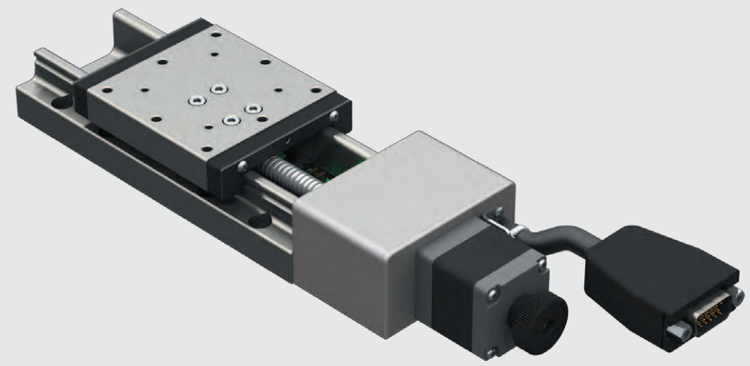

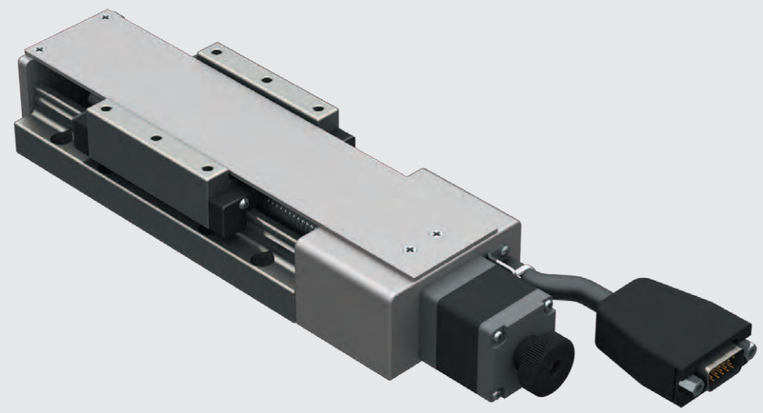

◎ Photos are CXN60100-S2NN-ND(UP) and CXC60100-S2NN-ND(DOWN).

CXN60□-S2NN-ND

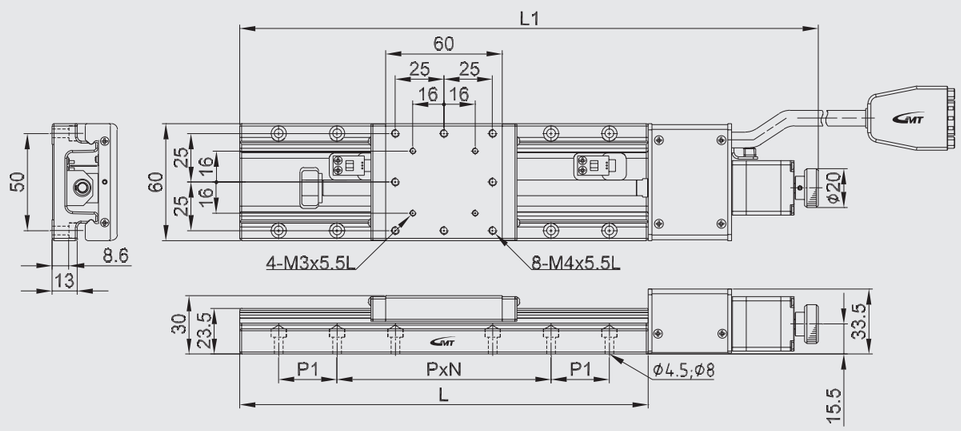

Stroke	L	L1	P	N	P1
30	120	209	50	1	25
50	140	229	50	1	25
75	165	254	50	3	N/A
100	190	298.5	50	3	N/A

CXC60□-S2NN-ND

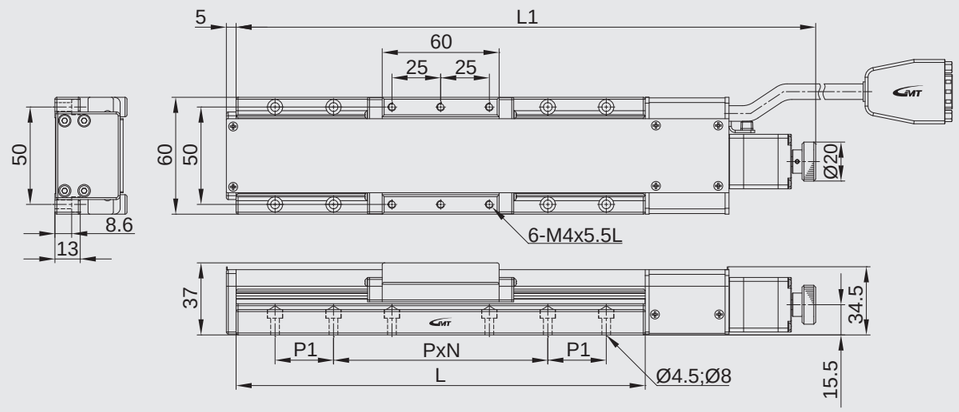

Stroke	L	L1	P	N	P1
30	120	209	50	1	25
50	140	229	50	1	25
75	165	254	50	3	N/A
100	190	298.5	50	3	N/A

Model description CXN60□/CXC60□-S series

Material	
S	Stainless Steel

Drive type	
2	Ball screw

Accuracy level	
N	Standard grade

Wiring method	
N	GMT Standard

Motor model	
N	2-phase stepper
X	Not equipped

Connector type	
D	D-SUB15 (VGA)

CXN 60 150 - S 2 N N - N D - P2 2 C

Axis & serial numbers	
CXN	X axis (w/o cover)
CXC	X axis (w/cover)

Table size	
60	60*60mm

Stroke	
150	150mm
200	200mm
250	250mm
300	300mm

Ball screw pitch	
P2	2mm

Connecting cable (optional)	
Blank	Not equipped
2	2m cable*1
4	4m cable*1

*1 (D-SUB 15 pin female connector + the other side with discrete wirings)

Driver (optional)	
Blank	Not equipped
C	Standard specified by GMT

Model description			CXN60150-S2NN-ND-P2	CXN60200-S2NN-ND-P2	CXN60250-S2NN-ND-P2	CXN60300-S2NN-ND-P2
			CXC60150-S2NN-ND-P2	CXC60200-S2NN-ND-P2	CXC60250-S2NN-ND-P2	CXC60300-S2NN-ND-P2
Mechanical specifications	Table size		60X60 mm			
	Travel stroke		150 mm	200 mm	250 mm	300 mm
	Drive type		Ball screw Ø8 lead 2mm			
	Rail		Circular Linear ball guiding			
	Stage material/Surface treatment		Stainless Steel / Nickel plating			
	Main unit weight		N：1.8 Kg / C：1.94 Kg	N：2 Kg / C：2.14 Kg	N：2.3 Kg / C：2.44 Kg	N：2.6 Kg / C：2.74 Kg
	Coupling		FAMCS10-5*5			
	Accuracy level		N：Standard grade			
	Wiring method		N：GMT Standard*2			
Precision specifications	Resolution (pulse)	Full / Half	10 μm / 5 μm			
	Maximum speed (full step)		40 mm / sec			
	Positioning precision		20 μm		30 μm	
	Repeatability precision		±1 μm			
	Load capacity		14 Kgf			
	Missed step		3 μm			
	Parallelism		20 μm			
	Dynamic straightness		5 μm			
	Dynamic parallelism		10 μm			
Electrical specifications	Motor	Type/Shaft numbers	2-phase stepper / □28 double shafts			
		Brand/ Model	GMT / 2MS-N28D45A			
	Driver brand/Model		GMT/GTR22G-D (Additional options)			
	Connector	Stage side connector	15-pin male end connector D-SUB			
		Controller side connector	15-pin female end connector D-SUB (optional)			
	Sensor	Origin sensor	Photoelectric sensor EE-SX498			
		Limit sensor				
		Power voltage	24V±10%			
		Control output	NPN open collector output under 24V 8mA			
		Output control	Testing (sensing): output transistor OFF (closed)			

*2 GMT Standard wiring is defined as the product photo, and not optional available.

X axis

◎ Photos are CXN60100-S2NN-ND(UP) and CXC60100-S2NN-ND(DOWN).

CXN60□-S2NN-ND

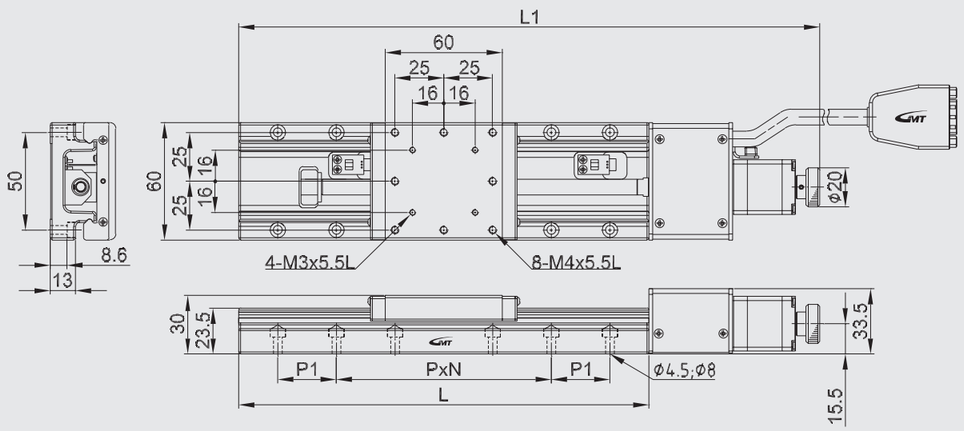

Stroke	L	L1	P	N	P1
150	240	348.5	25	4	50
200	290	398.5	50	5	N/A
250	340	448.5	50	5	N/A
300	390	498.5	50	7	N/A

CXC60□-S2NN-ND

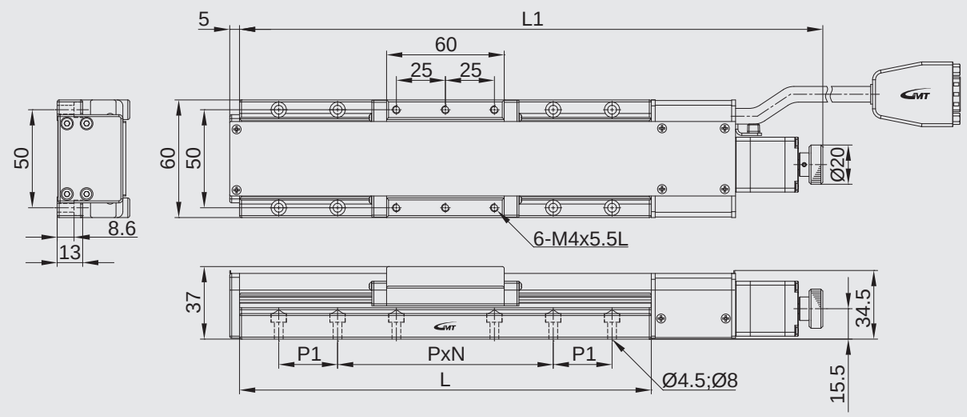

Stroke	L	L1	P	N	P1
150	240	348.5	25	4	50
200	290	398.5	50	5	N/A
250	340	448.5	50	5	N/A
300	390	498.5	50	7	N/A

Model description CXN80□/CXC80□-S series

Material	
S	Stainless Steel

Drive type	
2	Ball screw

Accuracy level	
N	Standard grade

Wiring method	
N	GMT Standard

Motor model	
N	2-phase stepper
X	Not equipped

Connector type	
D	D-SUB15 (VGA)

CXN 80 30 - S 2 N N - N D - P1 2 C

Axis & serial numbers	
CXN	X axis (w/o cover)
CXC	X axis (w/cover)

Table size	
80	80*80mm

Stroke	
30	30mm
50	50mm
75	75mm
100	100mm

Ball screw pitch	
P1	1mm
P2	2mm

Connecting cable (optional)	
Blank	Not equipped
2	2m cable*1
4	4m cable*1

*1 (D-SUB 15 pin female connector + the other side with discrete wirings)

Driver (optional)	
Blank	Not equipped
C	Standard specified by GMT

Model Number		CXN8030-S2NN-ND-P1	CXN8030-S2NN-ND-P2	CXN8050-S2NN-ND-P1	CXN8050-S2NN-ND-P2	CXN8075-S2NN-ND-P1	CXN8075-S2NN-ND-P2	CXN80100-S2NN-ND-P1	CXN80100--S2NN-ND-P2
		CXC8030-S2NN-ND-P1	CXC8030-S2NN-ND-P2	CXC8050-S2NN-ND-P1	CXC8050-S2NN-ND-P2	CXC8075-S2NN-ND-P1	CXC8075-S2NN-ND-P2	CXC80100-S2NN-ND-P1	CXC80100--S2NN-ND-P2
Mechanical specifications	Table size	60X60 mm							
	Travel stroke	30 mm		50 mm		75 mm		100 mm	
	Drive type	Ball screw Ø8 lead 1mm	Ball screw Ø8 lead 2mm	Ball screw Ø8 lead 1mm	Ball screw Ø8 lead 2mm	Ball screw Ø8 lead 1mm	Ball screw Ø8 lead 2mm	Ball screw Ø8 lead 1mm	Ball screw Ø8 lead 2mm
	Rail	Circular Linear ball guiding							
	Stage material/Surface treatment	Stainless Steel / Nickel plating							
	Main unit weight	N：1.5 Kg / C：1.79 Kg		N：1.68 Kg / C：1.86 Kg		N：1.84 Kg / C：2.03 Kg		N：2.02 Kg / C：2.2 Kg	
	Coupling	FAMCS10-5*5							
	Accuracy level	N：Standard grade							
	Wiring method	N：GMT Standard*2							
Precision specifications	Resolution (pulse) Full / Half	5 μm / 2.5 μm	10 μm / 5 μm	5 μm / 2.5 μm	10 μm / 5 μm	5 μm / 2.5 μm	10 μm / 5 μm	5 μm / 2.5 μm	10 μm / 5 μm
	Maximum speed (full step)	20 mm / sec	40 mm / sec	20 mm / sec	40 mm / sec	20 mm / sec	40 mm / sec	20 mm / sec	40 mm / sec
	Positioning precision	10 μm				15 μm			
	Repeatability precision	±1 μm							
	Load capacity	16 Kgf							
	Missed step	3 μm							
	Parallelism	20 μm							
	Dynamic straightness	3 μm							
	Dynamic parallelism	10 μm							
Electrical specifications	Motor: Type/Shaft numbers	2-phase stepper / □28 double shafts							
	Motor: Brand/ Model	GMT / 2MS-N28D32A							
	Driver brand/Model	GMT/GTR22G-D (Additional options)							
	Connector: Stage side connector	15-pin male end connector D-SUB							
	Connector: Controller side connector	15-pin female end connector D-SUB (optional)							
	Sensor: Origin sensor	Photoelectric sensor EE-SX4134							
	Sensor: Limit sensor								
	Sensor: Origin approximation sensor	N/A							
	Sensor: Power voltage	24V±10%							
	Sensor: Control output	NPN open collector output under 24V 8mA							
	Sensor: Output control	Testing (sensing)：output transistor OFF (closed)							

*2 GMT Standard wiring is defined as the product photo, and not optional available.

X axis

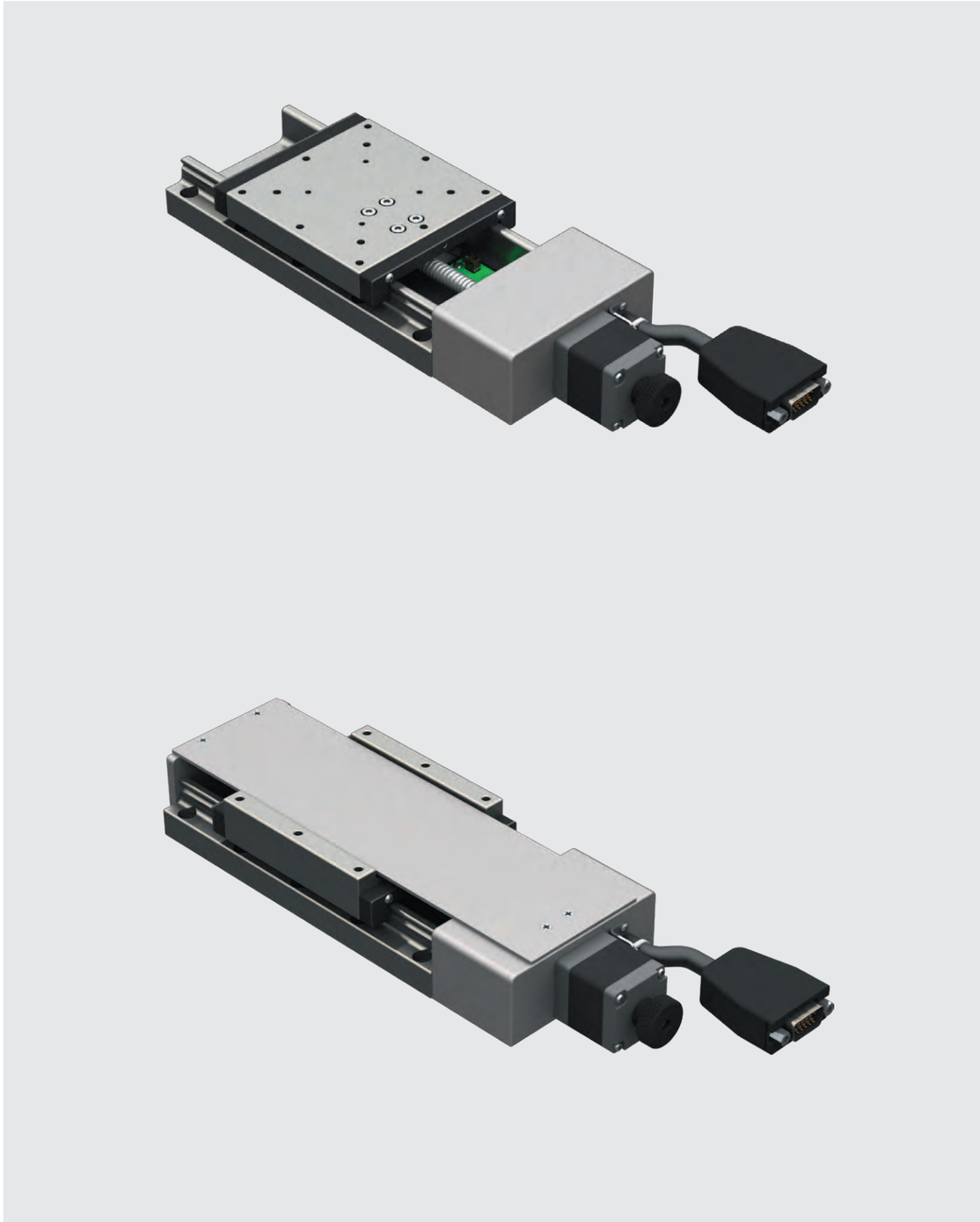

◎ Photos are CXN80100-S2NN-ND(UP) and CXC80100-S2NN-ND(DOWN).

CXN80□-S2NN-ND

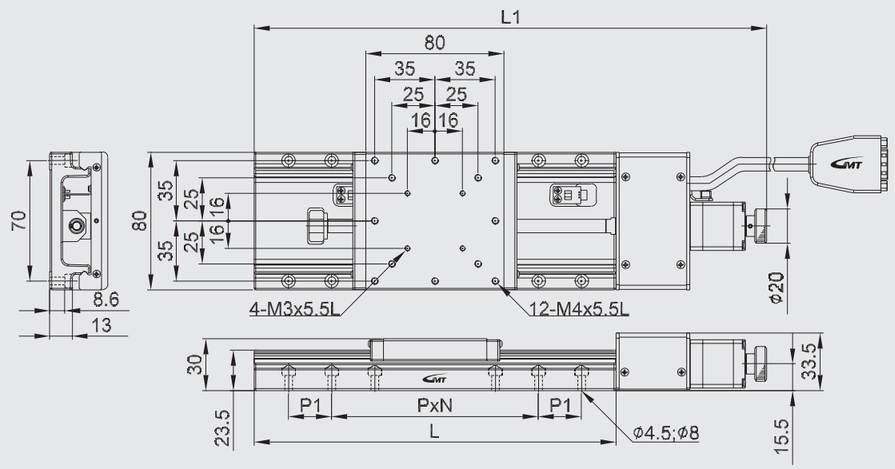

Stroke	L	L1	P	N	P1
30	140	229	70	1	25
50	160	247.5	35	4	35
75	185	272.5	35	4	35
100	210	317.5	70	1	35

CXC80□-S2NN-ND

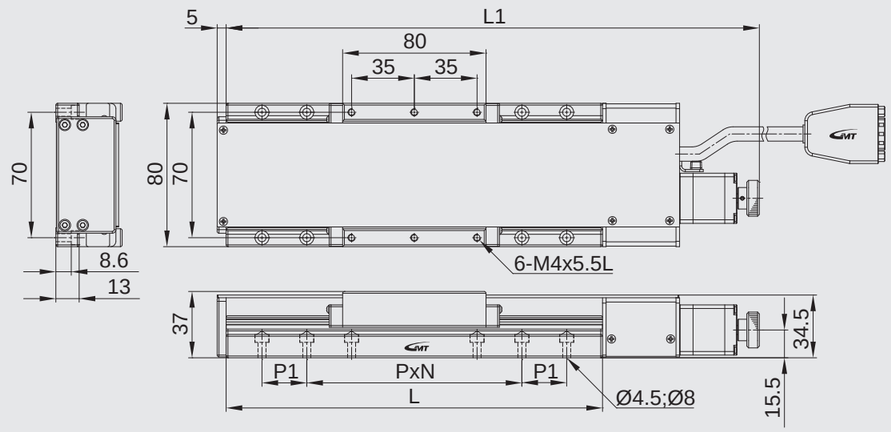

Stroke	L	L1	P	N	P1
30	140	229	70	1	25
50	160	247.5	35	4	35
75	185	272.5	35	4	35
100	210	317.5	70	1	35

Model description CXN80□/CXC80□-S series

Material	
S	Stainless Steel

Drive type	
2	Ball screw

Accuracy level	
N	Standard grade

Wiring method	
N	GMT Standard

Motor model	
N	2-phase stepper
X	Not equipped

Connector type	
D	D-SUB15 (VGA)

CXN 80 150 - S 2 N N - N D - P2 2 C

Axis & serial numbers	
CXN	X axis (w/o cover)
CXC	X axis (w/cover)

Table size	
80	80*80mm

Stroke	
150	150mm
200	200mm
250	250mm
300	300mm

Ball screw pitch	
P2	2mm

Connecting cable (optional)	
Blank	Not equipped
2	2m cable*1
4	4m cable*1

*1 (D-SUB 15 pin female connector + the other side with discrete wirings)

Driver (optional)	
Blank	Not equipped
C	Standard specified by GMT

Model description			CXN80150-S2NN-ND-P2	CXN80200-S2NN-ND-P2	CXN80250-S2NN-ND-P2	CXN80300-S2NN-ND-P2
			CXC80150-S2NN-ND-P2	CXC80200-S2NN-ND-P2	CXC80250-S2NN-ND-P2	CXC80300-S2NN-ND-P2
Mechanical specifications	Table size		80X80 mm			
	Travel stroke		150 mm	200 mm	250 mm	300 mm
	Drive type		Ball screw Ø8 lead 2mm			
	Rail		Circular Linear ball guiding			
	Stage material/Surface treatment		Stainless Steel / Nickel plating			
	Main unit weight		N：2.32 Kg / C：2.5 Kg	N：2.6 Kg / C：2.78 Kg	N：2.9 Kg / C：3.08 Kg	N：3.2 Kg / C：3.38 Kg
	Coupling		FAMCS10-5*5			
	Accuracy level		N：Standard grade			
	Wiring method		N：GMT Standard*2			
Precision specifications	Resolution (pulse)	Full / Half	10 μm / 5 μm			
	Maximum speed (full step)		40 mm / sec			
	Positioning precision		20 μm		30 μm	
	Repeatability precision		±1 μm			
	Load capacity		16 Kgf			
	Missed step		3 μm			
	Parallelism		20 μm			
	Dynamic straightness		5 μm			
	Dynamic parallelism		10 μm			
Electrical specifications	Motor	Type/Shaft numbers	2-phase stepper / □28 double shafts			
		Brand/ Model	GMT / 2MS-N28D45A			
	Driver brand/Model		GMT/GTR22G-D (Additional options)			
	Connector	Stage side connector	15-pin male end connector D-SUB			
		Controller side connector	15-pin female end connector D-SUB (optional)			
	Sensor	Origin sensor	Photoelectric sensor EE-SX498			
		Limit sensor				
		Power voltage	24V±10%			
		Control output	NPN open collector output under 24V 8mA			
		Output control	Testing (sensing): output transistor OFF (closed)			

*2 GMT Standard wiring is defined as the product photo, and not optional available.

X axis

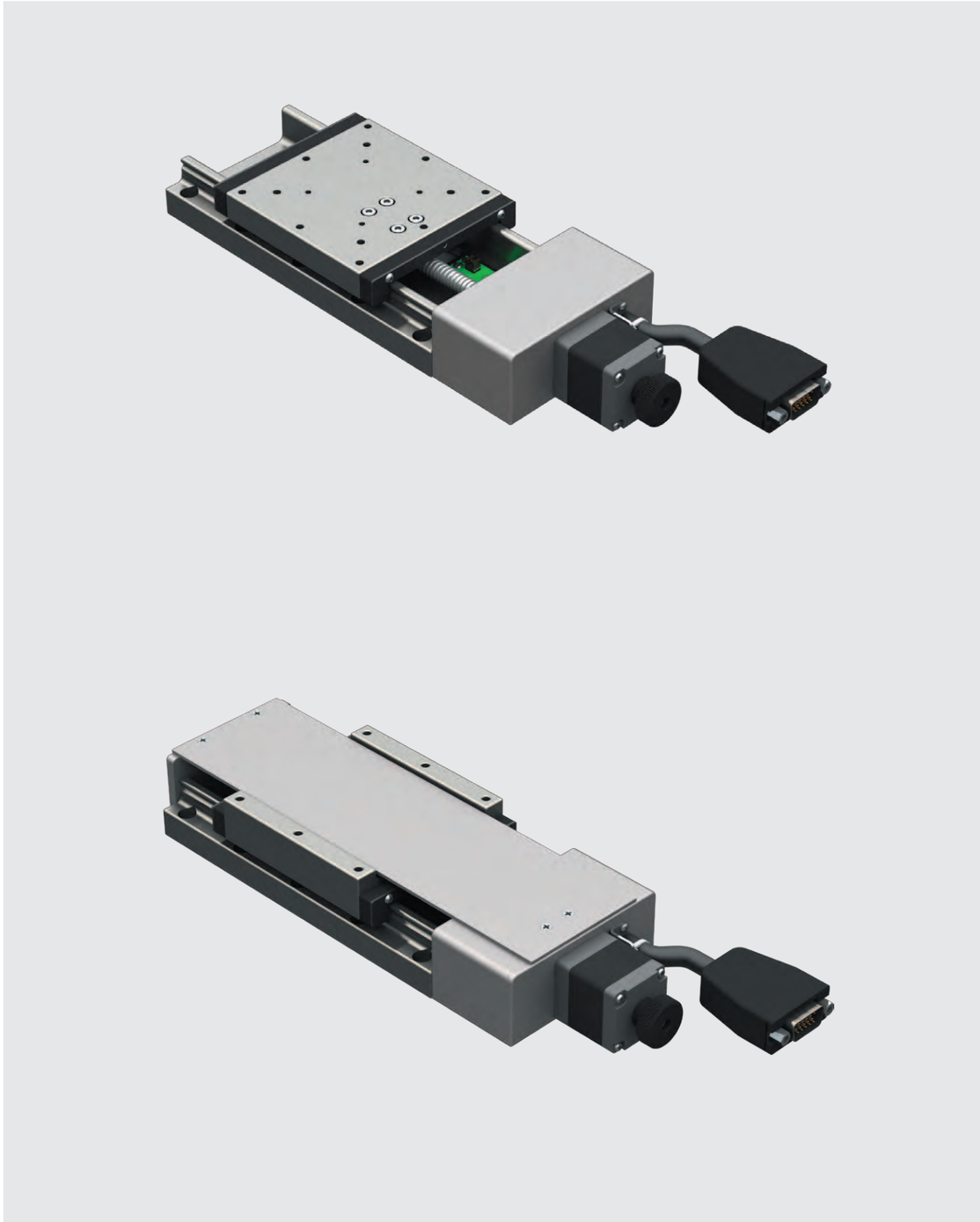

◎ Photos are CXN80100-S2NN-ND(UP) and CXC80100-S2NN-ND(DOWN).

CXN80□-S2NN-ND

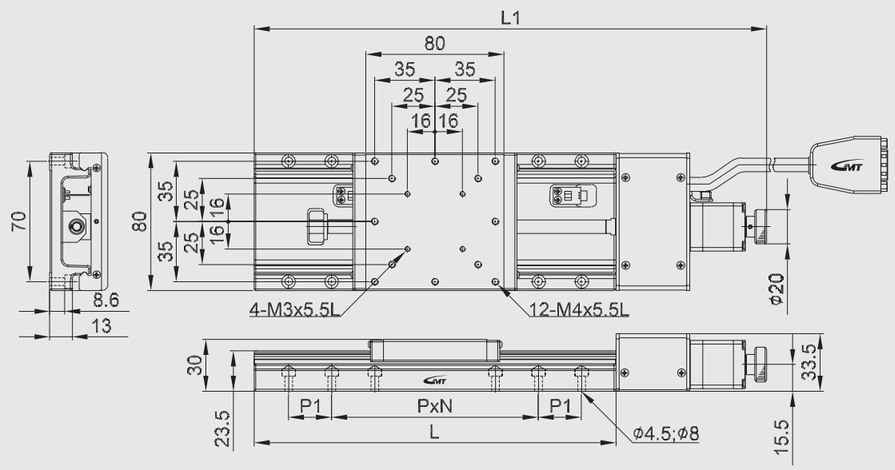

Stroke	L	L1	P	N	P1
150	260	367.5	70	3	N/A
200	310	417.5	70	3	35
250	360	467.5	70	4	35
300	410	517.5	70	5	N/A

CXC80□-S2NN-ND

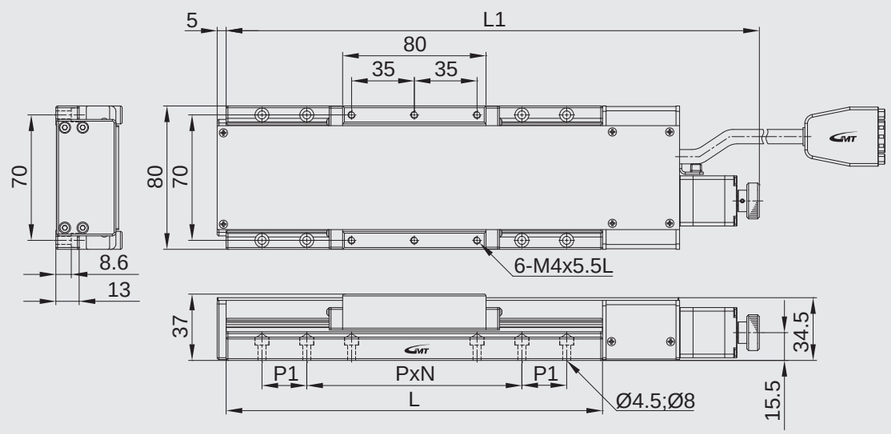

Stroke	L	L1	P	N	P1
150	260	367.5	70	3	N/A
200	310	417.5	70	3	35
250	360	467.5	70	4	35
300	410	517.5	70	5	N/A

Model description CYN50□/CYC50□-S series

Material	
S	Stainless Steel

Drive type	
2	Ball screw

Accuracy level	
N	Standard grade

Wiring method	
N	GMT Standard

Motor model	
N	2-phase stepper
X	Not equipped

Connector type	
D	D-SUB15 (VGA)

CYN 50 30 - S 2 N N - N D - P1 2 C

Axis & serial numbers	
CYN	XY axis (w/o cover)
CYC	XY axis (w/cover)

Table size	
50	50*50mm

Stroke	
30	30mm
50	50mm
75	75mm

Ball screw pitch	
P1	1mm
P2	2mm

Connecting cable (optional)	
Blank	Not equipped
2	2m cable*1
4	4m cable*1

*1 (D-SUB 15 pin female connector + the other side with discrete wirings)

Driver (optional)	
Blank	Not equipped
C	Standard specified by GMT

Model Number			CYN5030-S2NN-ND-P1	CYN5030-S2NN-ND-P2	CYN5050-S2NN-ND-P1	CYN5050-S2NN-ND-P2	CYN5075-S2NN-ND-P1	CYN5075-S2NN-ND-P2
			CYC5030-S2NN-ND-P1	CYC5030-S2NN-ND-P2	CYC5050-S2NN-ND-P1	CYC5050-S2NN-ND-P2	CYC5075-S2NN-ND-P1	CYC5075-S2NN-ND-P2
Mechanical specifications	Table size		50X50 mm					
	Travel stroke		30 mm		50 mm		75 mm	
	Drive type		Ball screw Ø8 lead 1mm	Ball screw Ø8 lead 2mm	Ball screw Ø8 lead 1mm	Ball screw Ø8 lead 2mm	Ball screw Ø8 lead 1mm	Ball screw Ø8 lead 2mm
	Rail		Circular Linear ball guiding					
	Stage material/Surface treatment		Stainless Steel / Nickel plating					
	Main unit weight		N：1.94 Kg / C：2.12 Kg		N：2.2 Kg / C：2.34 Kg		N：2.48 Kg / C：2.58 Kg	
	Coupling		FAMCS10-5*5					
	Accuracy level		N：Standard grade					
	Wiring method		N：GMT Standard*2					
Precision specifications	Resolution (pulse)	Full / Half	5 μm / 2.5 μm	10 μm / 5 μm	5 μm / 2.5 μm	10 μm / 5 μm	5 μm / 2.5 μm	10 μm / 5 μm
	Maximum speed (full step)		20 mm / sec	40 mm / sec	20 mm / sec	40 mm / sec	20 mm / sec	40 mm / sec
	Positioning precision		5 μm		15 μm			
	Repeatability precision		±1 μm					
	Load capacity		10 Kgf					
	Missed step		3 μm					
	Parallelism		15 μm					
	Dynamic straightness		3 μm					
	Dynamic parallelism		10 μm					
Electrical specifications	Motor	Type/Shaft numbers	2-phase stepper / □28 double shafts					
		Brand/ Model	GMT / 2MS-N28D32A					
	Driver brand/Model		GMT/GTR22G-D (Additional options)					
	Connector	Stage side connector	15-pin male end connector D-SUB					
		Controller side connector	15-pin female end connector D-SUB (optional)					
	Sensor	Origin sensor	Photoelectric sensor EE-SX4134					
		Limit sensor						
		Origin approximation sensor	N/A					
		Power voltage	24V±10%					
		Control output	NPN open collector output under 24V 8mA					
		Output control	Testing (sensing)：output transistor OFF (closed)					

*2 GMT Standard wiring is defined as the product photo, and not optional available.

XY axis

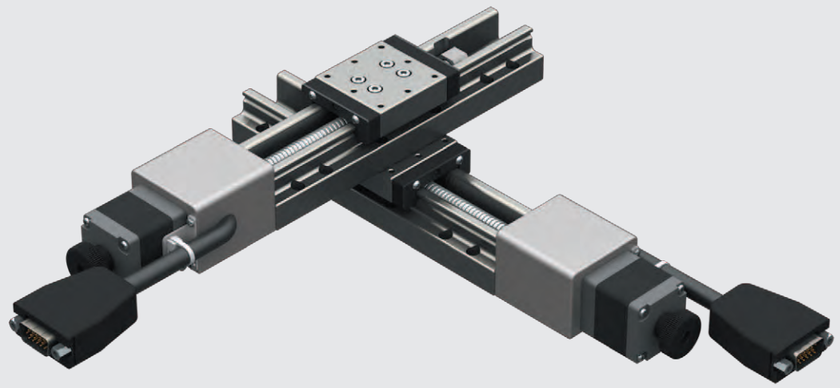

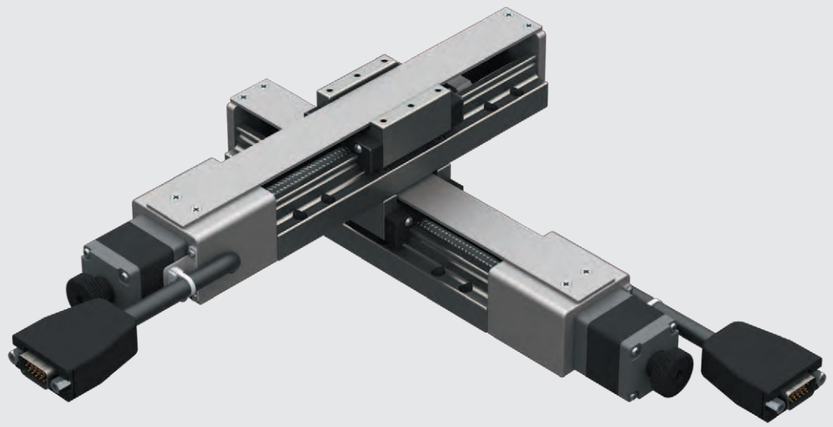

◎ Photos are CYN5030-S2NN-ND(UP) and CYC5030-S2NN-ND(DOWN).

CYN50□-S2NN-ND

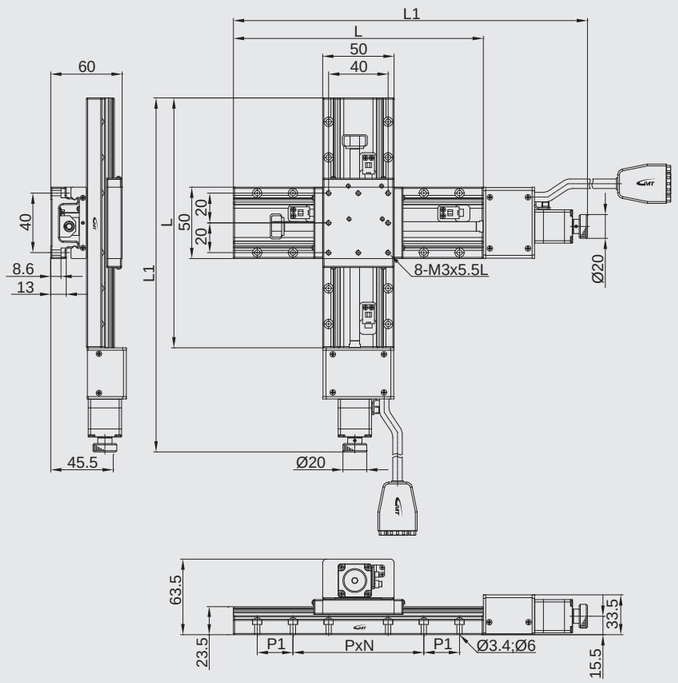

Stroke	L	L1	P	N	P1
30	110	197.5	40	1	20
50	120	217.5	40	3	N/A
75	145	242.5	40	3	N/A

CYC50□-S2NN-ND

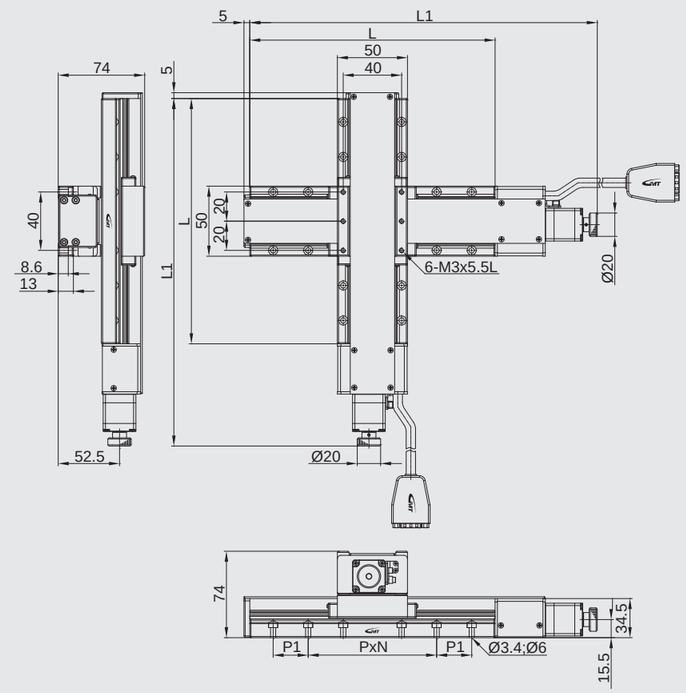

Stroke	L	L1	P	N	P1
30	110	197.5	40	1	20
50	120	217.5	40	3	N/A
75	145	242.5	40	3	N/A

Model description CYN60□/CYC60□-S series

Material	
S	Stainless Steel

Drive type	
2	Ball screw

Accuracy level	
N	Standard grade

Wiring method	
N	GMT Standard

Motor model	
N	2-phase stepper
X	Not equipped

Connector type	
D	D-SUB15 (VGA)

CYN 60 30 - S 2 N N - N D - P1 2 C

Axis & serial numbers	
CYN	XY axis (w/o cover)
CYC	XY axis (w/cover)

Table size	
60	60*60mm

Stroke	
30	30mm
50	50mm
75	75mm

Ball screw pitch	
P1	1mm
P2	2mm

Connecting cable (optional)	
Blank	Not equipped
2	2m cable*1
4	4m cable*1

Driver (optional)	
Blank	Not equipped
C	Standard specified by GMT

*1 (D-SUB 15 pin female connector + the other side with discrete wirings)

Model description			CYN6030-S2NN-ND-P1	CYN6030-S2NN-ND-P2	CYN6050-S2NN-ND-P1	CYN6050-S2NN-ND-P2	CYN6075-S2NN-ND-P1	CYN6075-S2NN-ND-P2
			CYC6030-S2NN-ND-P1	CYC6030-S2NN-ND-P2	CYC6050-S2NN-ND-P1	CYC6050-S2NN-ND-P2	CYC6075-S2NN-ND-P1	CYC6075-S2NN-ND-P2
Mechanical specifications	Table size		60X60 mm					
	Travel stroke		30 mm		50 mm		75 mm	
	Drive type		Ball screw Ø8 lead 1mm	Ball screw Ø8 lead 2mm	Ball screw Ø8 lead 1mm	Ball screw Ø8 lead 2mm	Ball screw Ø8 lead 1mm	Ball screw Ø8 lead 2mm
	Rail		Circular Linear ball guiding					
	Stage material/Surface treatment		Stainless Steel / Nickel plating					
	Main unit weight		N：2.2 Kg / C：2.58 Kg		N：2.38 Kg / C：2.66 Kg		N：2.6 Kg / C：2.88 Kg	
	Coupling		FAMCS10-5*5					
	Accuracy level		N：Standard grade					
	Wiring method		N：GMT Standard*2					
Precision specifications	Resolution (pulse)	Full / Half	5 μm / 2.5 μm	10 μm / 5 μm	5 μm / 2.5 μm	10 μm / 5 μm	5 μm / 2.5 μm	10 μm / 5 μm
	Maximum speed (full step)		20 mm / sec	40 mm / sec	20 mm / sec	40 mm / sec	20 mm / sec	40 mm / sec
	Positioning precision		10 μm				15 μm	
	Repeatability precision		±1 μm					
	Load capacity		12 Kgf					
	Missed step		3 μm					
	Parallelism		20 μm					
	Dynamic straightness		3 μm					
	Dynamic parallelism		10 μm					
Electrical specifications	Motor	Type/Shaft numbers	2-phase stepper / □28 double shafts					
		Brand/ Model	GMT / 2MS-N28D32A					
	Driver brand/Model		GMT/GTR22G-D (Additional options)					
	Connector	Stage side connector	15-pin male end connector D-SUB					
		Controller side connector	15-pin female end connector D-SUB (optional)					
	Sensor	Origin sensor	Photoelectric sensor EE-SX498					
		Limit sensor						
		Power voltage	24V±10%					
		Control output	NPN open collector output under 24V 8mA					
		Output control	Testing (sensing): output transistor OFF (closed)					

*2 GMT Standard wiring is defined as the product photo, and not optional available.

XY axis

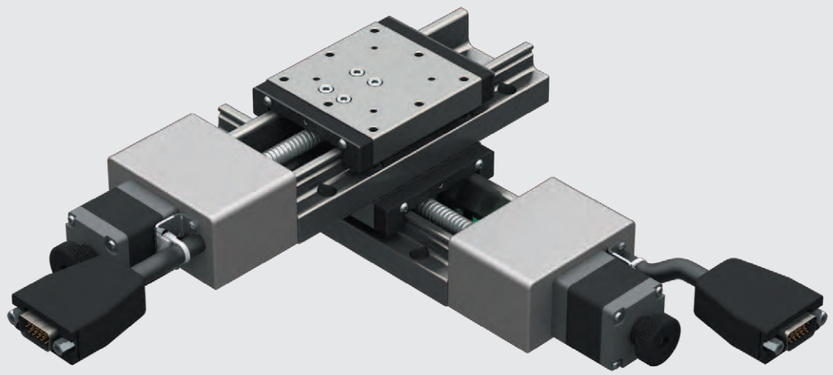

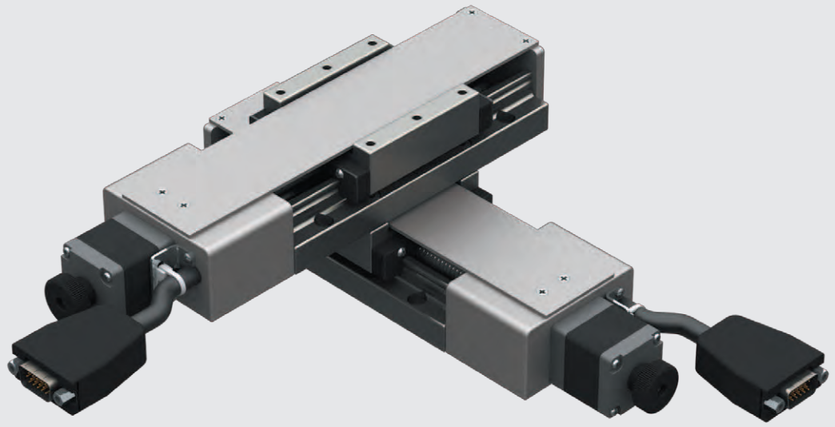

◎ Photos are CYN6075-S2NN-ND(UP) and CYC6075-S2NN-ND(DOWN).

CYN60□-S2NN-ND

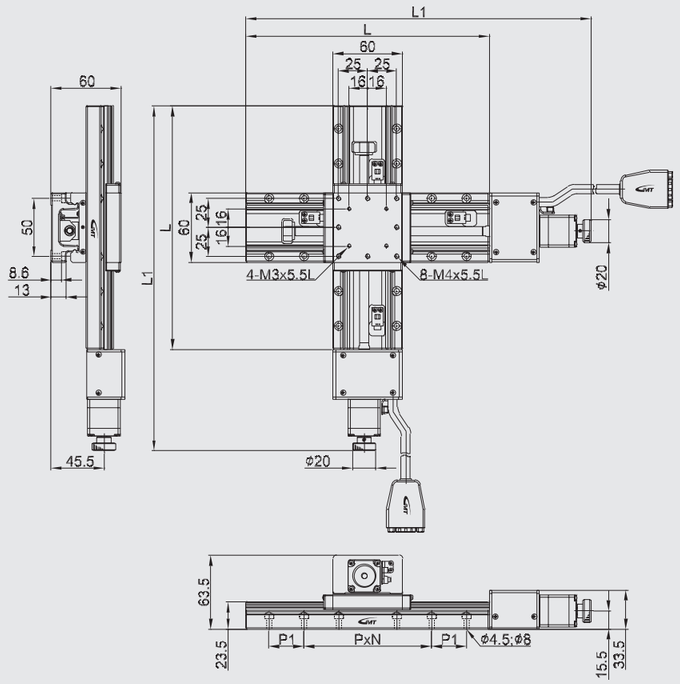

Stroke	L	L1	P	N	P1
30	120	209	50	1	25
50	140	229	50	1	25
75	165	254	50	3	N/A

CYC60□-S2NN-ND

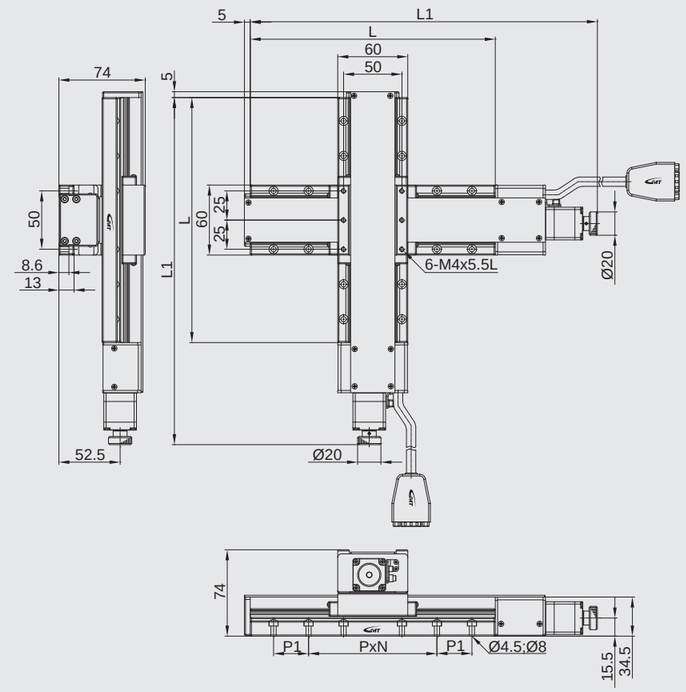

Stroke	L	L1	P	N	P1
30	120	209	50	1	25
50	140	229	50	1	25
75	165	254	50	3	N/A

Model description CYN80□/CYC80□-S series

Material	
S	Stainless Steel

Drive type	
2	Ball screw

Accuracy level	
N	Standard grade

Wiring method	
N	GMT Standard

Motor model	
N	2-phase stepper
X	Not equipped

Connector type	
D	D-SUB15 (VGA)

CYN 80 30 - S 2 N N - N D - P1 2 C

Axis & serial numbers	
CYN	XY axis (w/o cover)
CYC	XY axis (w/cover)

Table size	
80	80*80mm

Stroke	
30	30mm
50	50mm
75	75mm

Ball screw pitch	
P1	1mm
P2	2mm

Connecting cable (optional)	
Blank	Not equipped
2	2m cable*1
4	4m cable*1

*1 (D-SUB 15 pin female connector + the other side with discrete wirings)

Driver (optional)	
Blank	Not equipped
C	Standard specified by GMT

Model Number		CYN8030-S2NN-ND-P1 / CYC8030-S2NN-ND-P1	CYN8030-S2NN-ND-P2 / CYC8030-S2NN-ND-P2	CYN8050-S2NN-ND-P1 / CYC8050-S2NN-ND-P1	CYN8050-S2NN-ND-P2 / CYC8050-S2NN-ND-P2	CYN8075-S2NN-ND-P1 / CYC8075-S2NN-ND-P1	CYN8075-S2NN-ND-P2 / CYC8075-S2NN-ND-P2
Mechanical specifications	Table size	80X80 mm					
	Travel stroke	30 mm		50 mm		75 mm	
	Drive type	Ball screw Ø8 lead 1mm	Ball screw Ø8 lead 2mm	Ball screw Ø8 lead 1mm	Ball screw Ø8 lead 2mm	Ball screw Ø8 lead 1mm	Ball screw Ø8 lead 2mm
	Rail	Circular Linear ball guiding					
	Stage material/Surface treatment	Stainless Steel / Nickel plating					
	Main unit weight	N：3 Kg / C：3.58 Kg		N：3.36 Kg / C：3.72 Kg		N：3.68 Kg / C：4.06 Kg	
	Coupling	FAMCS10-5*5					
	Accuracy level	N：Standard grade					
	Wiring method	N：GMT Standard*2					
Precision specifications	Resolution (pulse) Full / Half	5 μm / 2.5 μm	10 μm / 5 μm	5 μm / 2.5 μm	10 μm / 5 μm	5 μm / 2.5 μm	10 μm / 5 μm
	Maximum speed (full step)	20 mm / sec	40 mm / sec	20 mm / sec	40 mm / sec	20 mm / sec	40 mm / sec
	Positioning precision	5 μm			15 μm		
	Repeatability precision	±1 μm					
	Load capacity	14 Kgf					
	Missed step	3 μm					
	Parallelism	20 μm					
	Dynamic straightness	3 μm					
	Dynamic parallelism	10 μm					
Electrical specifications	Motor: Type/Shaft numbers	2-phase stepper / □28 double shafts					
	Motor: Brand/ Model	GMT / 2MS-N28D32A					
	Driver brand/Model	GMT/GTR22G-D (Additional options)					
	Connector: Stage side connector	15-pin male end connector D-SUB					
	Connector: Controller side connector	15-pin female end connector D-SUB (optional)					
	Sensor: Origin sensor	Photoelectric sensor EE-SX4134					
	Sensor: Limit sensor						
	Sensor: Origin approximation sensor	N/A					
	Sensor: Power voltage	24V±10%					
	Sensor: Control output	NPN open collector output under 24V 8mA					
	Sensor: Output control	Testing (sensing)：output transistor OFF (closed)					

*2 GMT Standard wiring is defined as the product photo, and not optional available.

Y axis

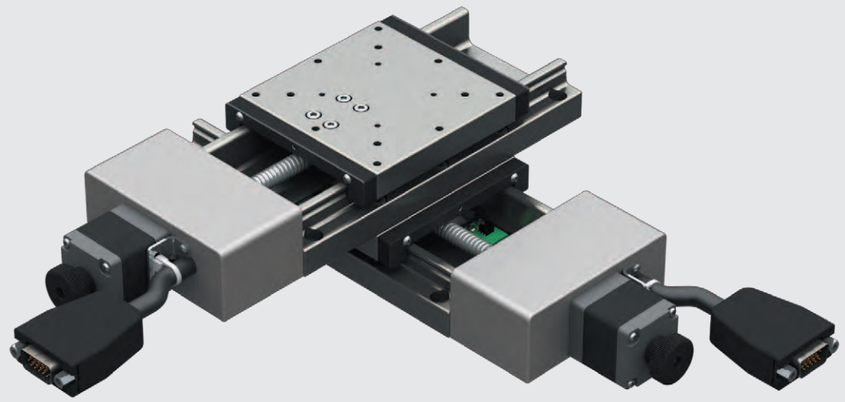

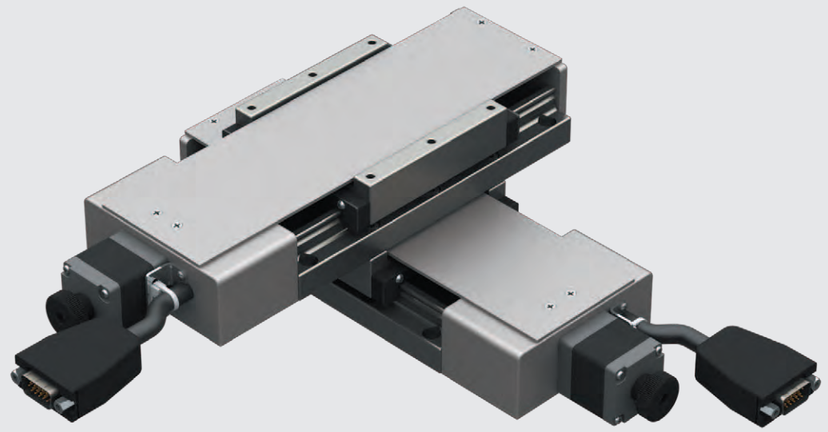

◎ Photos are CYN6075-S2NN-ND(UP) and CYC6075-S2NN-ND(DOWN).

CYN80□-S2NN-ND

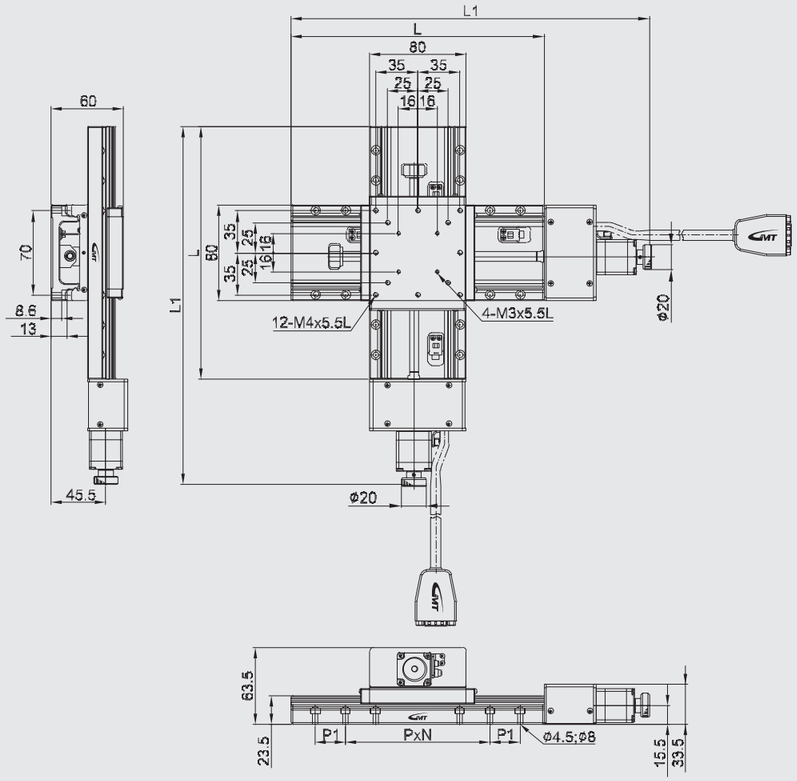

Stroke	L	L1	P	N	P1
30	140	229	70	1	25
50	160	247.5	35	4	35
75	185	272.5	35	4	35

CYC80□-S2NN-ND

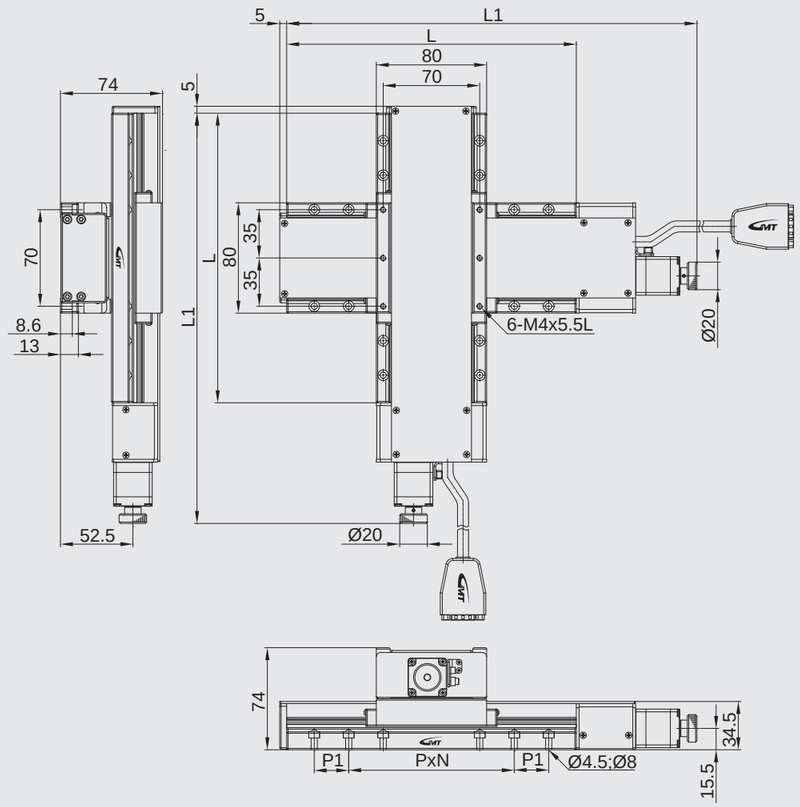

Stroke	L	L1	P	N	P1
30	140	229	70	1	25
50	160	247.5	35	4	35
75	185	272.5	35	4	35

Model description

AZV-F series

Material	
S	Steel

Drive type	
2	Belt & Ball screw

Accuracy level	
N	Standard grade

Wiring method	
N	GMT Standard

Motor model	
N	2-phase stepper
X	Not equipped

Connector type	
D	D-SUB15 (VGA)

AZV 40 06 - F 8 N N - N D - 2 C

Axis & serial numbers	
AZV	Z axis

Table size	
40	40*40mm
60	60*60mm
80	80*80mm

Travel stroke	
06	06mm
08	08mm
10	10mm

Connecting cable (optional)	
Blank	Not equipped
2	2m cable*1
4	4m cable*1

*1 (D-SUB 15 pin female connector + the other side with discrete wirings)

Driver (optional)	
Blank	Not equipped
C	Standard specified by GMT

Model description			AZV4006-F8NN-ND	AZV6008-F8NN-ND	AZV8010-F8NN-ND
Mechanical specifications	Table size		40X40 mm	60X60 mm	80X80 mm
	Travel stroke		6 mm	8 mm	10 mm
	Drive type		Belt & Ball screw Ø8 lead 1mm		
	Rail		Linear ball guiding		
	Stage material/Surface treatment		Steel / Nickel plating		
	Main unit weight		0.6 Kg	1.0 Kg	1.5 Kg
	Coupling		N / A		
	Accuracy level		N：Standard grade		
	Wiring method		N：GMT Standard*2		
Precision specifications	Resolution (pulse)	Full / Half	5 μm / 2.5 μm	2.5 μm / 1.25 μm	
	Maximum speed (full step)		12 mm / sec	6 mm / sec	
	Positioning precision		30 μm		
	Repeatability precision		±5 μm		
	Load capacity		3 Kgf	5 Kgf	
	Missed step		5 μm		
	Parallelism		50 μm		
	Dynamic straightness		4 μm		
	Dynamic parallelism		20 μm		
Electrical specifications	Motor	Type/Shaft numbers	2-phase stepper / □28 double shafts		
		Brand/ Model	GMT / 2MS-N28D32A		
	Driver brand/Model		GMT/GTR22G-D (Additional options)		
	Connector	Stage side connector	15-pin male end connector D-SUB		
		Controller side connector	15-pin female end connector D-SUB (optional)		
	Sensor	Origin sensor	Photoelectric sensor EE-SX498		
		Limit sensor			
		Power voltage	24V±10%		
		Control output	NPN open collector output under 24V 8mA		
		Output control	Testing (sensing): output transistor OFF (closed)		

*2 GMT Standard wiring is defined as the product photo, and not optional available.

Z axis

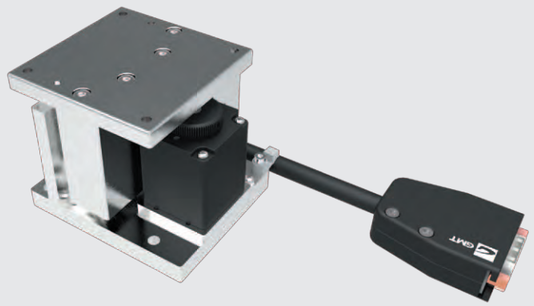

AZV4006-F8NN-ND

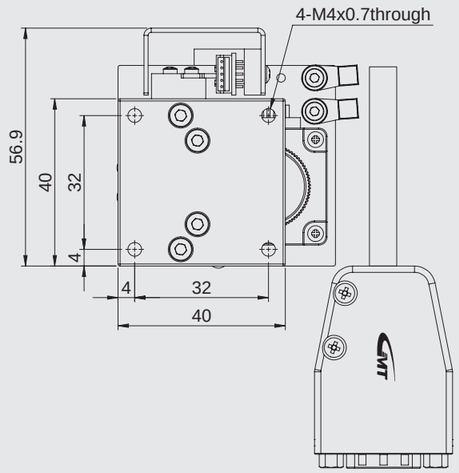

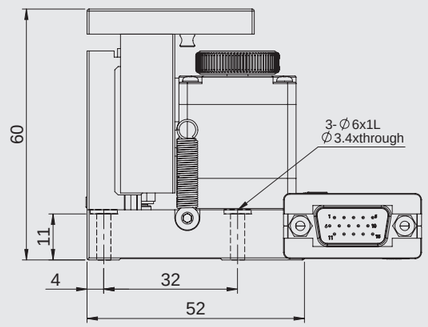

◎ Photo is AZV6008-F8NN-ND ◦

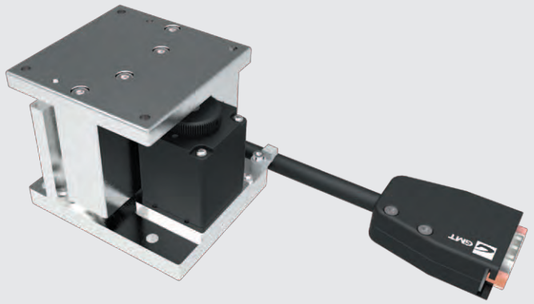

AZV6008-F8NN-ND

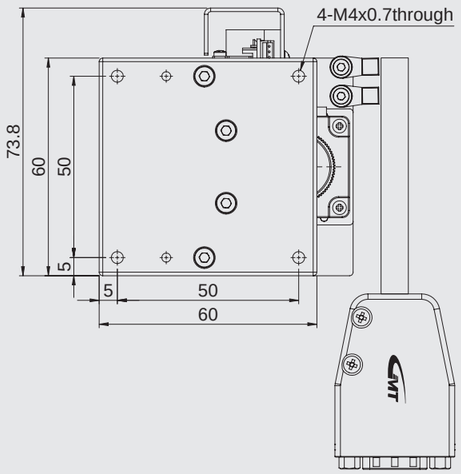

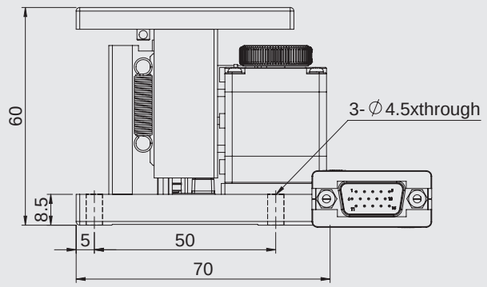

◎ Photo is AZV6008-F8NN-ND。

Standard Motorized Z axis Elevator Stage ▶ **Linear ball guiding**
AZV-F series
GMT GLOBAL INC.
AZV-F series

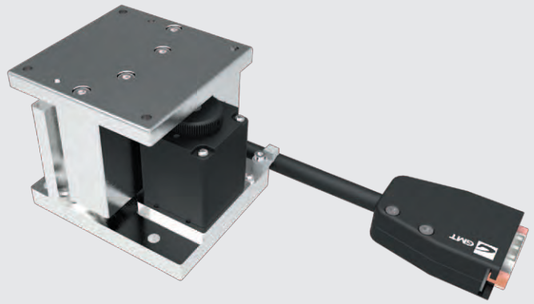

AZV8010-F8NN-ND

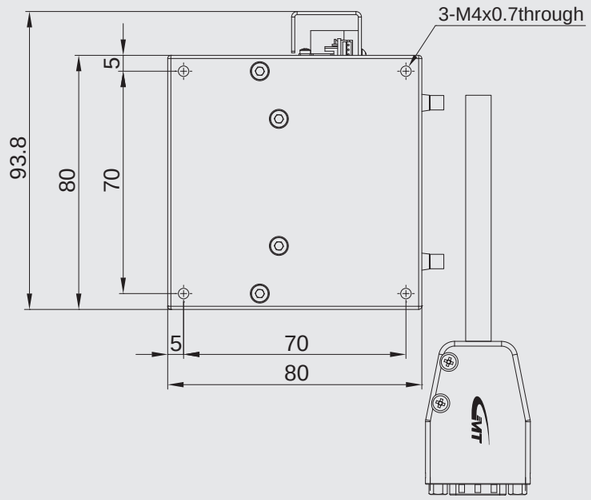

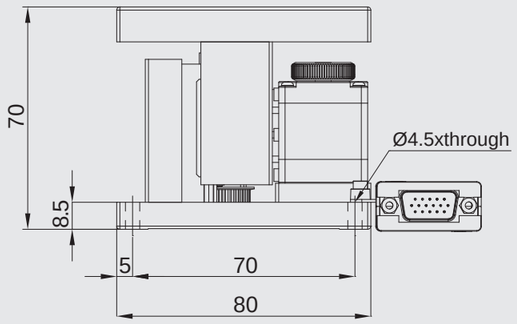

◎ Photo is AZV6008-F8NN-ND。

Model description

AXG6 series

Material / Guiding	
CSW	Brass alloy / Dovetail guiding

Drive type	
3	Warm & warm gear

Accuracy level	
N	Standard grade

Wiring method	
R	Right wiring
L	Left wiring

Motor model	
N	2-phase stepper
X	Not equipped

Connector type	
D	D-SUB15 (VGA)

AXG 6 - 80 CSW - 3 N R - N D - 2 C

Axis & serial numbers	
AXG	α axis

Table size	
60	60*60mm

Travel stroke	
35	35mm
60	60mm
80	80mm

Connecting cable (optional)	
Blank	Not equipped
2	2m cable*1
4	4m cable*1

*1 (D-SUB 15 pin female connector + the other side with discrete wirings)

Driver (optional)	
Blank	Not equipped
C	Standard specified by GMT

Model description			AXG6-35CSW-3NR-ND	AXG6-60CSW-3NR-ND	AXG6-80CSW-3NR-ND
			AXG6-35CSW-3NL-ND	AXG6-60CSW-3NL-ND	AXG6-80CSW-3NL-ND
Mechanical specifications	Table size		60x60 mm		
	Travel stroke		±12°	±10°	±7°
	Drive type		Warm & warm gear (ratio1 / 188)	Warm & warm gear (ratio1 / 276)	Warm & warm gear (ratio1 / 356)
	Rail		Dovetail slide		
	Stage material/Surface treatment		Brass alloy / Black fluororesin		
	Main unit weight		0.8 Kg		
	Coupling		FAMML16-4*5		
	Accuracy level		N：Standard grade		
	Wiring method		R：Right wiring (Inventory specification) / L：Left wiring		
Precision specifications	Resolution (pulse)	Full / Half	≒0.0095° / ≒0.0047°	≒0.0065° / ≒0.0032°	≒0.005° / ≒0.0025°
	Maximum speed (full step)		15° / sec	7.5° / sec	7° / sec
	Positioning precision		0.2°		
	Repeatability precision		±0.05°		
	Load capacity		6 Kgf		
	Missed step		0.1°		
	Parallelism		50 μm		
	Dynamic straightness		±0.4 mm		
	Dynamic parallelism		0.02 mm		
Electrical specifications	Motor	Type/Shaft numbers	2-phase stepper / □28 double shafts		
		Brand/ Model	GMT / 2MS-N35D36A		
	Driver brand/Model		GMT/GTR22G-D (Additional options)		
	Connector	Stage side connector	15-pin male end connector D-SUB		
		Controller side connector	15-pin female end connector D-SUB (optional)		
	Sensor	Origin sensor	Photoelectric sensor EE-SX498		
		Limit sensor			
		Power voltage	24V±10%		
		Control output	NPN open collector output under 24V 8mA		
		Output control	Testing (sensing): output transistor OFF (closed)		

α axis

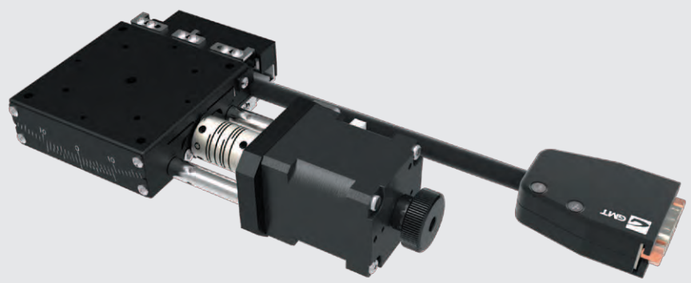

AXG6-35CSW-3NR-ND

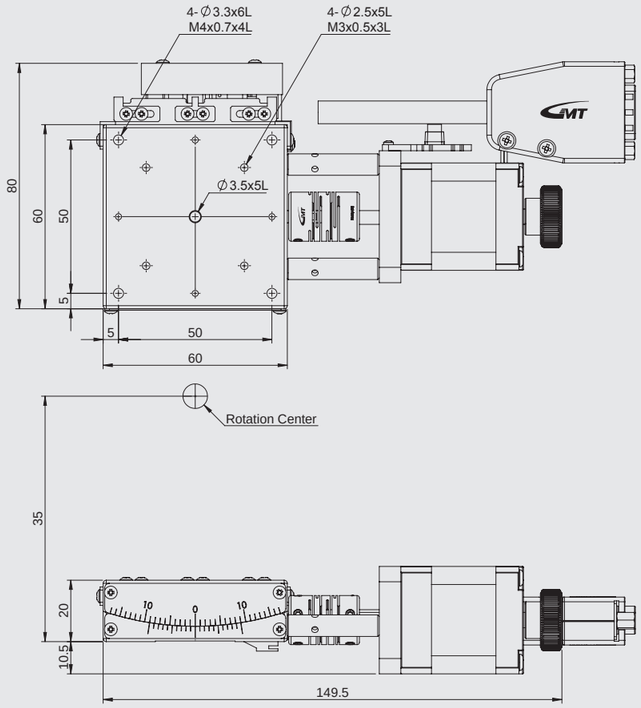

◎ Photo is AXG6-80CSW-3NR-ND。

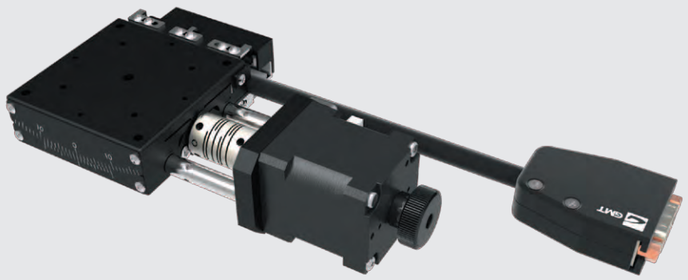

AXG6-60CSW-3NR-ND

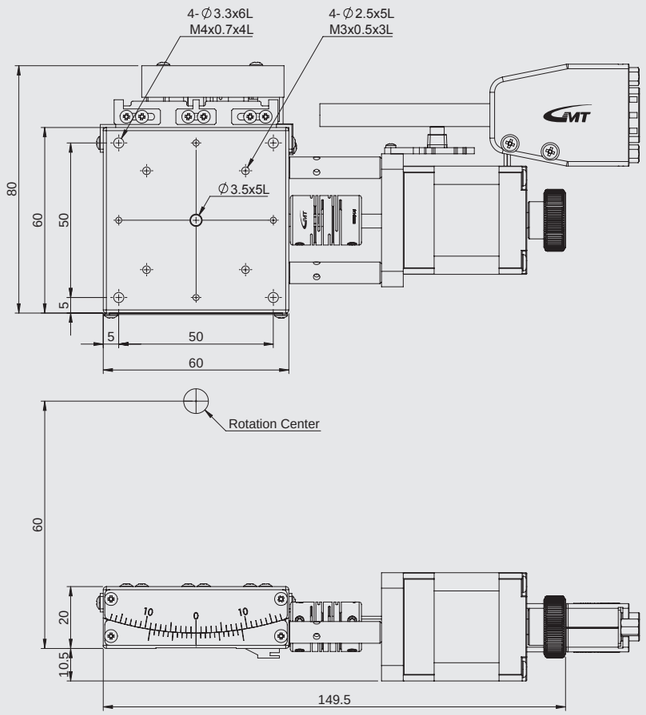

◎ Photo is AXG6-80CSW-3NR-ND.

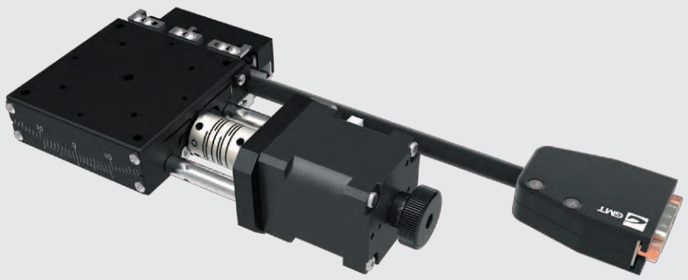

AXG6-80CSW-3NR-ND

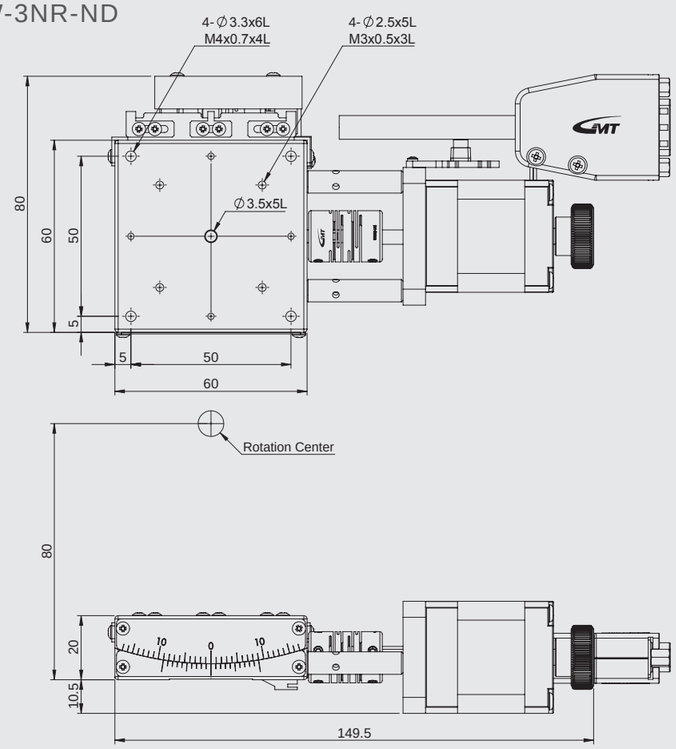

◎ Photo is AXG6-80CSW-3NR-ND.

AR series

Model description

Material	
A	Aluminum alloy

Drive type	
3	Warm & warm gear

Accuracy level	
N	Standard grade

Wiring method	
N	GMT Standard

Motor model	
N	2-phase stepper
X	Not equipped

Connector type	
D	D-SUB15 (VGA)

AR 39 - A 3 N N - N D - 2 C

Axis & serial numbers	
AR	θ axis

Table size	
39	ø39mm
59	ø59mm
80	ø80mm
100	ø100mm

Connecting cable (optional)	
Blank	Not equipped
2	2m cable*1
4	4m cable*1

*1 (D-SUB 15 pin female connector + the other side with discrete wirings)

Driver (optional)	
Blank	Not equipped
C	Standard specified by GMT

Model description			AR39-A3NN-ND	AR59-A3NN-ND	AR80-A3NN-ND	AR100-A3NN-ND
Mechanical specifications	Table size		ø39 mm	ø59 mm	ø80 mm	ø100 mm
	Travel stroke		360°			
	Drive type		Warm & warm gear (ratio 1 / 120)	Warm & warm gear (ratio 1 / 180)		Warm & warm gear (ratio 1 / 144)
	Rail		Deep groove ball bearing			Crossed-roller bearing
	Stage material/Surface treatment		Aluminum alloy / Black anodized			
	Main unit weight		0.4 Kg	0.6 Kg	0.8 Kg	1.2 Kg
	Coupling		FSMMS12-5*6		FSMMS12-5*5	FSMMS12-5*5
	Accuracy level		N：Standard grade			
	Wiring method		N：GMT Standard*2			
Precision specifications	Resolution (pulse)	Full / Half	0.015° / 0.0075°	0.01° / 0.005°		0.0125° / 0.00625°
	Maximum speed (full step)		25° / sec	15° / sec		25° / sec
	Positioning precision		0.1°			
	Repeatability precision		±0.05°			
	Load capacity		4 Kgf			20 Kgf
	Missed step		0.1°			
	Parallelism		50 μm			
	Dynamic straightness		3 μm			
	Dynamic parallelism		30 μm			
Electrical specifications	Motor	Type/Shaft numbers	2-phase stepper / □28 double shafts			2-phase stepper / □35 double shafts
		Brand/ Model	GMT / 2MS-N28D32A			GMT / 2MS-N35D36A
	Driver brand/Model		GMT/GTR22G-D (Additional options)			
	Connector	Stage side connector	15-pin male end connector D-SUB			
		Controller side connector	15-pin female end connector D-SUB (optional)			
	Sensor	Origin sensor	Photoelectric sensor EE-SX498			
		Limit sensor				
		Power voltage	24V±10%			
		Control output	NPN open collector output under 24V 8mA			
		Output control	Testing (sensing): output transistor OFF (closed)			

*2 GMT Standard wiring is defined as the product photo, and not optional available.

θ axis

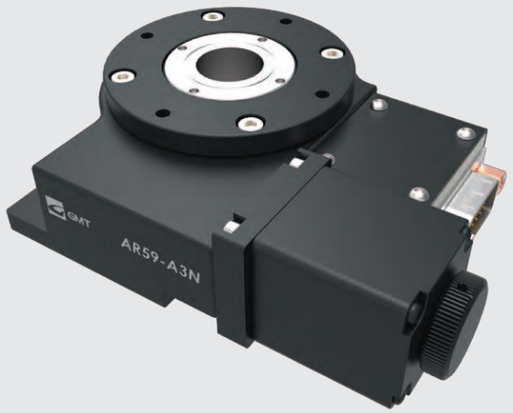

AR39-A3NN-ND

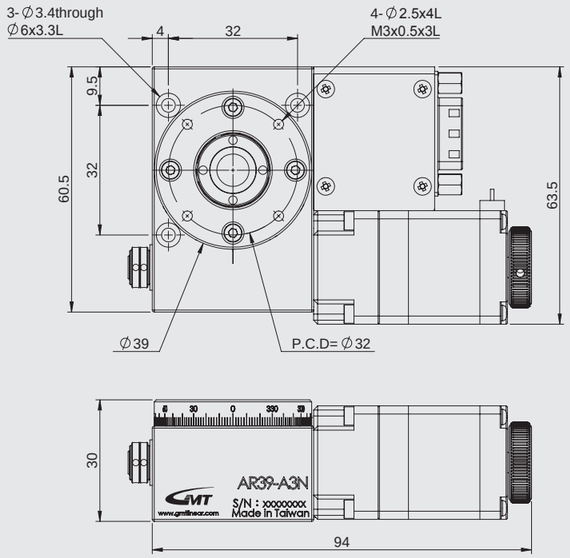

◎ Photo is AR100-A3NN-ND。

AR59-A3NN-ND

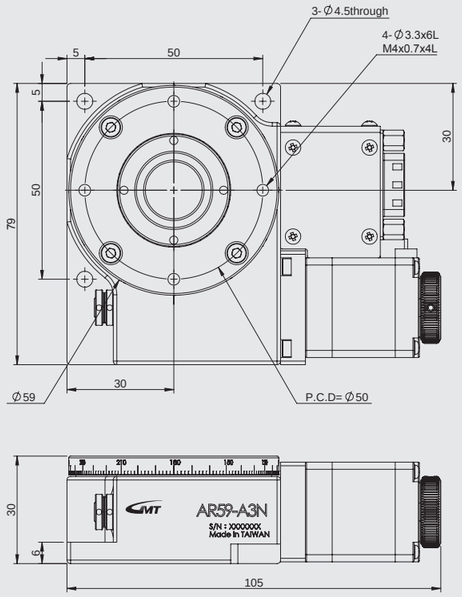

AR80-A3NN-ND

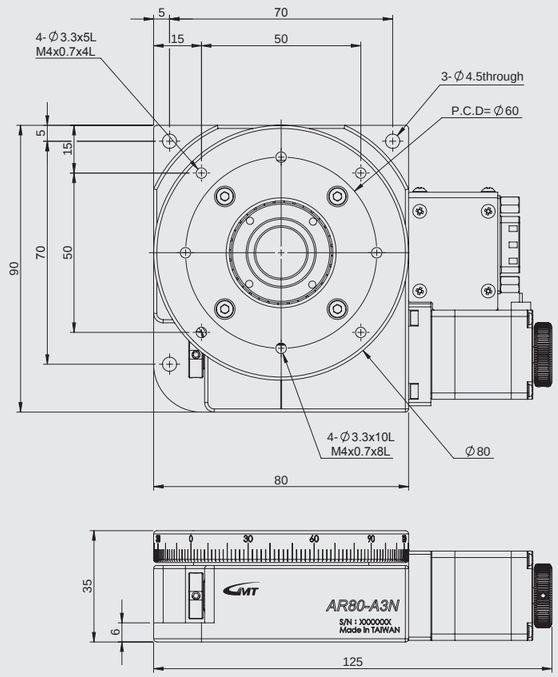

AR100-A3NN-ND

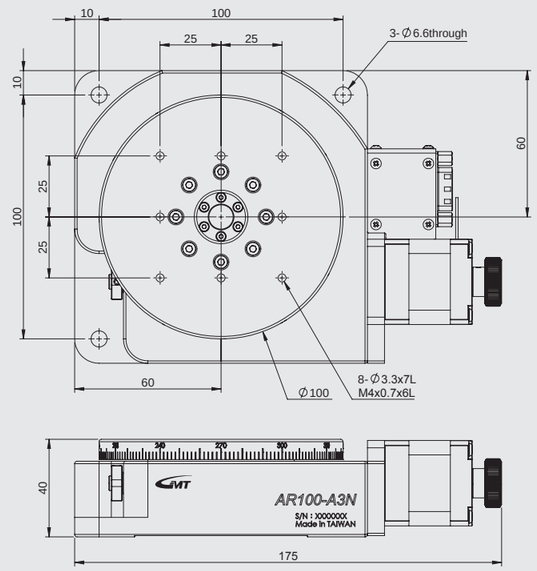

AX-A series

Model description

Material	
A	Aluminum alloy

Drive type	
1	V-Teeth lead screw

Accuracy level	
V	Standard grade

Wiring method	
R	Right wiring
L	Left wiring

Motor model	
N	2-phase stepper
X	Not equipped

Connector type	
D	D-SUB15 (VGA)

AX 40 - A 1 V R - N D - 2 C

Axis & serial numbers	
AX	X axis

Table size	
40	40*40mm
60	60*60mm
80	80*80mm
100	100*100mm
120	120*120mm

Connecting cable (optional)	
Blank	Not equipped
2	2m cable*1
4	4m cable*1

*1 (D-SUB 15 pin female connector + the other side with discrete wirings)

Driver (optional)	
Blank	Not equipped
C	Standard specified by GMT

Model description			AX40-A1VR-ND	AX60-A1VR-ND	AX80-A1VR-ND	AX100-A1VR-ND	AX120-A1VR-ND
			AX40-A1VL-ND	AX60-A1VL-ND	AX80-A1VL-ND	AX100-A1VL-ND	AX120-A1VL-ND
Mechanical specifications	Table size		40X40 mm	60X60 mm	80X80 mm	100X100 mm	120X120 mm
	Travel stroke		15 mm	20 mm	30 mm	40 mm	70 mm
	Drive type		V-Teeth lead screw Ø6 lead 1mm		V-Teeth lead screw Ø8 lead 1mm		
	Rail		Crossed-roller guiding				
	Stage material/Surface treatment		Aluminum alloy / Black anodized				
	Main unit weight		0.37 Kg	0.64 Kg	1.2 Kg	1.65 Kg	2.6 Kg
	Coupling		FAMMS12-3*5	FAMS16-5*5	FAMMS16-5*5		
	Accuracy level		V：Standard grade				
	Wiring method		R：Right wiring (Inventory specification) / L：Left wiring				
Precision specifications	Resolution (pulse)	Full / Half	5 μm / 2.5 μm				
	Maximum speed (full step)		5 mm / sec				
	Positioning precision		25 μm				
	Repeatability precision		±2 μm				
	Load capacity		6 Kgf		21 Kgf	23 Kgf	25 Kgf
	Missed step		2 μm				
	Parallelism		30 μm				
	Dynamic straightness		3 μm				
	Dynamic parallelism		6.6 μm		15 μm		
Electrical specifications	Motor	Type/Shaft numbers	2-phase stepper / ☐28 double shafts		2-phase stepper / ☐42 double shafts		
		Brand/ Model	GMT / 2MS-N28D32A		GMT / 2MS-N42D47A		
	Driver brand/Model		GMT / DS2-022A (Additional options)		GMT / DS2-032A (Additional options)		
	Connector	Stage side connector	15-pin male end connector D-SUB				
		Controller side connector	15-pin female end connector D-SUB (optional)				
	Sensor	Origin sensor	Photoelectric sensor EE-SX498				
		Limit sensor					
		Power voltage	24V±10%				
		Control output	NPN open collector output under 24V 8mA				
		Output control	Testing (sensing): output transistor OFF (closed)				

X axis

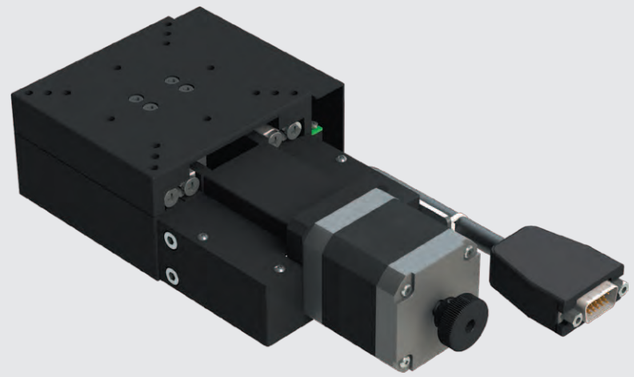

AX40-A1VR-ND

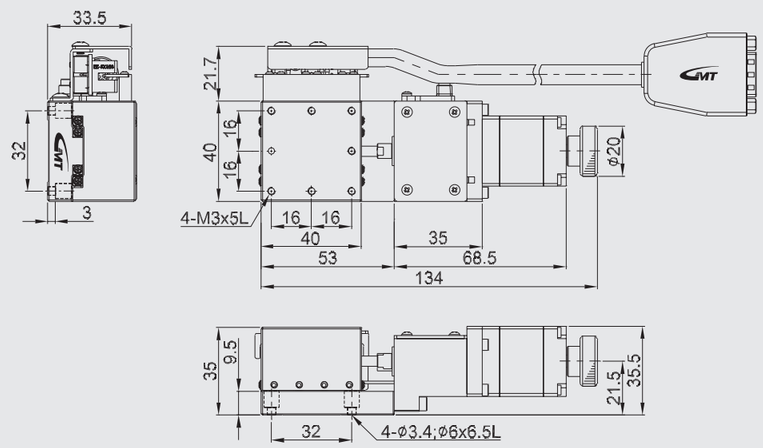

◎ Photo is AX80-A1VR-ND。

AX60-A1VR-ND

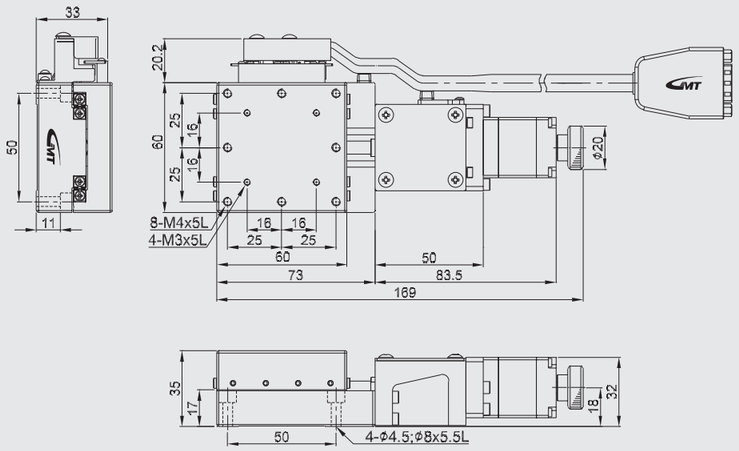

AX80-A1VR-ND

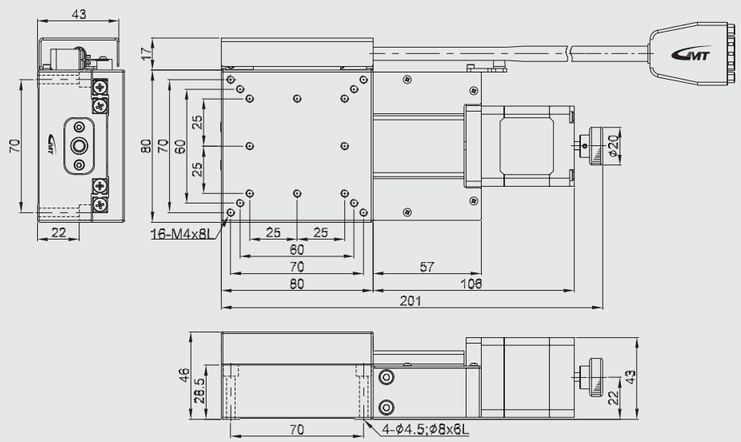

AX100-A1VR-ND

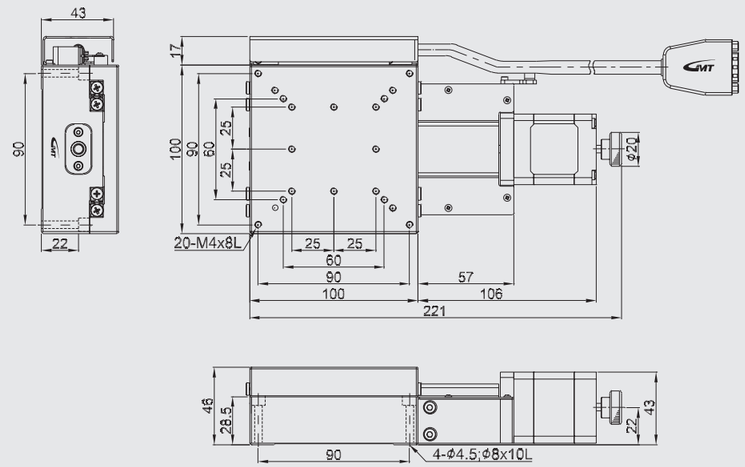

AX120-A1VR-ND

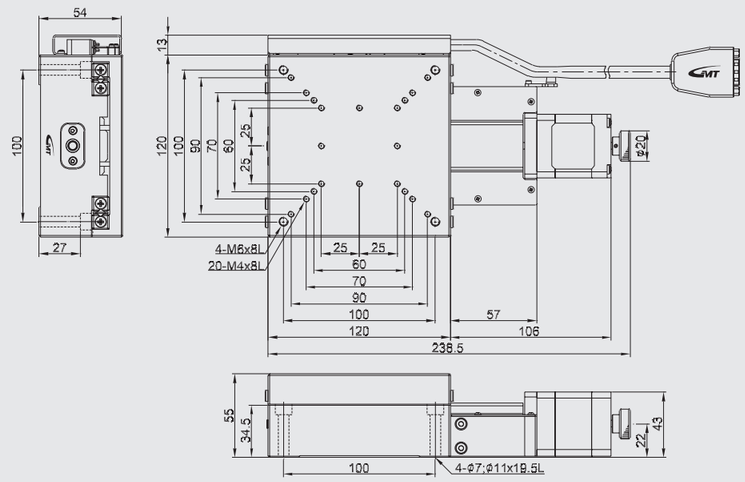

AY-A series

Model description

Material	
A	Aluminum alloy

Drive type	
1	V-Teeth lead screw

Accuracy level	
V	Standard grade

Wiring method	
R	Right wiring
L	Left wiring

Motor model	
N	2-phase stepper
X	Not equipped

Connector type	
D	D-SUB15 (VGA)

AY 40 - A 1 V R - N D - 2 C

Axis & serial numbers	
AY	XY axis

Table size	
40	40*40mm
60	60*60mm
80	80*80mm
100	100*100mm
120	120*120mm

Connecting cable (optional)	
Blank	Not equipped
2	2m cable*1
4	4m cable*1

*1 (D-SUB 15 pin female connector + the other side with discrete wirings)

Driver (optional)	
Blank	Not equipped
C	Standard specified by GMT

Model description		AY40-A1VR-ND	AY60-A1VR-ND	AY80-A1VR-ND	AY100-A1VR-ND	AY120-A1VR-ND
		AY40-A1VL-ND	AY60-A1VL-ND	AY80-A1VL-ND	AY100-A1VL-ND	AY120-A1VL-ND
Mechanical specifications	Table size	40X40 mm	60X60 mm	80X80 mm	100X100 mm	120X120 mm
	Travel stroke	15 mm	20 mm	30 mm	40 mm	70 mm
	Drive type	V-Teeth lead screw Ø6 lead 1mm		V-Teeth lead screw Ø8 lead 1mm		
	Rail	Crossed-roller guiding				
	Stage material/Surface treatment	Aluminum alloy / Black anodized				
	Main unit weight	0.76 Kg	1.38 Kg	2.42 Kg	3.3 Kg	5.24 Kg
	Coupling	FAMMS12-3*5	FAMS16-5*5	FAMMS16-5*5		
	Accuracy level	V：Standard grade				
	Wiring method	R：Right wiring (Inventory specification) / L：Left wiring				
Precision specifications	Resolution (pulse) Full / Half	5 μm / 2.5 μm				
	Maximum speed (full step)	5 mm / sec				
	Positioning precision	25 μm				
	Repeatability precision	±2 μm				
	Load capacity	5 Kgf		19 Kgf	21 Kgf	22 Kgf
	Missed step	2 μm				
	Parallelism	30 μm				
	Dynamic straightness	3 μm				
	Dynamic parallelism	6.6 μm		15 μm		
Electrical specifications	Motor: Type/Shaft numbers	2-phase stepper / □28 double shafts		2-phase stepper / □42 double shafts		
	Motor: Brand/ Model	GMT / 2MS-N28D32A		GMT / 2MS-N42D47A		
	Driver brand/Model	GMT / DS2-022A (Additional options)		GMT / DS2-032A (Additional options)		
	Connector: Stage side connector	15-pin male end connector D-SUB				
	Connector: Controller side connector	15-pin female end connector D-SUB (optional)				
	Sensor: Origin sensor / Limit sensor	Photoelectric sensor EE-SX498				
	Sensor: Power voltage	24V±10%				
	Sensor: Control output	NPN open collector output under 24V 8mA				
	Sensor: Output control	Testing (sensing): output transistor OFF (closed)				

XY axis

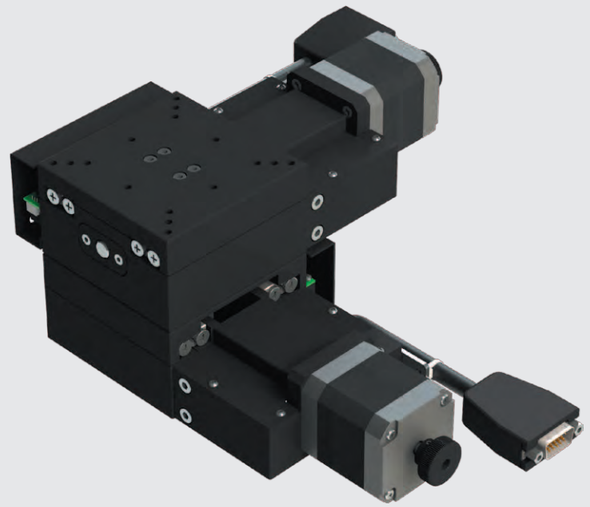

AY40-A1VR-ND

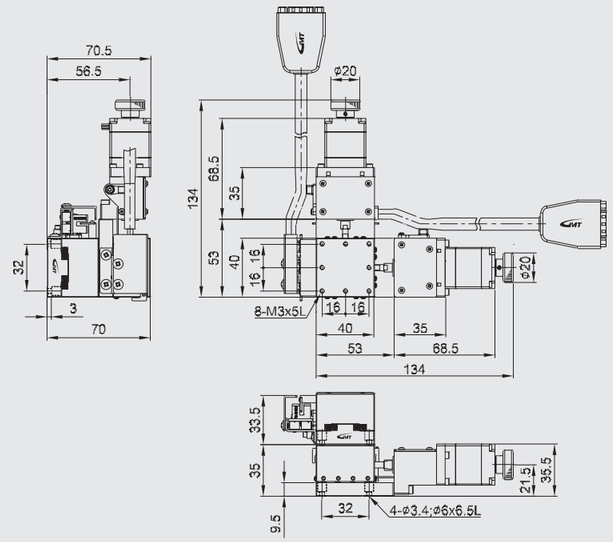

◎ Photo is AY80-A1VR-ND。

AY60-A1VR-ND

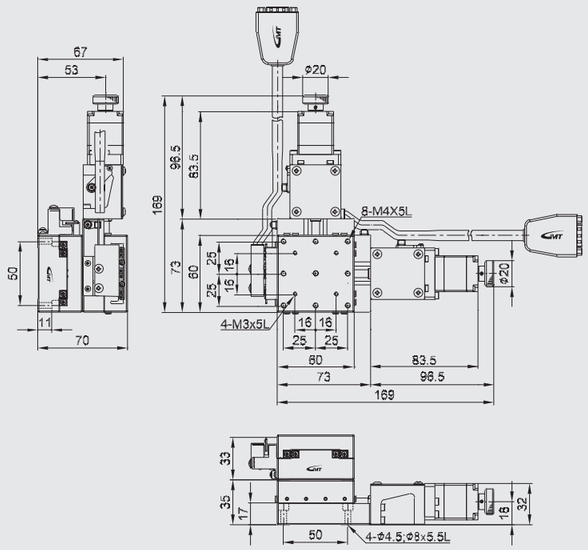

AY80-A1VR-ND

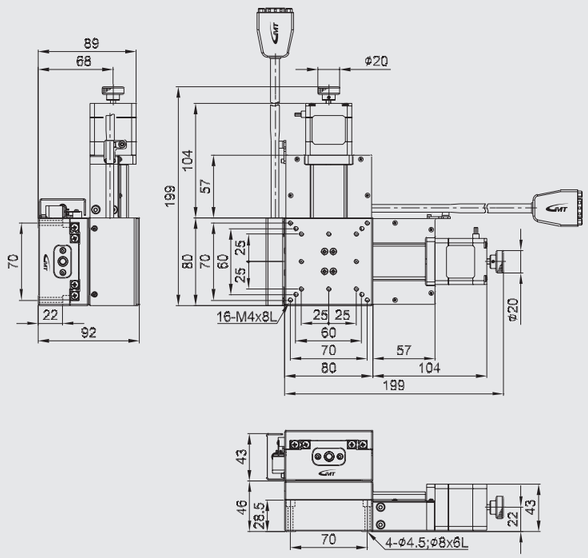

AY100-A1VR-ND

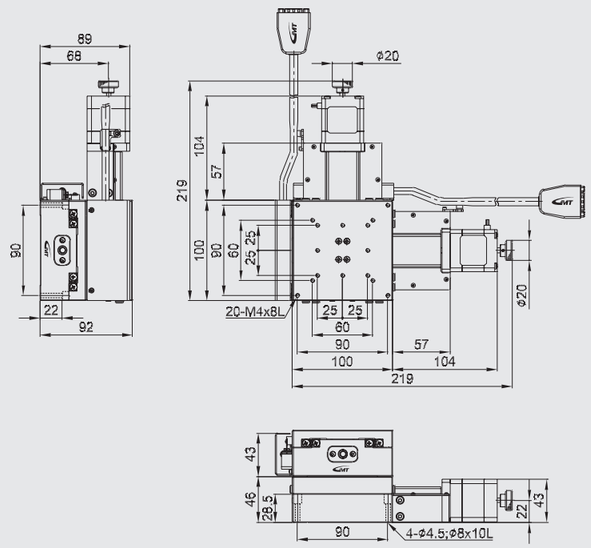

AY120-A1VR-ND

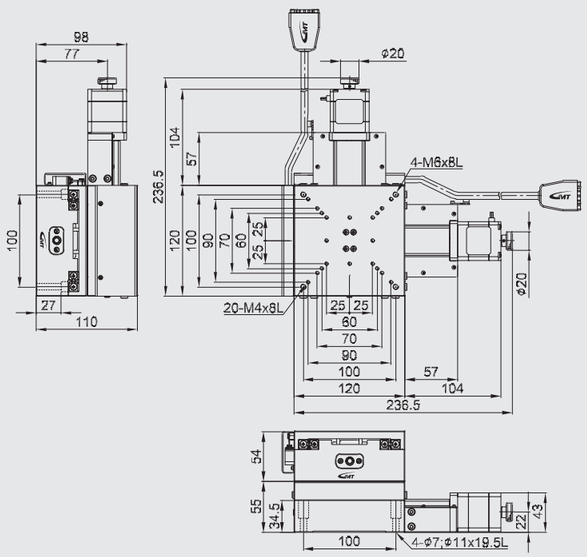

AX-F series

Model description

Material		Drive type		Accuracy level		Wiring method		Motor model		Connector type	
A	Steel	1	V-Teeth lead screw	V	Standard grade	R	Right wiring	N	2-phase stepper	D	D-SUB15 (VGA)
						L	Left wiring	X	Not equipped		

AX 40 - F 1 V R - N D - 2 C

Axis & serial numbers	
AX	X axis

Table size	
40	40*40mm
60	60*60mm
80	80*80mm

Connecting cable (optional)	
Blank	Not equipped
2	2m cable*1
4	4m cable*1

*1 (D-SUB 15 pin female connector + the other side with discrete wirings)

Driver (optional)	
Blank	Not equipped
C	Standard specified by GMT

Model description			AX40-F1VR-ND	AX60-F1VR-ND	AX80-F1VR-ND
			AX40-F1VL-ND	AX60-F1VL-ND	AX80-F1VL-ND
Mechanical specifications	Table size		40X40 mm	60X60 mm	80X80 mm
	Travel stroke			15 mm	
	Drive type		V-Teeth lead screw Ø6 lead 1mm		
	Rail		Linear ball guiding		
	Stage material/Surface treatment		Steel / Nickel plating		
	Main unit weight		0.4 Kg	0.7 Kg	1.0 Kg
	Coupling		FAMC13-5*5		
	Accuracy level		V：Standard grade		
	Wiring method		R：Right wiring (Inventory specification) / L：Left wiring		
Precision specifications	Resolution (pulse)	Full / Half	5 μm / 2.5 μm		
	Maximum speed (full step)		6 mm / sec		
	Positioning precision		25 μm		
	Repeatability precision		±2 μm		
	Load capacity		10 Kgf	12 Kgf	14 Kgf
	Missed step		4 μm		
	Parallelism		20 μm		
	Dynamic straightness		2 μm		
	Dynamic parallelism		10 μm		
Electrical specifications	Motor	Type/Shaft numbers	2-phase stepper / □28 double shafts		
		Brand/ Model	GMT / 2MS-N28D32A		
	Driver brand/Model		GMT / DS2-022A (Additional options)		
	Connector	Stage side connector	15-pin male end connector D-SUB		
		Controller side connector	15-pin female end connector D-SUB (optional)		
	Sensor	Origin sensor	Photoelectric sensor EE-SX498		
		Limit sensor			
		Power voltage	24V±10%		
		Control output	NPN open collector output under 24V 8mA		
		Output control	Testing (sensing): output transistor OFF (closed)		

X axis

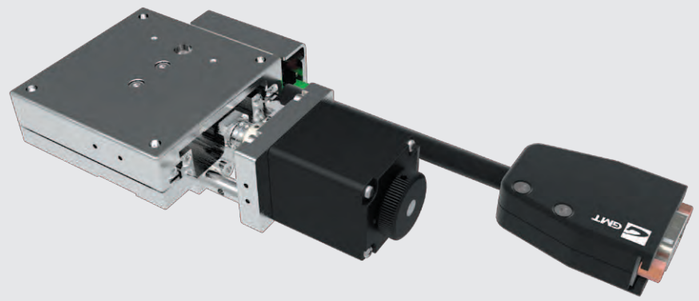

AX40-F1VR-ND

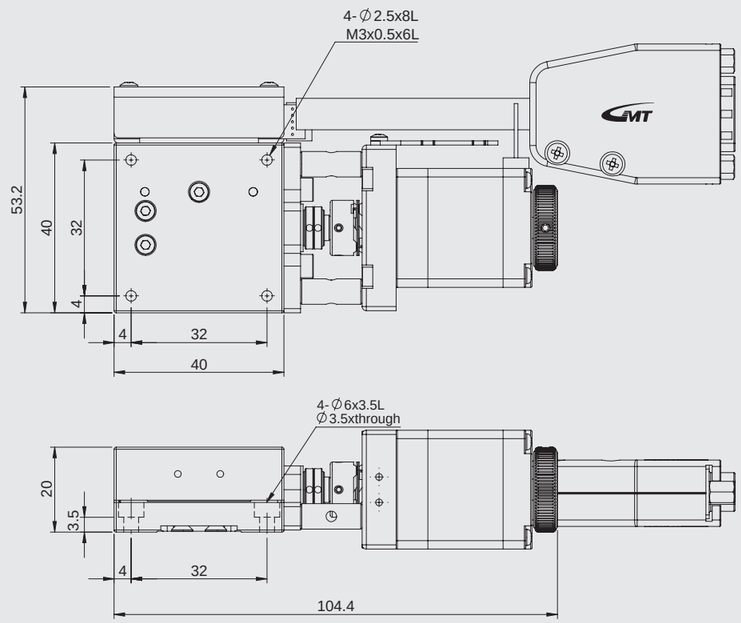

◎ Photo is AX60-F1VR-ND。

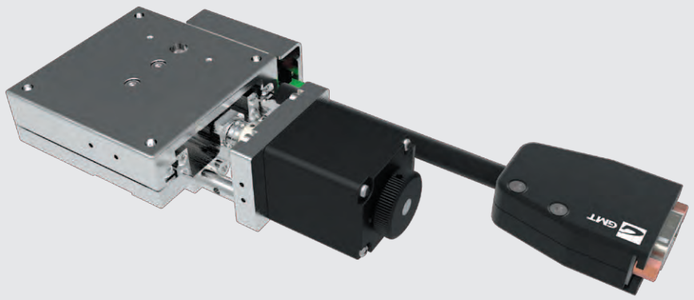

AX60-F1VR-ND

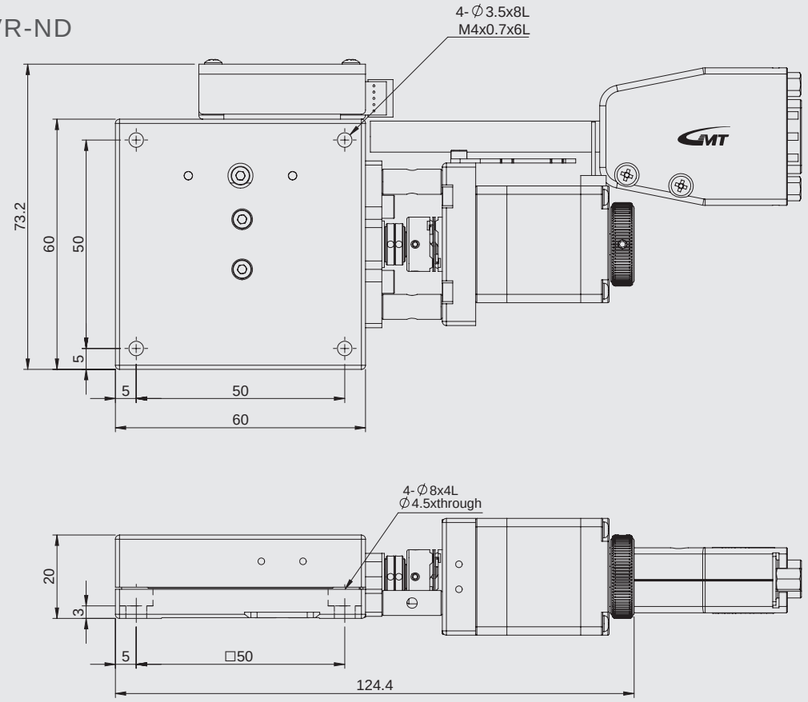

◎ Photo is AX60-F1VR-ND.

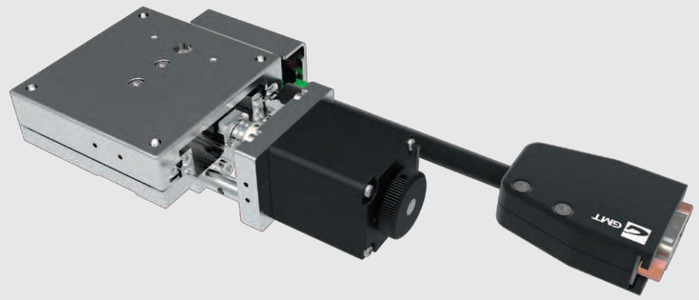

AX80-F1VR-ND

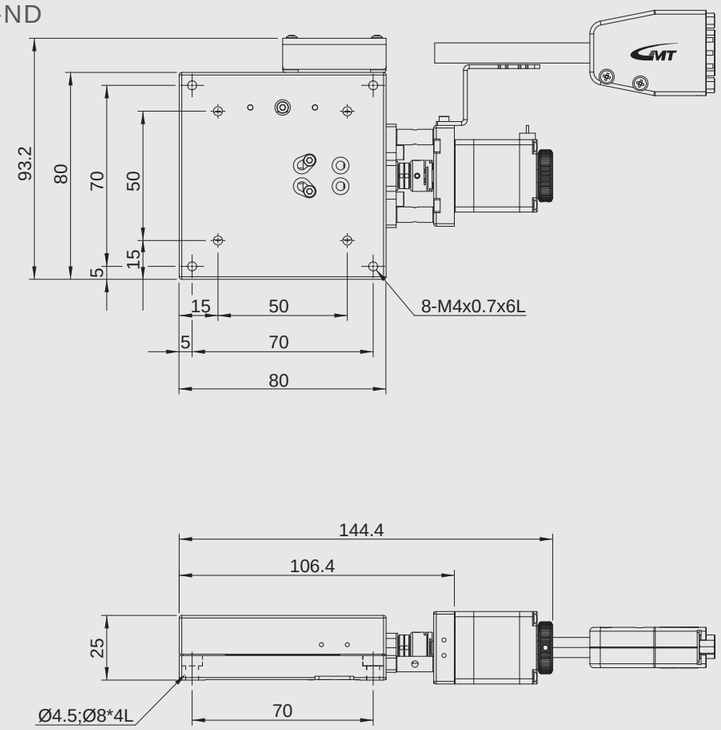

◎ Photo is AX60-F1VR-ND。

AY-F series

Model description

Material		Drive type		Accuracy level		Wiring method		Motor model		Connector type	
A	Steel	1	V-Teeth lead screw	V	Standard grade	R	Right wiring	N	2-phase stepper	D	D-SUB15 (VGA)
						L	Left wiring	X	Not equipped		

AY 40 - F 1 V R - N D - 2 C

Axis & serial numbers	
AY	XY axis

Table size	
40	40*40mm
60	60*60mm
80	80*80mm

Connecting cable (optional)	
Blank	Not equipped
2	2m cable*1
4	4m cable*1

*1 (D-SUB 15 pin female connector + the other side with discrete wirings)

Driver (optional)	
Blank	Not equipped
C	Standard specified by GMT

Model description			AY40-F1VR-ND	AY60-F1VR-ND	AY80-F1VR-ND
			AY40-F1VL-ND	AY60-F1VL-ND	AY80-F1VL-ND
Mechanical specifications	Table size		40X40 mm	60X60 mm	80X80 mm
	Travel stroke			15 mm	
	Drive type		V-Teeth lead screw Ø6 lead 1mm		
	Rail		Linear ball guiding		
	Stage material/Surface treatment		Steel / Nickel plating		
	Main unit weight		0.8 Kg	1.4 Kg	2 Kg
	Coupling		FAMC13-5*5		
	Accuracy level		V：Standard grade		
	Wiring method		R：Right wiring (Inventory specification) / L：Left wiring		
Precision specifications	Resolution (pulse)	Full / Half	5 μm / 2.5 μm		
	Maximum speed (full step)		6 mm / sec		
	Positioning precision		25 μm		
	Repeatability precision		±2 μm		
	Load capacity		9 Kgf	11 Kgf	13 Kgf
	Missed step		4 μm		
	Parallelism		20 μm		
	Dynamic straightness		2 μm		
	Dynamic parallelism		10 μm		
Electrical specifications	Motor	Type/Shaft numbers	2-phase stepper / □28 double shafts		
		Brand/ Model	GMT / 2MS-N28D32A		
	Driver brand/Model		GMT / DS2-022A (Additional options)		
	Connector	Stage side connector	15-pin male end connector D-SUB		
		Controller side connector	15-pin female end connector D-SUB (optional)		
	Sensor	Origin sensor	Photoelectric sensor EE-SX498		
		Limit sensor			
		Power voltage	24V±10%		
		Control output	NPN open collector output under 24V 8mA		
		Output control	Testing (sensing): output transistor OFF (closed)		

XY axis

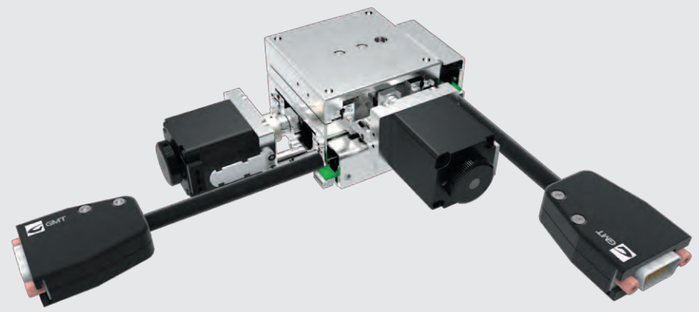

AY40-F1VR-ND

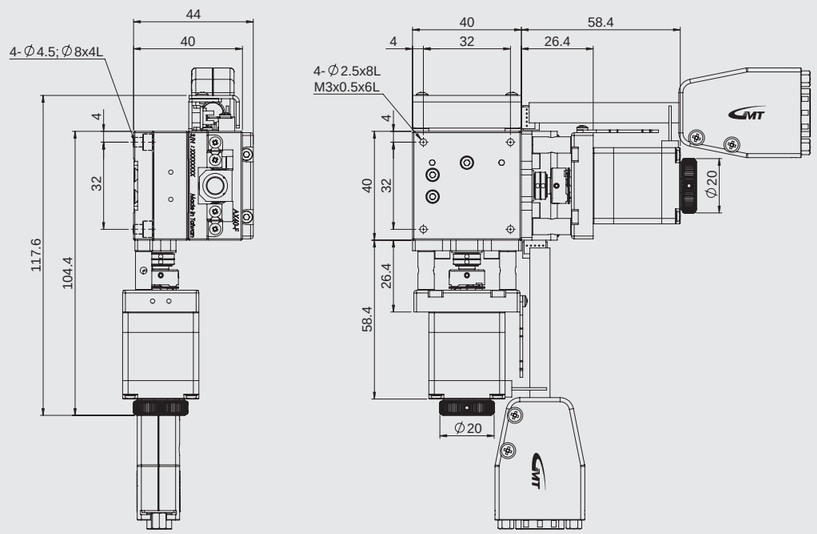

◎ Photo is AY60-F1VR-ND。

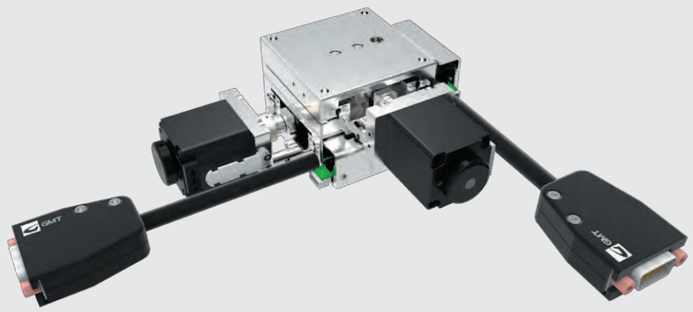

AY60-F1VR-ND

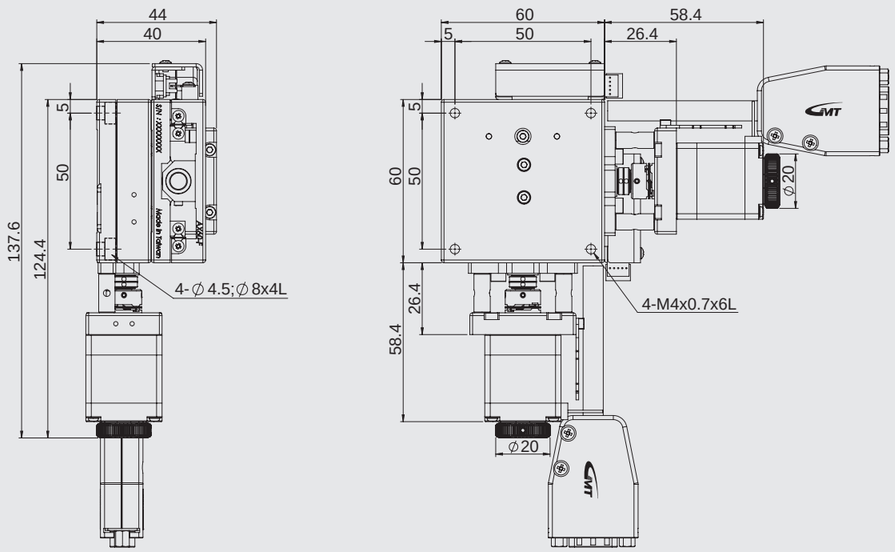

◎ Photo is AY60-F1VR-ND ◦

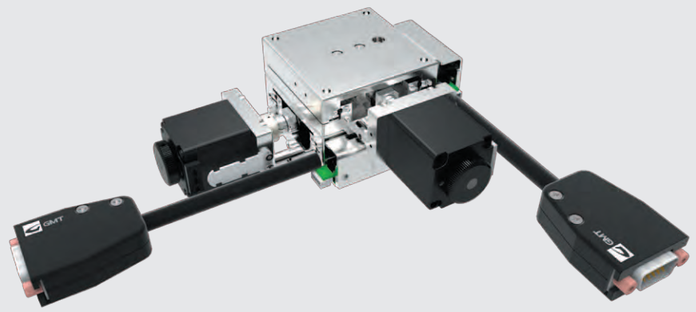

AY80-F1VR-ND

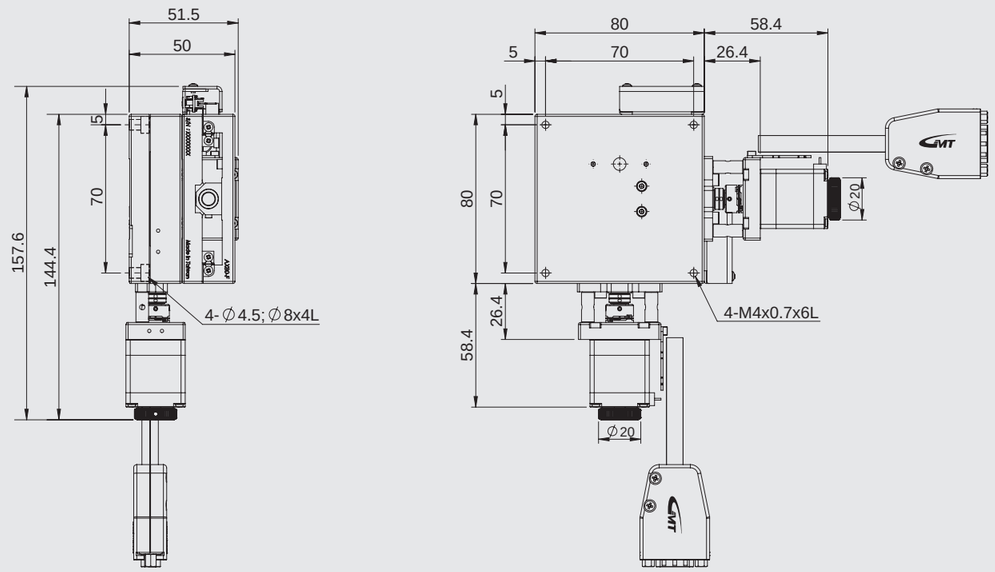

◎ Photo is AY60-F1VR-ND ◦

Model description

CXS50□-S series

Material		Drive type		Accuracy level		Wiring method		Motor model		Connector type	
S	Stainless Steel	1	V-Teeth lead screw	V	Standard grade	N	GMT Standard	N	2-phase stepper	D	D-SUB15 (VGA)
								X	Not equipped		

CXS 50 20 - S 1 V N - N D - 2 C

Axis & serial numbers		Table size		Travel stroke		Connecting cable (optional)		Driver (optional)	
CXS	X axis	50	50*50mm	20	20mm	Blank	Not equipped	Blank	Not equipped
				30	30mm	2	2m cable*1	C	Standard specified by GMT
						4	4m cable*1		

*1 (D-SUB 15 pin female connector + the other side with discrete wirings)

Model description			CYS5020-S1VN-ND	CYS5030-S1VN-ND
Mechanical specifications	Table size		50X50 mm	
	Travel stroke		20 mm	30 mm
	Drive type		V-Teeth lead screw Ø8 lead 1mm	
	Rail		Linear ball guiding	
	Stage material/Surface treatment		Stainless Steel / Nickel plating	
	Main unit weight		0.57 Kg	0.72 Kg
	Coupling		FAMCS10-5*5	
	Accuracy level		V：Standard grade	
	Wiring method		N：GMT Standard*2	
Precision specifications	Resolution (pulse)	Full / Half	5 μm / 2.5 μm	
	Maximum speed (full step)		10 mm / sec	
	Positioning precision		25 μm	
	Repeatability precision		±2 μm	
	Load capacity		6 Kgf	
	Missed step		3 μm	
	Parallelism		15 μm	
	Dynamic straightness		3 μm	
	Dynamic parallelism		10 μm	
Electrical specifications	Motor	Type/Shaft numbers	2-phase stepper / □28 double shafts	
		Brand/ Model	GMT / 2MS-N28D32A	
	Driver brand/Model		GMT / DS2-022A (Additional options)	
	Connector	Stage side connector	15-pin male end connector D-SUB	
		Controller side connector	15-pin female end connector D-SUB (optional)	
	Sensor	Origin sensor	Photoelectric sensor EE-SX498	
		Limit sensor		
		Power voltage	24V±10%	
		Control output	NPN open collector output under 24V 8mA	
		Output control	Testing (sensing): output transistor OFF (closed)	

*2 GMT Standard wiring is defined as the product photo, and not optional available.

X axis

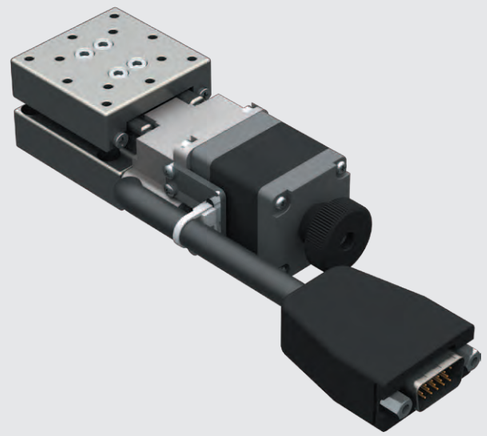

CXS50□-S1VN-ND

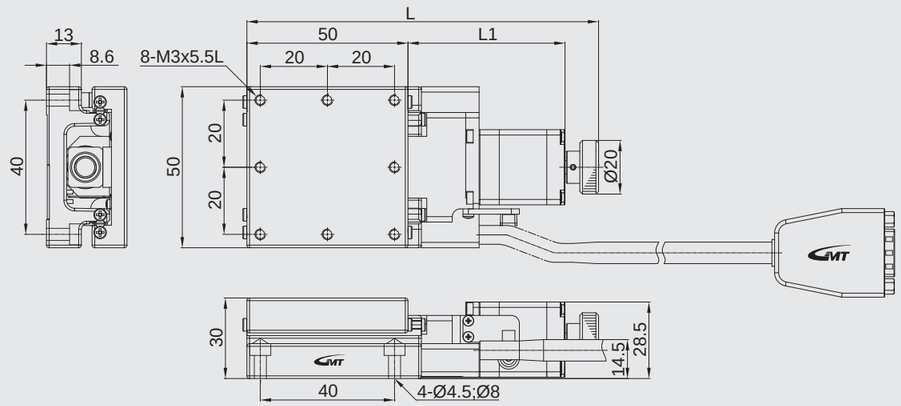

Stroke / Table size	20		30	
	L	L1	L	L1
50	134	70.5	144	80.5

◎ Photo is CXS6030-S1VN-ND ◦

Model description

CXS60□-S series

Material		Drive type		Accuracy level		Wiring method		Motor model		Connector type	
S	Stainless Steel	1	V-Teeth lead screw	V	Standard grade	N	GMT Standard	N	2-phase stepper	D	D-SUB15 (VGA)
								X	Not equipped		

CXS 60 20 - S 1 V N - N D - 2 C

Axis & serial numbers	
CXS	X axis

Table size	
60	60*60mm
60	60*60mm
60	60*80mm

Travel stroke	
20	20mm
30	30mm
50	50mm

Connecting cable (optional)	
Blank	Not equipped
2	2m cable*1
4	4m cable*1

*1 (D-SUB 15 pin female connector + the other side with discrete wirings)

Driver (optional)	
Blank	Not equipped
C	Standard specified by GMT

Model description			CXS6020-S1VN-ND	CXS6030-S1VN-ND	CXS6050-S1VN-ND
Mechanical specifications	Table size		60X60 mm		60X80 mm
	Travel stroke		20 mm	30 mm	50 mm
	Drive type		V-Teeth lead screw Ø8 lead 1mm		
	Rail		Linear ball guiding		
	Stage material/Surface treatment		Stainless Steel / Nickel plating		
	Main unit weight		0.75 Kg	0.8 Kg	1.11 Kg
	Coupling		FAMCS10-5*5		
	Accuracy level		V：Standard grade		
	Wiring method		N：GMT Standard*2		
Precision specifications	Resolution (pulse)	Full / Half	5 μm / 2.5 μm		
	Maximum speed (full step)		10 mm / sec		
	Positioning precision		25 μm		
	Repeatability precision		±2 μm		
	Load capacity		7 Kgf		
	Missed step		3 μm		
	Parallelism		15 μm		
	Dynamic straightness		3 μm		
	Dynamic parallelism		10 μm		
Electrical specifications	Motor	Type/Shaft numbers	2-phase stepper / □28 double shafts		
		Brand/ Model	GMT / 2MS-N28D32A		
	Driver brand/Model		GMT/GTR22G-D (Additional options)		
	Connector	Stage side connector	15-pin male end connector D-SUB		
		Controller side connector	15-pin female end connector D-SUB (optional)		
	Sensor	Origin sensor	Photoelectric sensor EE-SX498		
		Limit sensor			
		Power voltage	24V±10%		
		Control output	NPN open collector output under 24V 8mA		
		Output control	Testing (sensing): output transistor OFF (closed)		

*2 GMT Standard wiring is defined as the product photo, and not optional available.

X axis

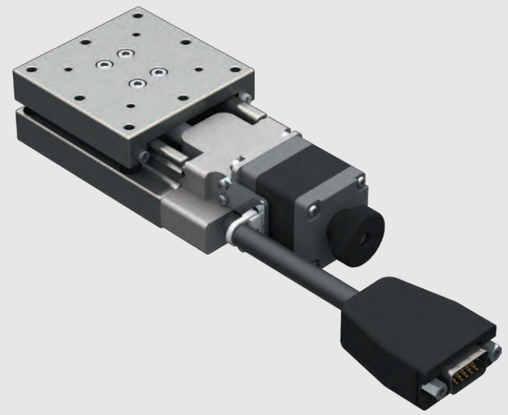

CXS60□-S1VN-ND

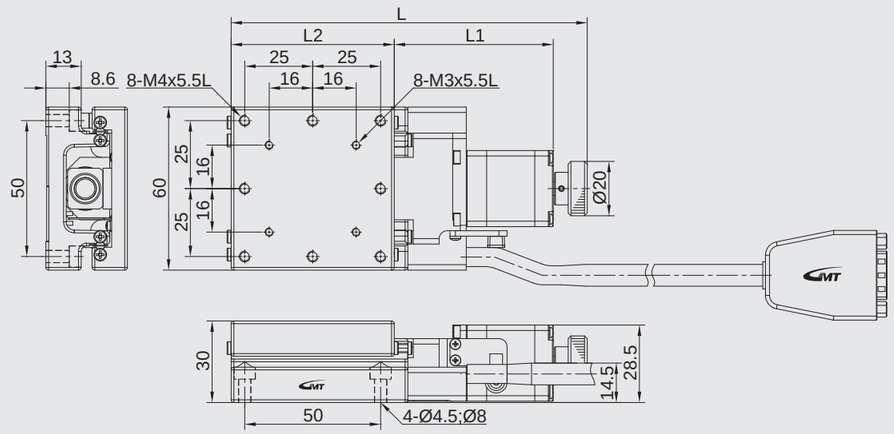

Stroke / Table size	20			30			50		
	L	L1	L2	L	L1	L2	L	L1	L2
60	131	58.5	60	141	68.5	60	194	101.5	80

◎ Photo is CXS6020-S1VN-ND ◦

Model description

CXS80□-S series

Material	
S	Stainless Steel

Drive type	
1	V-Teeth lead screw

Accuracy level	
V	Standard grade

Wiring method	
N	GMT Standard

Motor model	
N	2-phase stepper
X	Not equipped

Connector type	
D	D-SUB15 (VGA)

CXS 80 20 - S 1 V N - N D - 2 C

Axis & serial numbers	
CXS	X axis

Table size	
80	80*80mm
80	80*80mm
80	80*100mm

Travel stroke	
20	20mm
30	30mm
50	50mm

Connecting cable (optional)	
Blank	Not equipped
2	2m cable*1
4	4m cable*1

*1 (D-SUB 15 pin female connector + the other side with discrete wirings)

Driver (optional)	
Blank	Not equipped
C	Standard specified by GMT

Model description			CXS8020-S1VN-ND	CXS8030-S1VN-ND	CXS8050-S1VN-ND
Mechanical specifications	Table size		80X80 mm		80X100 mm
	Travel stroke		20 mm	30 mm	50 mm
	Drive type		V-Teeth lead screw Ø8 lead 1mm		
	Rail		Linear ball guiding		
	Stage material/Surface treatment		Stainless Steel / Nickel plating		
	Main unit weight		1.15 Kg	1.2 Kg	1.35 Kg
	Coupling		FAMCS10-5*5		
	Accuracy level		V：Standard grade		
	Wiring method		N：GMT Standard*2		
Precision specifications	Resolution (pulse)	Full / Half	5 μm / 2.5 μm		
	Maximum speed (full step)		10 mm / sec		
	Positioning precision		25 μm		
	Repeatability precision		±2 μm		
	Load capacity		8 Kgf		
	Missed step		3 μm		
	Parallelism		15 μm		
	Dynamic straightness		3 μm		
	Dynamic parallelism		10 μm		
Electrical specifications	Motor	Type/Shaft numbers	2-phase stepper / □28 double shafts		
		Brand/ Model	GMT / 2MS-N28D32A		
	Driver brand/Model		GMT / DS2-022A (Additional options)		
	Connector	Stage side connector	15-pin male end connector D-SUB		
		Controller side connector	15-pin female end connector D-SUB (optional)		
	Sensor	Origin sensor	Photoelectric sensor EE-SX498		
		Limit sensor			
		Power voltage	24V±10%		
		Control output	NPN open collector output under 24V 8mA		
		Output control	Testing (sensing): output transistor OFF (closed)		

*2 GMT Standard wiring is defined as the product photo, and not optional available.

X axis

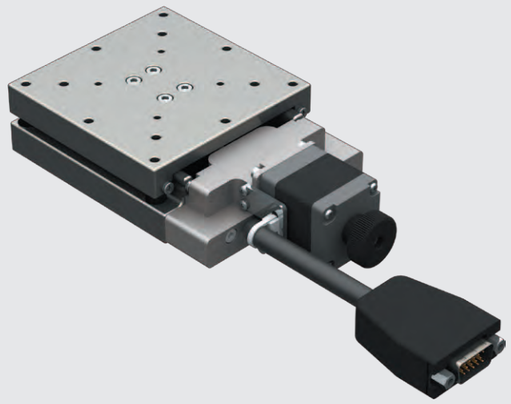

CXS80□-S1VN-ND

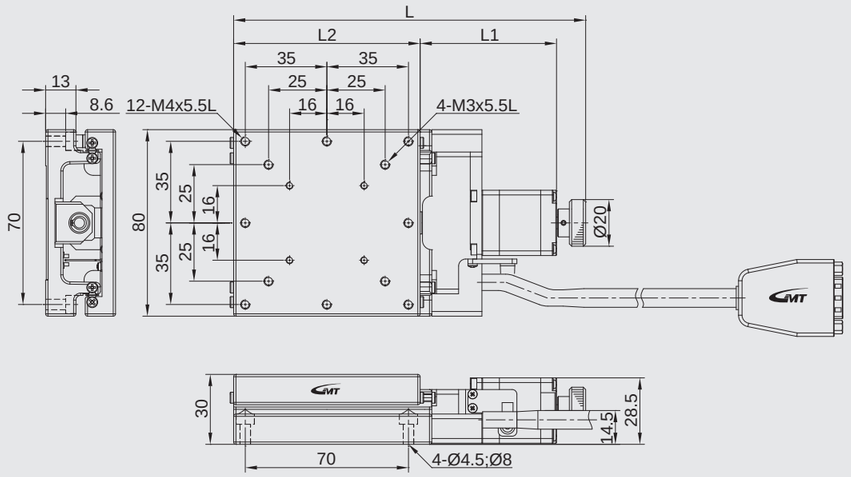

Stroke / Table size	20			30			50		
	L	L1	L2	L	L1	L2	L	L1	L2
80	151	58.5	80	161	68.5	80	194	101.5	100

◎ Photo is CXS8030-S1VN-ND ◦

Model description

CYS50□-S series

Material		Drive type		Accuracy level		Wiring method		Motor model		Connector type	
S	Stainless Steel	1	V-Teeth lead screw	V	Standard grade	N	GMT Standard	N	2-phase stepper	D	D-SUB15 (VGA)
								X	Not equipped		

CYS 50 20 - S 1 V N - N D - 2 C

Axis & serial numbers		Table size		Travel stroke	
CYS	XY axis	50	50*50mm	20	20mm
				30	30mm

Connecting cable (optional)		Driver (optional)	
Blank	Not equipped	Blank	Not equipped
2	2m cable*1	C	Standard specified by GMT
4	4m cable*1		

*1 (D-SUB 15 pin female connector + the other side with discrete wirings)

Model description			CYS5020-S1VN-ND	CYS5030-S1VN-ND
Mechanical specifications	Table size		50X50 mm	
	Travel stroke		20 mm	30 mm
	Drive type		V-Teeth lead screw Ø8 lead 1mm	
	Rail		Linear ball guiding	
	Stage material/Surface treatment		Stainless Steel / Nickel plating	
	Main unit weight		1.14 Kg	1.44 Kg
	Coupling		FAMCS10-5*5	
	Accuracy level		V：Standard grade	
	Wiring method		N：GMT Standard*2	
Precision specifications	Resolution (pulse)	Full / Half	5 μm / 2.5 μm	
	Maximum speed (full step)		10 mm / sec	
	Positioning precision		25 μm	
	Repeatability precision		±2 μm	
	Load capacity		5 Kgf	
	Missed step		3 μm	
	Parallelism		15 μm	
	Dynamic straightness		3 μm	
	Dynamic parallelism		10 μm	
Electrical specifications	Motor	Type/Shaft numbers	2-phase stepper / □28 double shafts	
		Brand/ Model	GMT / 2MS-N28D32A	
	Driver brand/Model		GMT / DS2-022A (Additional options)	
	Connector	Stage side connector	15-pin male end connector D-SUB	
		Controller side connector	15-pin female end connector D-SUB (optional)	
	Sensor	Origin sensor	Photoelectric sensor EE-SX498	
		Limit sensor		
		Power voltage	24V±10%	
		Control output	NPN open collector output under 24V 8mA	
		Output control	Testing (sensing): output transistor OFF (closed)	

*2 GMT Standard wiring is defined as the product photo, and not optional available.

XY axis

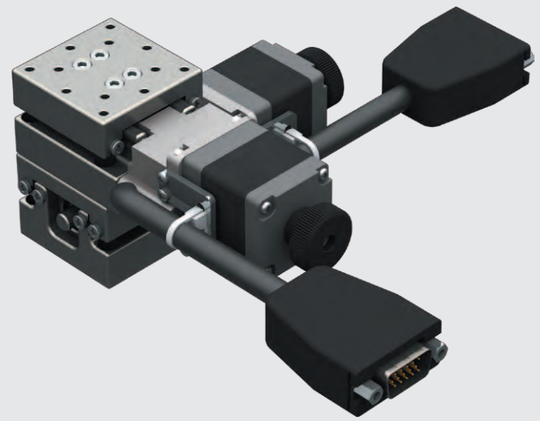

CYS50□-S1VN-ND

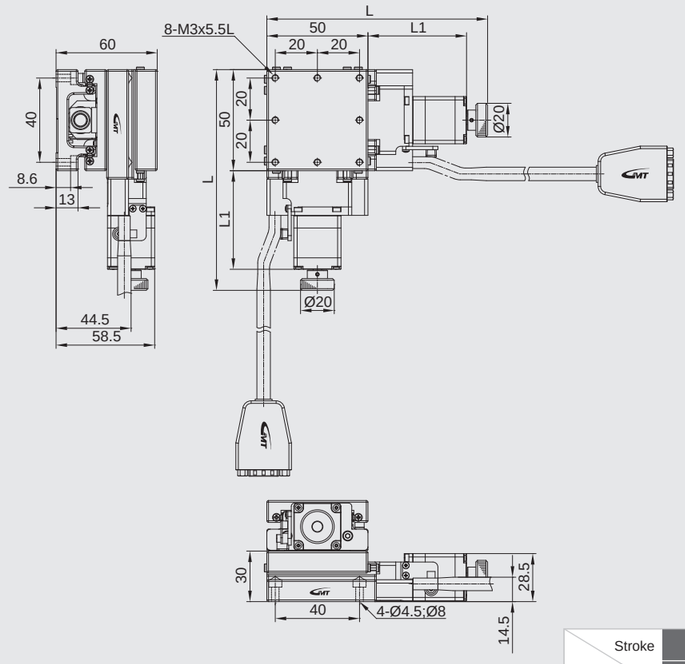

Stroke / Table size	20		30	
	L	L1	L	L1
50	134	70.5	144	80.5

◎ Photo is CYS5030-S1VN-ND ◦

Model description

CYS60□-S series

Material	
S	Stainless Steel

Drive type	
1	V-Teeth lead screw

Accuracy level	
V	Standard grade

Wiring method	
N	GMT Standard

Motor model	
N	2-phase stepper
X	Not equipped

Connector type	
D	D-SUB15 (VGA)

CYS 60 20 - S 1 V N - N D - 2 C

Axis & serial numbers	
CYS	XY axis

Table size	
60	60*60mm
60	60*60mm
60	60*80mm

Travel stroke	
20	20mm
30	30mm
50	50mm

Connecting cable (optional)	
Blank	Not equipped
2	2m cable*1
4	4m cable*1

*1 (D-SUB 15 pin female connector + the other side with discrete wirings)

Driver (optional)	
Blank	Not equipped
C	Standard specified by GMT

Model description			CYS6020-S1VN-ND	CYS6030-S1VN-ND	CYS6050-S1VN-ND
Mechanical specifications	Table size		60X60 mm		60X80 mm
	Travel stroke		20 mm	30 mm	50 mm
	Drive type		V-Teeth lead screw Ø8 lead 1mm		
	Rail		Linear ball guiding		
	Stage material/Surface treatment		Stainless Steel / Nickel plating		
	Main unit weight		1.5 Kg	1.6 Kg	2.22 Kg
	Coupling		FAMCS10-5*5		
	Accuracy level		V：Standard grade		
	Wiring method		N：GMT Standard*2		
Precision specifications	Resolution (pulse)	Full / Half	5 μm / 2.5 μm		
	Maximum speed (full step)		10 mm / sec		
	Positioning precision		25 μm		
	Repeatability precision		±2 μm		
	Load capacity		6 Kgf		
	Missed step		3 μm		
	Parallelism		15 μm		
	Dynamic straightness		3 μm		
	Dynamic parallelism		10 μm		
Electrical specifications	Motor	Type/Shaft numbers	2-phase stepper / □28 double shafts		
		Brand/ Model	GMT / 2MS-N28D32A		
	Driver brand/Model		GMT / DS2-022A (Additional options)		
	Connector	Stage side connector	15-pin male end connector D-SUB		
		Controller side connector	15-pin female end connector D-SUB (optional)		
	Sensor	Origin sensor	Photoelectric sensor EE-SX498		
		Limit sensor			
		Power voltage	24V±10%		
		Control output	NPN open collector output under 24V 8mA		
		Output control	Testing (sensing): output transistor OFF (closed)		

*2 GMT Standard wiring is defined as the product photo, and not optional available.

XY axis

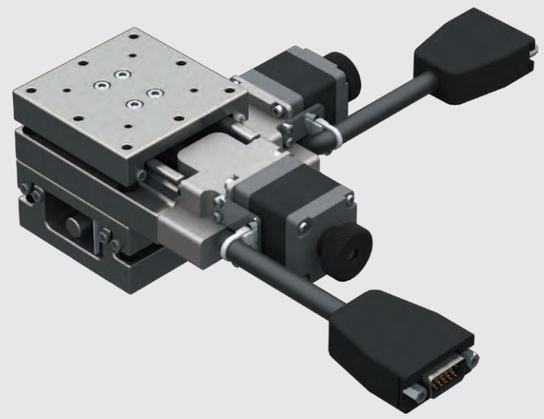

CYS60□-S1VN-ND

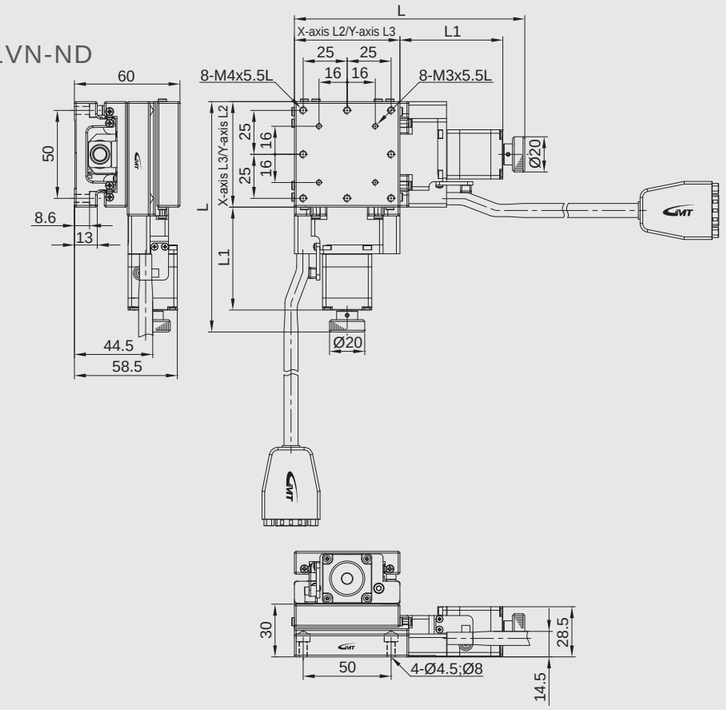

Stroke / Table size	20				30				50			
	L	L1	L2	L3	L	L1	L2	L3	L	L1	L2	L3
60	131	58.5	60	60	141	68.5	60	60	194	101.5	80	60

◎ Photo is CYS6030-S1VN-ND ◦

Model description

CYS80□-S series

Material	
S	Stainless Steel

Drive type	
1	V-Teeth lead screw

Accuracy level	
V	Standard grade

Wiring method	
N	GMT Standard

Motor model	
N	2-phase stepper
X	Not equipped

Connector type	
D	D-SUB15 (VGA)

CYS 80 20 - S 1 V N - N D - 2 C

Axis & serial numbers	
CYS	XY axis

Table size	
80	80*80mm
80	80*80mm
80	80*100mm

Travel stroke	
20	20mm
30	30mm
50	50mm

Connecting cable (optional)	
Blank	Not equipped
2	2m cable*1
4	4m cable*1

*1 (D-SUB 15 pin female connector + the other side with discrete wirings)

Driver (optional)	
Blank	Not equipped
C	Standard specified by GMT

Model description			CYS8020-S1VN-ND	CYS8030-S1VN-ND	CYS8050-S1VN-ND
Mechanical specifications	Table size		80X80 mm		80X100 mm
	Travel stroke		20 mm	30 mm	50 mm
	Drive type		V-Teeth lead screw Ø8 lead 1mm		
	Rail		Linear ball guiding		
	Stage material/Surface treatment		Stainless Steel / Nickel plating		
	Main unit weight		2.3 Kg	2.4 Kg	2.7 Kg
	Coupling		FAMCS10-5*5		
	Accuracy level		V：Standard grade		
	Wiring method		N：GMT Standard*2		
Precision specifications	Resolution (pulse)	Full / Half	5 μm / 2.5 μm		
	Maximum speed (full step)		10 mm / sec		
	Positioning precision		25 μm		
	Repeatability precision		±2 μm		
	Load capacity		6 Kgf		
	Missed step		3 μm		
	Parallelism		15 μm		
	Dynamic straightness		3 μm		
	Dynamic parallelism		10 μm		
Electrical specifications	Motor	Type/Shaft numbers	2-phase stepper / □28 double shafts		
		Brand/ Model	GMT / 2MS-N28D32A		
	Driver brand/Model		GMT / DS2-022A (Additional options)		
	Connector	Stage side connector	15-pin male end connector D-SUB		
		Controller side connector	15-pin female end connector D-SUB (optional)		
	Sensor	Origin sensor	Photoelectric sensor EE-SX498		
		Limit sensor			
		Power voltage	24V±10%		
		Control output	NPN open collector output under 24V 8mA		
		Output control	Testing (sensing): output transistor OFF (closed)		

*2 GMT Standard wiring is defined as the product photo, and not optional available.

XY axis

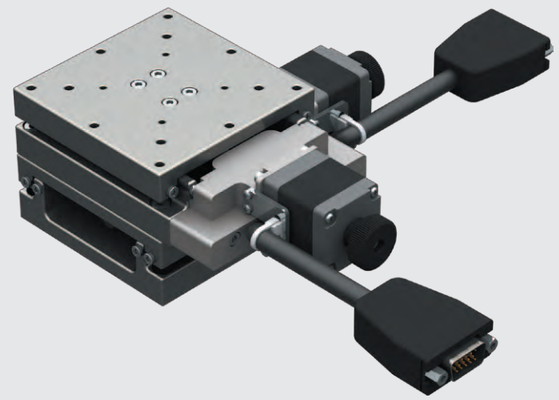

CYS80□-S1VN-ND

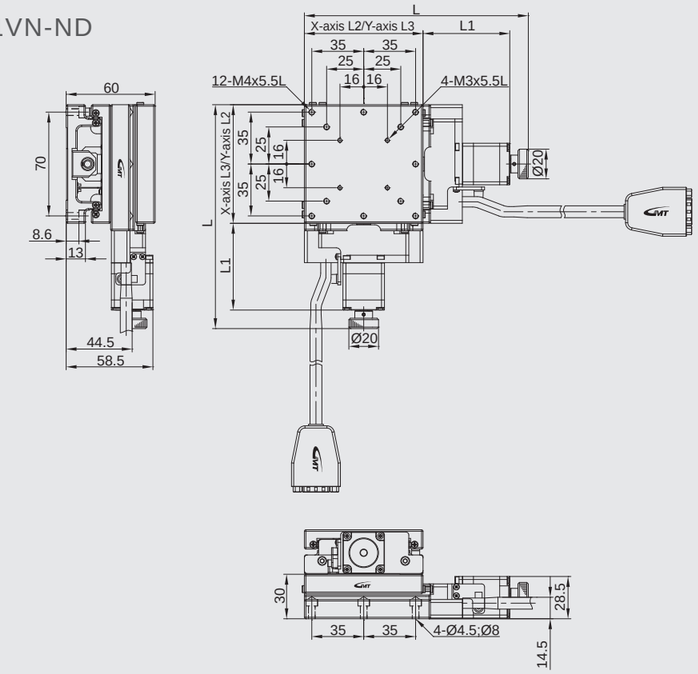

Stroke / Table size	20				30				50			
	L	L1	L2	L3	L	L1	L2	L3	L	L1	L2	L3
80	151	58.5	80	80	161	68.5	80	80	194	101.5	100	80

◎ Photo is CYS8030-S1VN-ND ◦

Model description CXN50□ / CXC50□-S series

Material	
S	Stainless Steel

Drive type	
1	V-Teeth lead screw

Accuracy level	
V	Standard grade

Wiring method	
N	GMT Standard

Motor model	
N	2-phase stepper
X	Not equipped

Connector type	
D	D-SUB15 (VGA)

CXN 50 50 - S 1 V N - N D - P1 2 C

Axis & serial numbers	
CXN	X axis (w/o cover)
CXC	X axis (w/cover)

Table size	
50	50*50mm

Stroke	
50	50mm
75	75mm
100	100mm

Ball screw pitch	
P1	1mm
P2	2mm

Connecting cable (optional)	
Blank	Not equipped
2	2m cable*1
4	4m cable*1

*1 (D-SUB 15 pin female connector + the other side with discrete wirings)

Driver (optional)	
Blank	Not equipped
C	Standard specified by GMT

Model description			CXN5050-S1VN-ND-P1	CXN5050-S1VN-ND-P2	CXN5075-S1VN-ND-P1	CXN5075-S1VN-ND-P2	CXN50100-S1VN-ND-P1	CXN50100-S1VN-ND-P2
			CXC5050-S1VN-ND-P1	CXC5050-S1VN-ND-P2	CXC5075-S1VN-ND-P1	CXC5075-S1VN-ND-P2	CXC50100-S1VN-ND-P1	CXC50100-S1VN-ND-P2
Mechanical specifications	Table size		50X50 mm					
	Travel stroke		50 mm		75 mm		100 mm	
	Drive type		V-Teeth lead screw Ø8 lead 1mm	V-Teeth lead screw Ø8 lead 2mm	V-Teeth lead screw Ø8 lead 1mm	V-Teeth lead screw Ø8 lead 2mm	V-Teeth lead screw Ø8 lead 1mm	V-Teeth lead screw Ø8 lead 2mm
	Rail		Circular Linear ball guiding					
	Stage material/Surface treatment		Stainless Steel / Nickel plating					
	Main unit weight		N：1.1 Kg / C：1.17 Kg		N：1.24 Kg / C：1.29 Kg		N：1.35 Kg / C：1.39 Kg	
	Coupling		FAMCS10-5*5					
	Accuracy level		V：Standard grade					
	Wiring method		N：GMT Standard*2					
Precision specifications	Resolution (pulse)	Full / Half	5 μm / 2.5 μm	10 μm / 5 μm	5 μm / 2.5 μm	10 μm / 5 μm	5 μm / 2.5 μm	10 μm / 5 μm
	Maximum speed (full step)		10 mm / sec	20 mm / sec	10 mm / sec	20 mm / sec	10 mm / sec	20 mm / sec
	Positioning precision		25 μm					
	Repeatability precision		±2 μm					
	Load capacity		10 Kgf					
	Missed step		3 μm					
	Parallelism		15 μm					
	Dynamic straightness		3 μm					
	Dynamic parallelism		10 μm					
Electrical specifications	Motor	Type/Shaft numbers	2-phase stepper / □28 double shafts					
		Brand/ Model	GMT / 2MS-N28D32A					
	Driver brand/Model		GMT / DS2-022A (Additional options)					
	Connector	Stage side connector	15-pin male end connector D-SUB					
		Controller side connector	15-pin female end connector D-SUB (optional)					
	Sensor	Origin sensor	Photoelectric sensor EE-SX4134					
		Limit sensor						
		Power voltage	24V±10%					
		Control output	NPN open collector output under 24V 8mA					
		Output control	Testing (sensing): output transistor OFF (closed)					

*2 GMT Standard wiring is defined as the product photo, and not optional available.

Standard Motorized **X axis** Linear-motion Stage ▶ **Circular linear ball guiding**
CXN50□ / CXC50□-S series-V-Teeth lead screw Design
GMT GLOBAL INC.

X axis

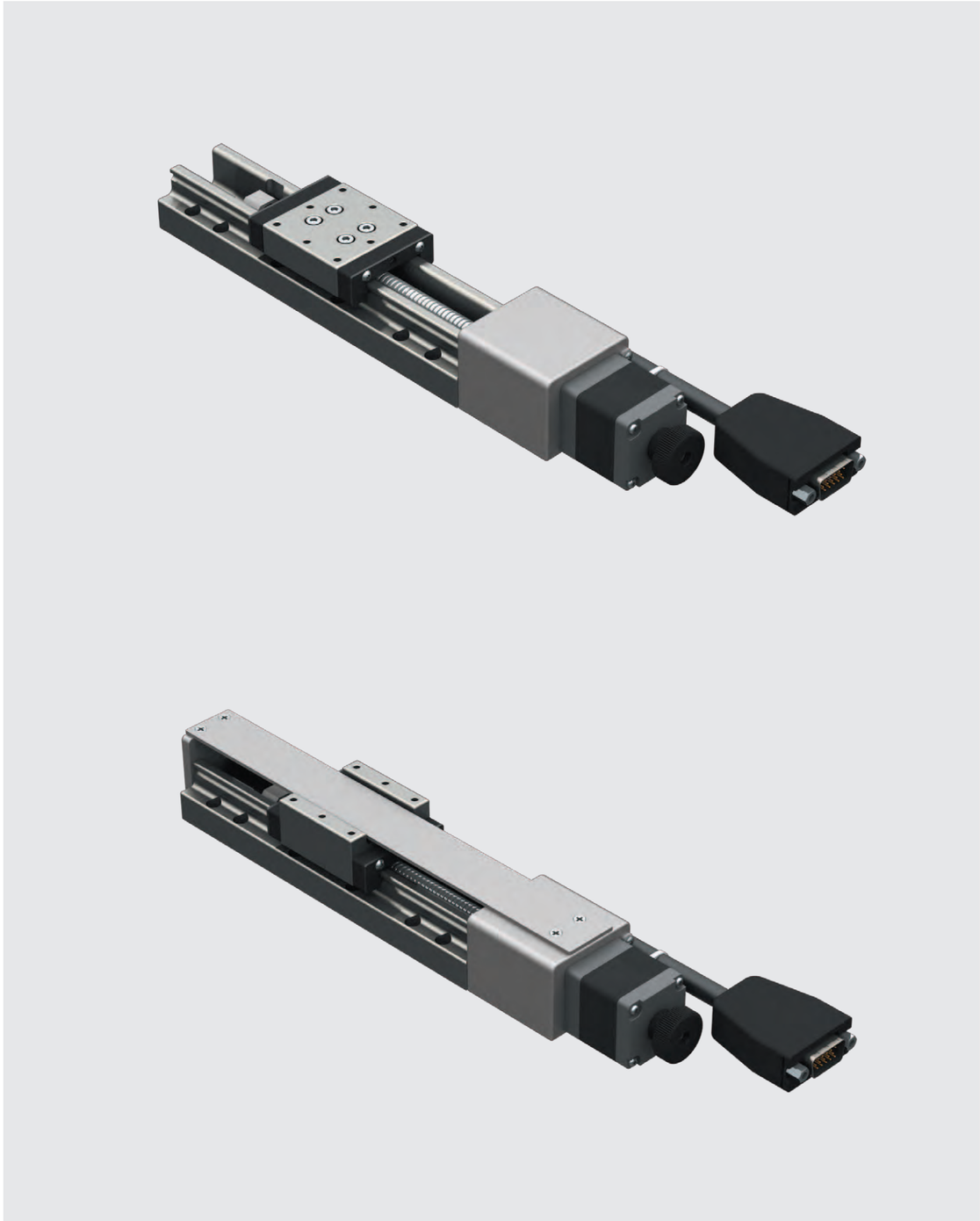

◎ Photos are CXN50100-S1VN-ND(UP) and CXC50100-S1VN-ND(DOWN).

CXN50□ / CXC50□-S series-V-Teeth lead screw Design

CXN50□-S1VN-ND

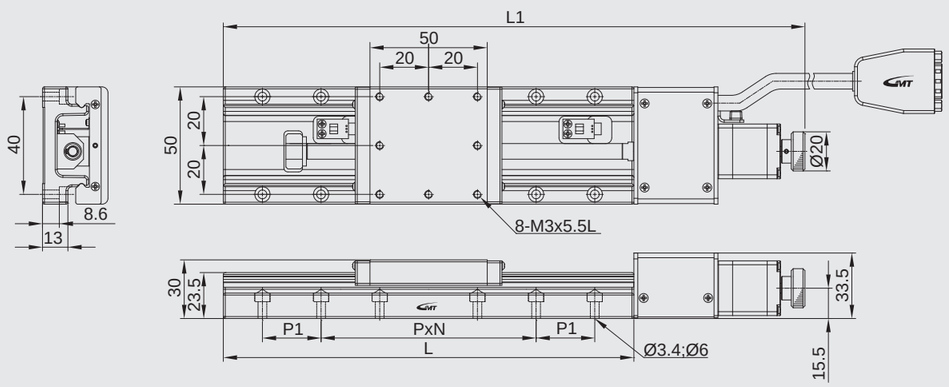

Stroke	L	L1	P	N	P1
50	120	217.5	40	3	N/A
75	145	242.5	40	3	N/A
100	170	268	40	4	N/A

CXC50□-S1VN-ND

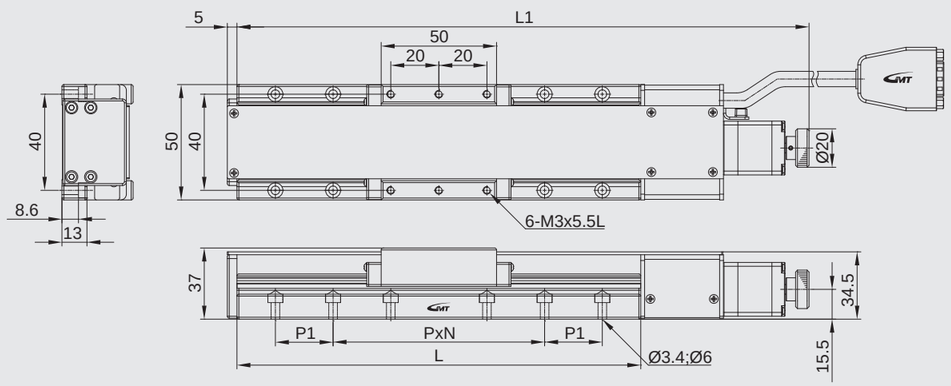

Stroke	L	L1	P	N	P1
50	120	217.5	40	3	N/A
75	145	242.5	40	3	N/A
100	170	268	40	4	N/A

Model description CXN60□ / CXC60□-S series

Material	
S	Stainless Steel

Drive type	
1	V-Teeth lead screw

Accuracy level	
V	Standard grade

Wiring method	
N	GMT Standard

Motor model	
N	2-phase stepper
X	Not equipped

Connector type	
D	D-SUB15 (VGA)

CXN 60 50 - S 1 V N - N D - P1 2 C

Axis & serial numbers	
CXN	X axis (w/o cover)
CXC	X axis (w/cover)

Table size	
60	60*60mm

Stroke	
50	50mm
75	75mm
100	100mm

Ball screw pitch	
P1	1mm
P2	2mm

Connecting cable (optional)	
Blank	Not equipped
2	2m cable*1
4	4m cable*1

*1 (D-SUB 15 pin female connector + the other side with discrete wirings)

Driver (optional)	
Blank	Not equipped
C	Standard specified by GMT

Model description			CXN6050-S1VN-ND-P1	CXN6050-S1VN-ND-P2	CXN6075-S1VN-ND-P1	CXN6075-S1VN-ND-P2	CXN60100-S1VN-ND-P1	CXN60100-S1VN-ND-P2
			CXC6050-S1VN-ND-P1	CXC6050-S1VN-ND-P2	CXC6075-S1VN-ND-P1	CXC6075-S1VN-ND-P2	CXC60100-S1VN-ND-P1	CXC60100-S1VN-ND-P2
Mechanical specifications	Table size		60X60 mm					
	Travel stroke		50 mm		75 mm		100 mm	
	Drive type		V-Teeth lead screw Ø8 lead 1mm	V-Teeth lead screw Ø8 lead 2mm	V-Teeth lead screw Ø8 lead 1mm	V-Teeth lead screw Ø8 lead 2mm	V-Teeth lead screw Ø8 lead 1mm	V-Teeth lead screw Ø8 lead 2mm
	Rail		Circular Linear ball guiding					
	Stage material/Surface treatment		Stainless Steel / Nickel Plating					
	Main unit weight		N：1.19 Kg / C：1.33 Kg		N：1.3 Kg / C：1.44 Kg		N：1.47 Kg / C：1.61 Kg	
	Coupling		FAMCS10-5*5					
	Accuracy level		V：Standard grade					
	Wiring method		N：GMT Standard*2					
Precision specifications	Resolution (pulse)	Full / Half	5 μm / 2.5 μm	10 μm / 5 μm	5 μm / 2.5 μm	10 μm / 5 μm	5 μm / 2.5 μm	10 μm / 5 μm
	Maximum speed (full step)		10 mm / sec	20 mm / sec	10 mm / sec	20 mm / sec	10 mm / sec	20 mm / sec
	Positioning precision		25 μm					
	Repeatability precision		±2 μm					
	Load capacity		14 Kgf					
	Missed step		3 μm					
	Parallelism		20 μm					
	Dynamic straightness		3 μm					
	Dynamic parallelism		10 μm					
Electrical specifications	Motor	Type/Shaft numbers	2-phase stepper / □28 double shafts					
		Brand/ Model	GMT / 2MS-N28D32A					
	Driver brand/Model		GMT / DS2-022A (Additional options)					
	Connector	Stage side connector	15-pin male end connector D-SUB					
		Controller side connector	15-pin female end connector D-SUB (optional)					
	Sensor	Origin sensor	Photoelectric sensor EE-SX498					
		Limit sensor						
		Power voltage	24V±10%					
		Control output	NPN open collector output under 24V 8mA					
		Output control	Testing (sensing): output transistor OFF (closed)					

*2 GMT Standard wiring is defined as the product photo, and not optional available.

X axis

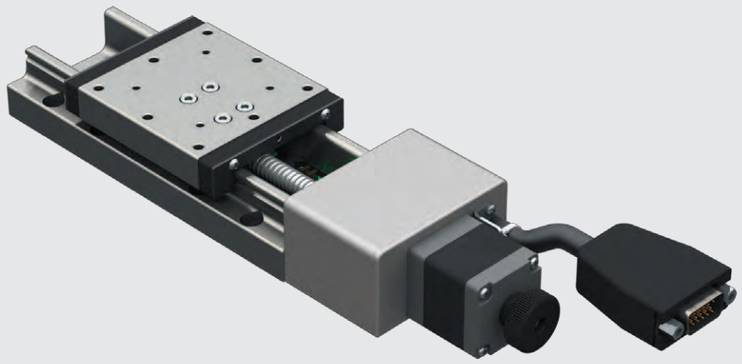

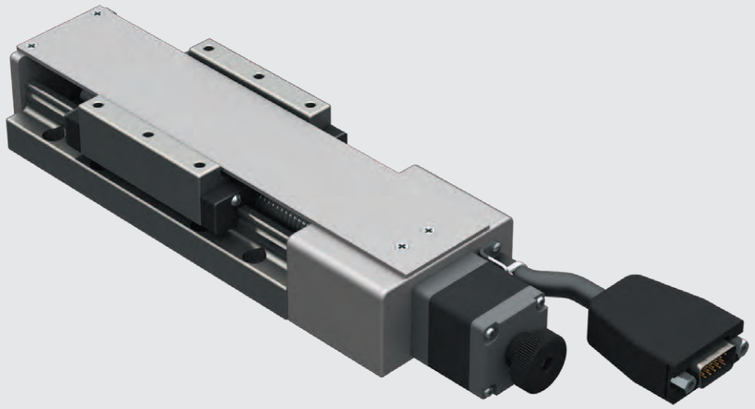

◎ Photos are CXN60100-S1VN-ND(UP) and CXC60100-S1VN-ND(DOWN).

CXN60□-S1VN-ND

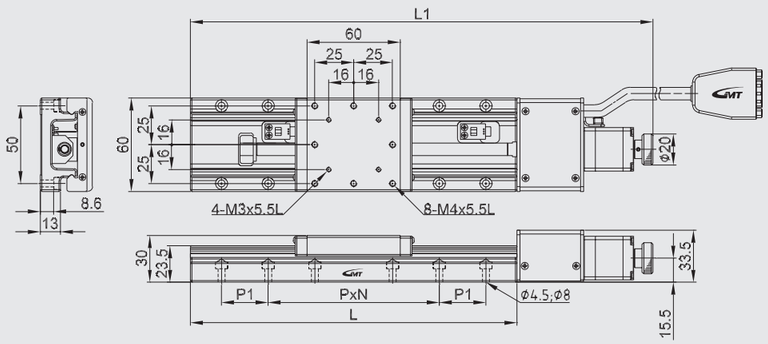

Stroke	L	L1	P	N	P1
50	140	229	50	1	25
75	165	254	50	3	N/A
100	190	298.5	50	3	N/A

CXC60□-S1VN-ND

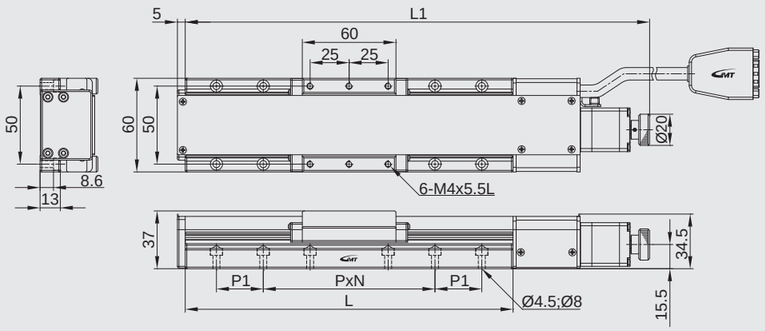

Stroke	L	L1	P	N	P1
50	140	229	50	1	25
75	165	254	50	3	N/A
100	190	298.5	50	3	N/A

Model description CXN80□ / CXC80□-S series

Material	
S	Stainless Steel

Drive type	
1	V-Teeth lead screw

Accuracy level	
V	Standard grade

Wiring method	
N	GMT Standard

Motor model	
N	2-phase stepper
X	Not equipped

Connector type	
D	D-SUB15 (VGA)

CXN 80 50 - S 1 V N - N D - P1 2 C

Axis & serial numbers	
CXN	X axis (w/o cover)
CXC	X axis (w/cover)

Table size	
80	80*80mm

Stroke	
50	50mm
75	75mm
100	100mm

Ball screw pitch	
P1	1mm
P2	2mm

Connecting cable (optional)	
Blank	Not equipped
2	2m cable*1
4	4m cable*1

*1 (D-SUB 15 pin female connector + the other side with discrete wirings)

Driver (optional)	
Blank	Not equipped
C	Standard specified by GMT

Model description			CXN8050-S1VN-ND-P1	CXN8050-S1VN-ND-P2	CXN8075-S1VN-ND-P1	CXN8075-S1VN-ND-P2	CXN80100-S1VN-ND-P1	CXN80100-S1VN-ND-P2
			CXC8050-S1VN-ND-P1	CXC8050-S1VN-ND-P2	CXC8075-S1VN-ND-P1	CXC8075-S1VN-ND-P2	CXC80100-S1VN-ND-P1	CXC80100-S1VN-ND-P2
Mechanical specifications	Table size		80X80 mm					
	Travel stroke		50 mm		75 mm		100 mm	
	Drive type		V-Teeth lead screw Ø8 lead 1mm	V-Teeth lead screw Ø8 lead 2mm	V-Teeth lead screw Ø8 lead 1mm	V-Teeth lead screw Ø8 lead 2mm	V-Teeth lead screw Ø8 lead 1mm	V-Teeth lead screw Ø8 lead 2mm
	Rail		Circular Linear ball guiding					
	Stage material/Surface treatment		Stainless Steel / Nickel plating					
	Main unit weight		N：1.68 Kg / C：1.86 Kg		N：1.84 Kg / C：2.03 Kg		N：2.02 Kg / C：2.2 Kg	
	Coupling		FAMCS10-5*5					
	Accuracy level		V：Standard grade					
	Wiring method		N：GMT Standard*2					
Precision specifications	Resolution (pulse)	Full / Half	5 μm / 2.5 μm	10 μm / 5 μm	5 μm / 2.5 μm	10 μm / 5 μm	5 μm / 2.5 μm	10 μm / 5 μm
	Maximum speed (full step)		10 mm / sec	20 mm / sec	10 mm / sec	20 mm / sec	10 mm / sec	20 mm / sec
	Positioning precision		25 μm					
	Repeatability precision		±2 μm					
	Load capacity		16 Kgf					
	Missed step		3 μm					
	Parallelism		20 μm					
	Dynamic straightness		3 μm					
	Dynamic parallelism		10 μm					
Electrical specifications	Motor	Type/Shaft numbers	2-phase stepper / □28 double shafts					
		Brand/ Model	GMT / 2MS-N28D32A					
	Driver brand/Model		GMT / DS2-022A (Additional options)					
	Connector	Stage side connector	15-pin male end connector D-SUB					
		Controller side connector	15-pin female end connector D-SUB (optional)					
	Sensor	Origin sensor	Photoelectric sensor EE-SX4134					
		Limit sensor						
		Origin approximation sensor	N/A					
		Power voltage	24V±10%					
		Control output	NPN open collector output under 24V 8mA					
		Output control	Testing (sensing)：output transistor OFF (closed)					

*2 GMT Standard wiring is defined as the product photo, and not optional available.

X axis

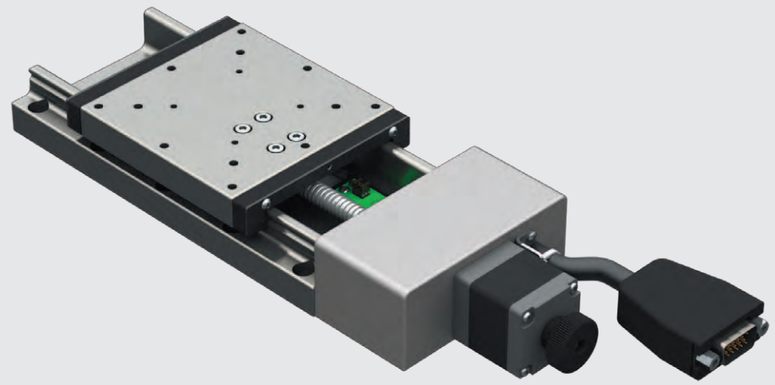

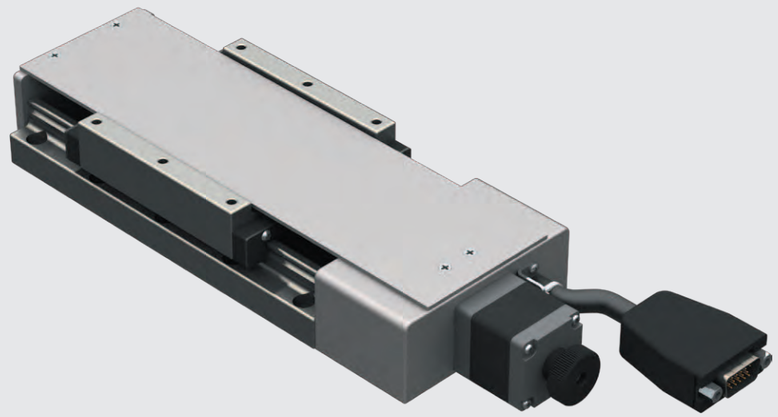

◎ Photos are CXN80100-S1VN-ND(UP) and CXC80100-S1VN-ND(DOWN).

CXN80□-S1VN-ND

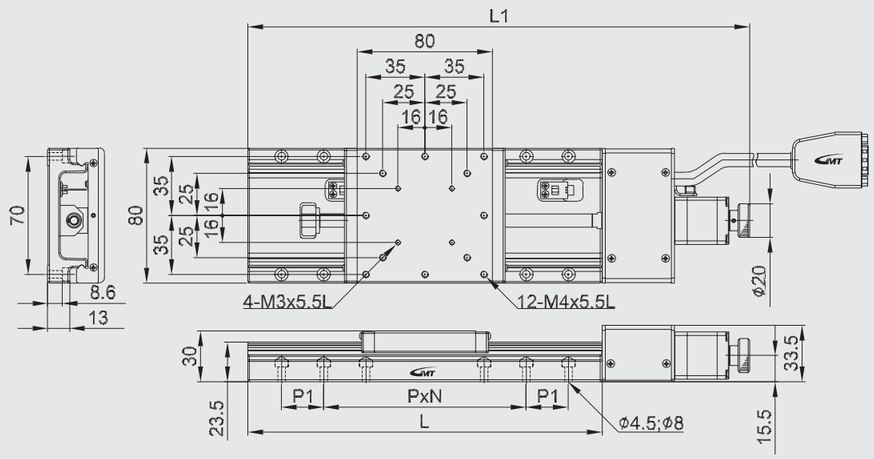

Stroke	L	L1	P	N	P1
50	160	247.5	70	1	35
75	185	272.5	70	1	35
100	210	297.5	70	1	35

CXC80□-S1VN-ND

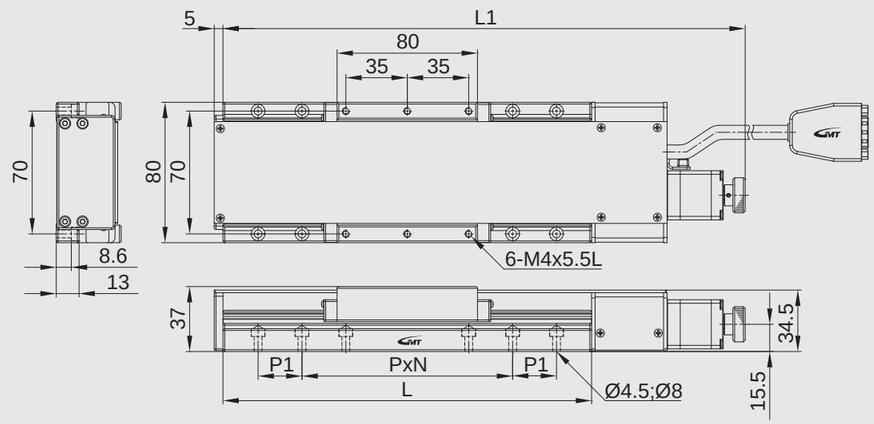

Stroke	L	L1	P	N	P1
50	160	247.5	70	1	35
75	185	272.5	70	1	35
100	210	297.5	70	1	35

Model description CYN50□ / CYC50□-S series

Material	
S	Stainless Steel

Drive type	
1	V-Teeth lead screw

Accuracy level	
V	Standard grade

Wiring method	
N	GMT Standard

Motor model	
N	2-phase stepper
X	Not equipped

Connector type	
D	D-SUB15 (VGA)

CYN 50 50 - S 1 V N - N D - P1 2 C

Axis & serial numbers	
CYN	XY axis (w/o cover)
CYC	XY axis (w/cover)

Table size	
50	50*50mm

Stroke	
50	50mm
75	75mm

Ball screw pitch	
P1	1mm
P2	2mm

Connecting cable (optional)	
Blank	Not equipped
2	2m cable*1
4	4m cable*1

Driver (optional)	
Blank	Not equipped
C	Standard specified by GMT

*1 (D-SUB 15 pin female connector + the other side with discrete wirings)

Model Number		CYN5050-S1VN-CD-P1	CYN5050-S1VN-CD-P2	CYN5075-S1VN-CD-P1	CYN5075-S1VN-CD-P2
		CYC5050-S1VN-CD-P1	CYC5050-S1VN-CD-P2	CYC5075-S1VN-CD-P1	CYC5075-S1VN-CD-P2
Mechanical specifications	Table size	50X50 mm			
	Travel stroke	50 mm		75 mm	
	Drive type	V-Teeth lead screw Ø8 lead 1mm	V-Teeth lead screw Ø8 lead 2mm	V-Teeth lead screw Ø8 lead 1mm	V-Teeth lead screw Ø8 lead 2mm
	Rail	Circular Linear ball guiding			
	Stage material/Surface treatment	Stainless Steel / Nickel plating			
	Main unit weight	N：2.2 Kg / C：2.34 Kg		N：2.48 Kg / C：2.58 Kg	
	Coupling	FAMCS10-S-5*5			
	Accuracy level	V：Standard grade			
	Wiring method	N：GMT Standard*2			
Precision specifications	Resolution (pulse) Full / Half	5 μm / 2.5 μm	10 μm / 5 μm	5 μm / 2.5 μm	10 μm / 5 μm
	Maximum speed (full step)	10 mm / sec	20 mm / sec	10 mm / sec	20 mm / sec
	Positioning precision	25 μm			
	Repeatability precision	±2 μm			
	Load capacity	10 Kgf			
	Missed step	3 μm			
	Parallelism	15 μm			
	Dynamic straightness	3 μm			
	Dynamic parallelism	10 μm			
Electrical specifications	Motor: Type/Shaft numbers	2-phase steppinger / □28 double shafts			
	Motor: Brand/ Model	GMT / 2MS-N28D32A			
	Driver brand/Model	GMT/GTR22G-D (Additional options)			
	Connector: Stage side connector	15-pin male end connector D-SUB			
	Connector: Controller side connector	15-pin female end connector D-SUB (optional)			
	Sensor: Origin sensor	Photoelectric sensor EE-SX4134			
	Sensor: Limit sensor				
	Sensor: Origin approximation sensor	N/A			
	Sensor: Power voltage	24V±10%			
	Sensor: Control output	NPN open collector output under 24V 8mA			
	Sensor: Output control	Testing (sensing)：output transistor OFF (closed)			

*2 GMT Standard wiring is defined as the product photo, and not optional available.

Standard Motorized **XY axis** Linear-motion Stage ▶ **Circular linear ball guiding**
CYN50□ / CYC50□-S series-V-Teeth lead screw Design
GMT GLOBAL INC.

XY axis

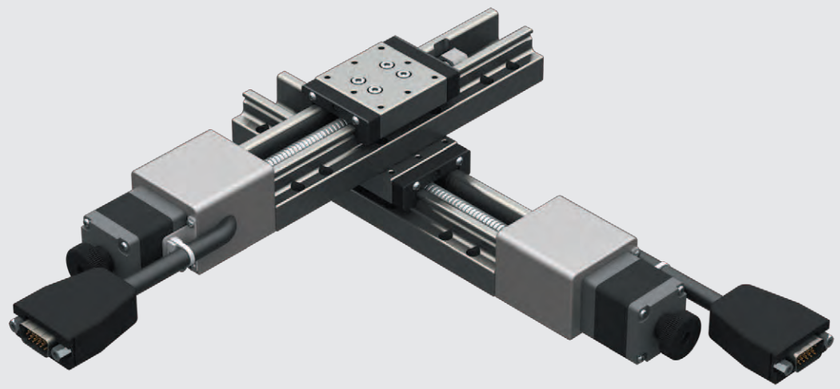

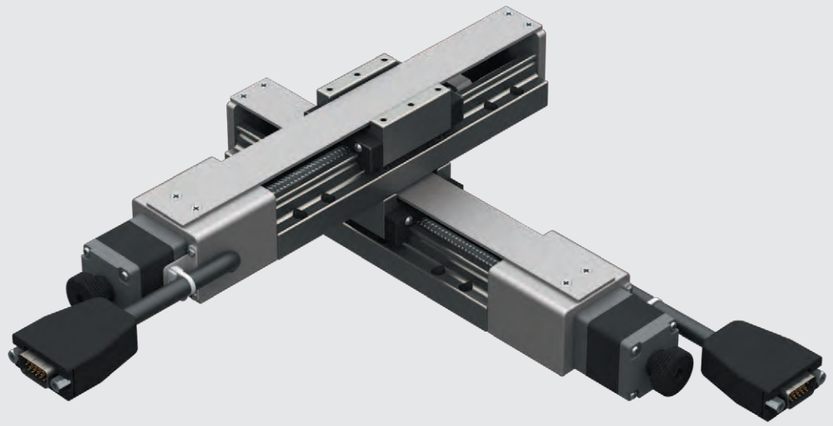

◎ Photos are CYN5075-S1VN-ND(UP) and CYC5075-S1VN-ND(DOWN).

CYN50□ / CYC50□-S series-V-Teeth lead screw Design

CYN50□-S1VN-ND

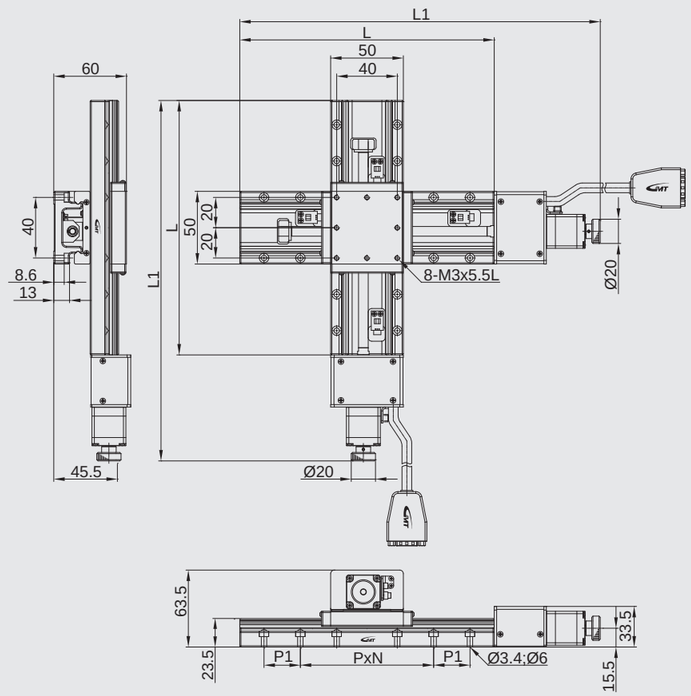

Stroke	L	L1	P	N	P1
50	120	217.5	40	3	N/A
75	145	242.5	40	3	N/A

CYC50□-S1VN-ND

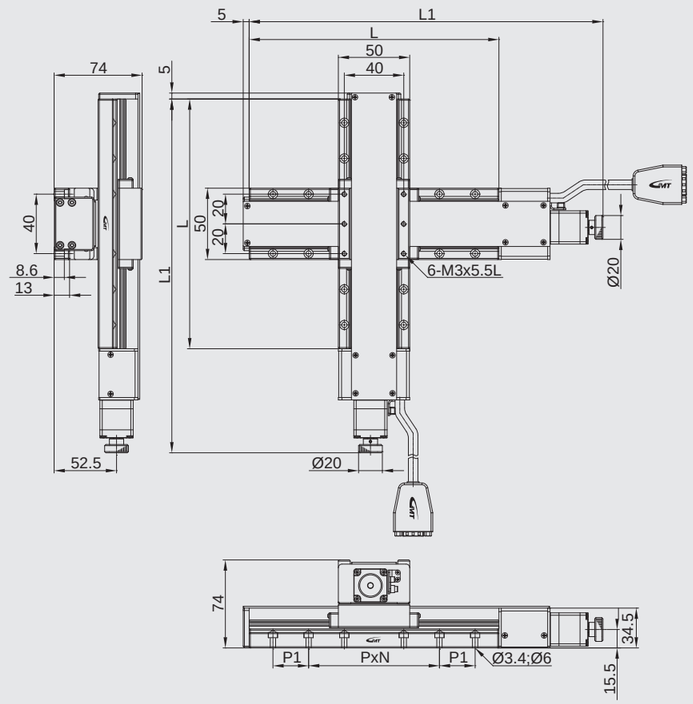

Stroke	L	L1	P	N	P1
50	120	217.5	40	3	N/A
75	145	242.5	40	3	N/A

Model description CYN60□ / CYC60□-S series

Material	
S	Stainless Steel

Drive type	
1	V-Teeth lead screw

Accuracy level	
V	Standard grade

Wiring method	
N	GMT Standard

Motor model	
N	2-phase stepper
X	Not equipped

Connector type	
D	D-SUB15 (VGA)

CYN 60 50 - S 1 V N - N D - P1 2 C

Axis & serial numbers	
CYN	X axis (w/o cover)
CYC	X axis (w/cover)

Table size	
60	60*60mm

Stroke	
50	50mm
75	75mm

Ball screw pitch	
P1	1mm
P2	2mm

Connecting cable (optional)	
Blank	Not equipped
2	2m cable*1
4	4m cable*1

*1 (D-SUB 15 pin female connector + the other side with discrete wirings)

Driver (optional)	
Blank	Not equipped
C	Standard specified by GMT

Model description			CYN6050-S1VN-ND-P1	CYN6050-S1VN-ND-P2	CYN6075-S1VN-ND-P1	CYN6075-S1VN-ND-P2
			CYC6050-S1VN-ND-P1	CYC6050-S1VN-ND-P2	CYC6075-S1VN-ND-P1	CYC6075-S1VN-ND-P2
Mechanical specifications	Table size		60X60 mm			
	Travel stroke		50 mm		75 mm	
	Drive type		V-Teeth lead screw Ø8 lead 1mm	V-Teeth lead screw Ø8 lead 2mm	V-Teeth lead screw Ø8 lead 1mm	V-Teeth lead screw Ø8 lead 2mm
	Rail		Circular Linear ball guiding			
	Stage material/Surface treatment		Stainless Steel / Nickel plating			
	Main unit weight		N：2.38Kg / C：2.66 Kg		N：2.6 Kg / C：2.88 Kg	
	Coupling		FAMCS10-5*5			
	Accuracy level		N：Standard grade			
	Wiring method		N：GMT Standard*2			
Precision specifications	Resolution (pulse)	Full / Half	5 μm / 2.5 μm	10 μm / 5 μm	5 μm / 2.5 μm	10 μm / 5 μm
	Maximum speed (full step)		10 mm / sec	20 mm / sec	10 mm / sec	20 mm / sec
	Positioning precision		25 μm			
	Repeatability precision		±2 μm			
	Load capacity		12 Kgf			
	Missed step		3 μm			
	Parallelism		20 μm			
	Dynamic straightness		3 μm			
	Dynamic parallelism		10 μm			
Electrical specifications	Motor	Type/Shaft numbers	2-phase stepper / □28 double shafts			
		Brand/ Model	GMT / 2MS-N28D32A			
	Driver brand/Model		GMT / DS2-022A (Additional options)			
	Connector	Stage side connector	15-pin male end connector D-SUB			
		Controller side connector	15-pin female end connector D-SUB (optional)			
	Sensor	Origin sensor	Photoelectric sensor EE-SX498			
		Limit sensor				
		Power voltage	24V±10%			
		Control output	NPN open collector output under 24V 8mA			
		Output control	Testing (sensing): output transistor OFF (closed)			

*2 GMT Standard wiring is defined as the product photo, and not optional available.

XY axis

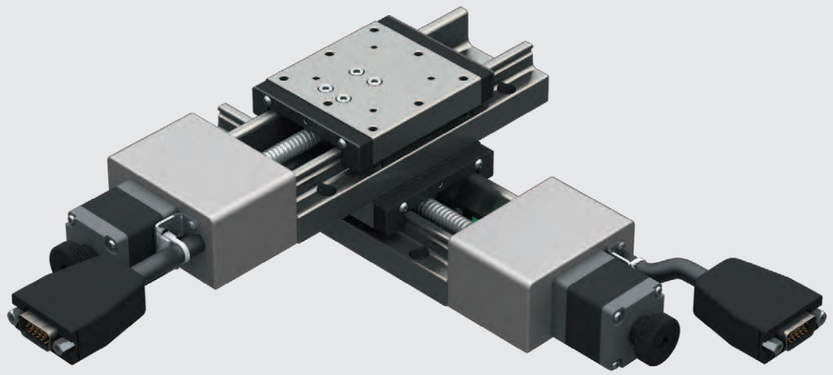

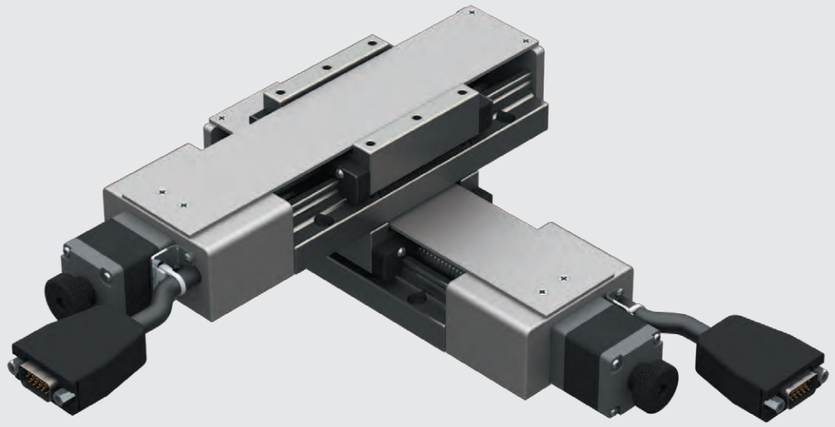

◎ Photos are CYN6075-S1VN-ND(UP) and CYC6075-S1VN-ND(DOWN).

CYN60□-S1VN-ND

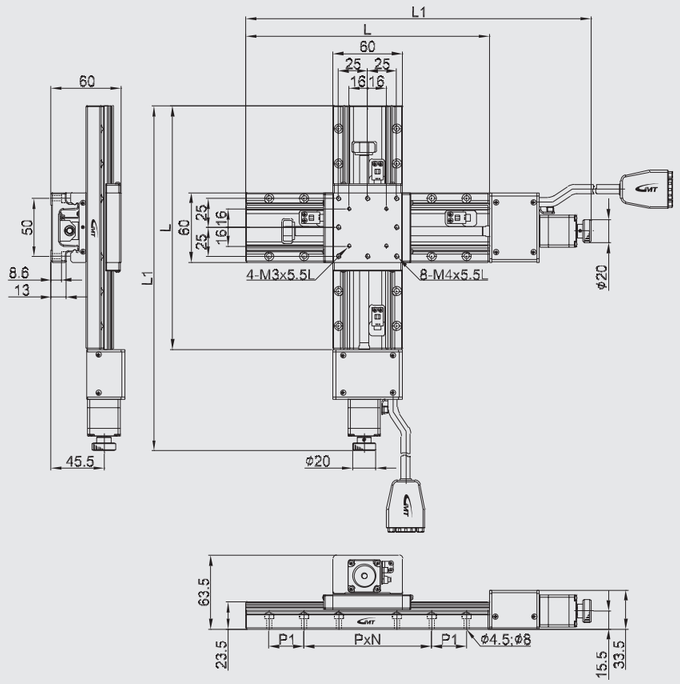

Stroke	L	L1	P	N	P1
50	140	229	50	1	25
75	165	254	50	3	N/A

CYC60□-S1VN-ND

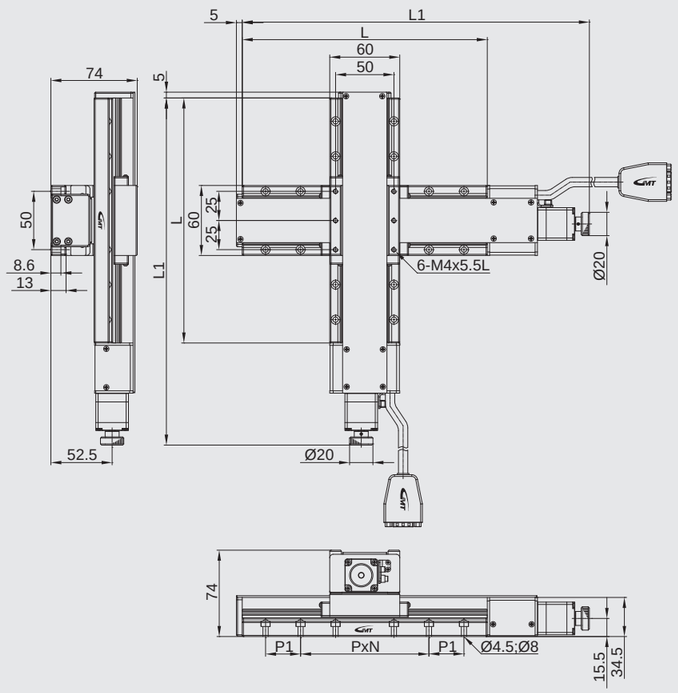

Stroke	L	L1	P	N	P1
50	140	229	50	1	25
75	165	254	50	3	N/A

Model description CYN80□ / CYC80□-S series

Material	
S	Stainless Steel

Drive type	
1	V-Teeth lead screw

Accuracy level	
V	Standard grade

Wiring method	
N	GMT Standard

Motor model	
N	2-phase stepper
X	Not equipped

Connector type	
D	D-SUB15 (VGA)

CYN 80 50 - S 1 V N - N D - P1 2 C

Axis & serial numbers	
CYN	XY axis (w/o cover)
CYC	XY axis (w/cover)

Table size	
80	80*80mm

Stroke	
50	50mm
75	75mm

Ball screw pitch	
P1	1mm
P2	2mm

Connecting cable (optional)	
Blank	Not equipped
2	2m cable*1
4	4m cable*1

Driver (optional)	
Blank	Not equipped
C	Standard specified by GMT

*1 (D-SUB 15 pin female connector + the other side with discrete wirings)

Model Number		CYN8050-S1VN-CD-P1	CYN8050-S1VN-CD-P2	CYN8075-S1VN-CD-P1	CYN8075-S1VN-CD-P2
		CYC8050-S1VN-CD-P1	CYC8050-S1VN-CD-P2	CYC8075-S1VN-CD-P1	CYC8075-S1VN-CD-P2
Mechanical specifications	Table size	80X80 mm			
	Travel stroke	50 mm		75 mm	
	Drive type	V-Teeth lead screw Ø8 lead 1mm	V-Teeth lead screw Ø8 lead 2mm	V-Teeth lead screw Ø8 lead 1mm	V-Teeth lead screw Ø8 lead 2mm
	Rail	Circular Linear ball guiding			
	Stage material/Surface treatment	Stainless Steel / Nickel plating			
	Main unit weight	N：3.36 Kg / C：3.72 Kg		N：3.68 Kg / C：4.06 Kg	
	Coupling	FAMC-S10-S-5*5			
	Accuracy level	V：Standard grade			
	Wiring method	N：GMT Standard*2			
Precision specifications	Resolution (pulse) Full / Half	5 μm / 2.5 μm	10 μm / 5 μm	5 μm / 2.5 μm	10 μm / 5 μm
	Maximum speed (full step)	10 mm / sec	20 mm / sec	10 mm / sec	20 mm / sec
	Positioning precision	25 μm			
	Repeatability precision	±2 μm			
	Load capacity	14 Kgf			
	Missed step	3 μm			
	Parallelism	20 μm			
	Dynamic straightness	3 μm			
	Dynamic parallelism	10 μm			
Electrical specifications	Motor: Type/Shaft numbers	2-phase stepper / □28 double shafts			
	Motor: Brand/ Model	GMT / 2MS-N28D32A			
	Driver brand/Model	GMT / DS2-022A (Additional options)			
	Connector: Stage side connector	15-pin male end connector D-SUB			
	Connector: Controller side connector	15-pin female end connector D-SUB (optional)			
	Sensor: Origin sensor	Photoelectric sensor EE-SX4134			
	Sensor: Limit sensor				
	Sensor: Origin approximation sensor	N/A			
	Sensor: Power voltage	24V±10%			
	Sensor: Control output	NPN open collector output under 24V 8mA			
	Sensor: Output control	Testing (sensing)：output transistor OFF (closed)			

*2 GMT Standard wiring is defined as the product photo, and not optional available.

Standard Motorized **XY axis** Linear-motion Stage ▶ **Circular linear ball guiding**
CYN80□ / CYC80□-S series-V-Teeth lead screw Design
GMT GLOBAL INC.

XY axis

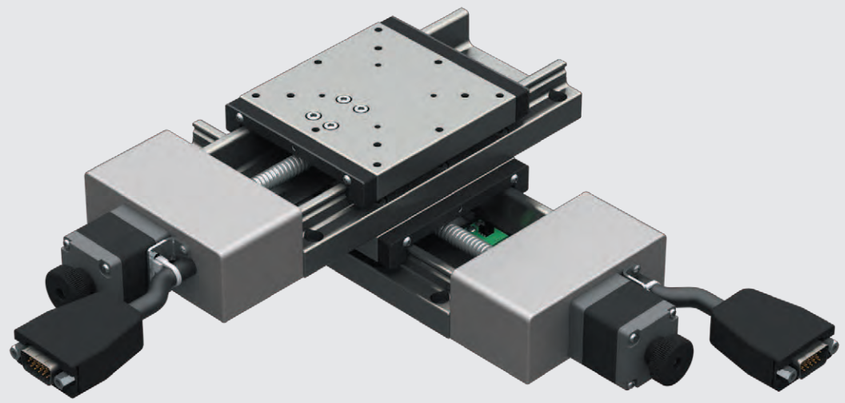

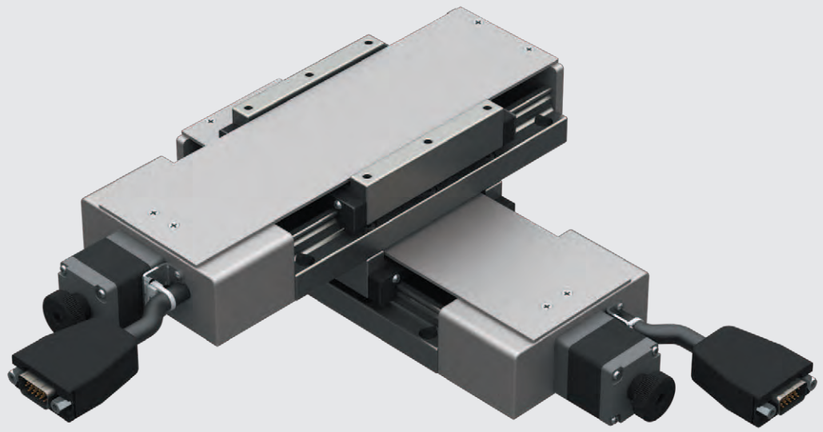

◎ Photos are CYN8075-S1VN-ND(UP) and CYC8075-S1VN-ND(DOWN).

CYN80□ / CYC80□-S series-V-Teeth lead screw Design

CYN80□-S1VN-ND

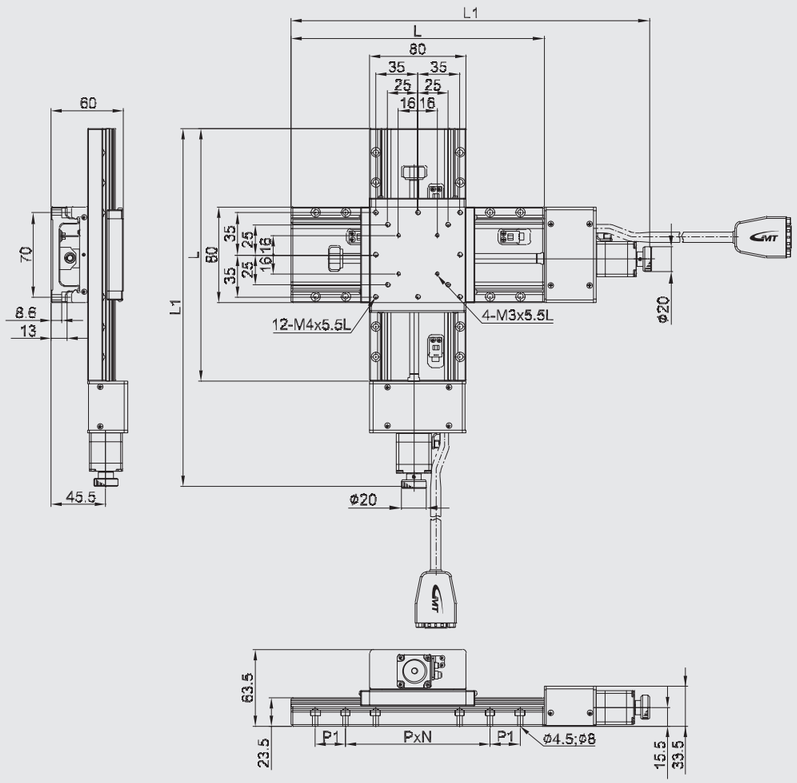

Stroke	L	L1	P	N	P1
50	160	247.5	35	4	N/A
75	185	272.5	35	4	N/A

CYC80□-S1VN-ND

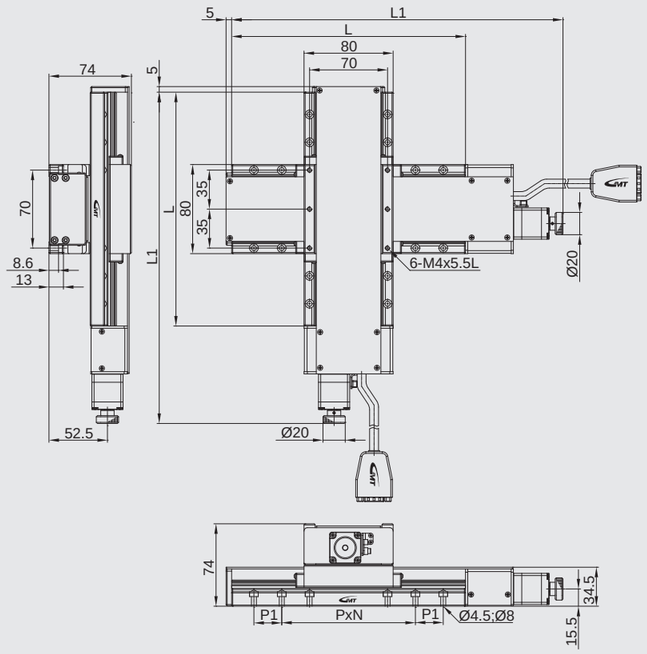

Stroke	L	L1	P	N	P1
50	160	247.5	35	4	N/A
75	185	272.5	35	4	N/A

Standard Motorized Stage – 6-axis assembly application explanation (axis & stroke)

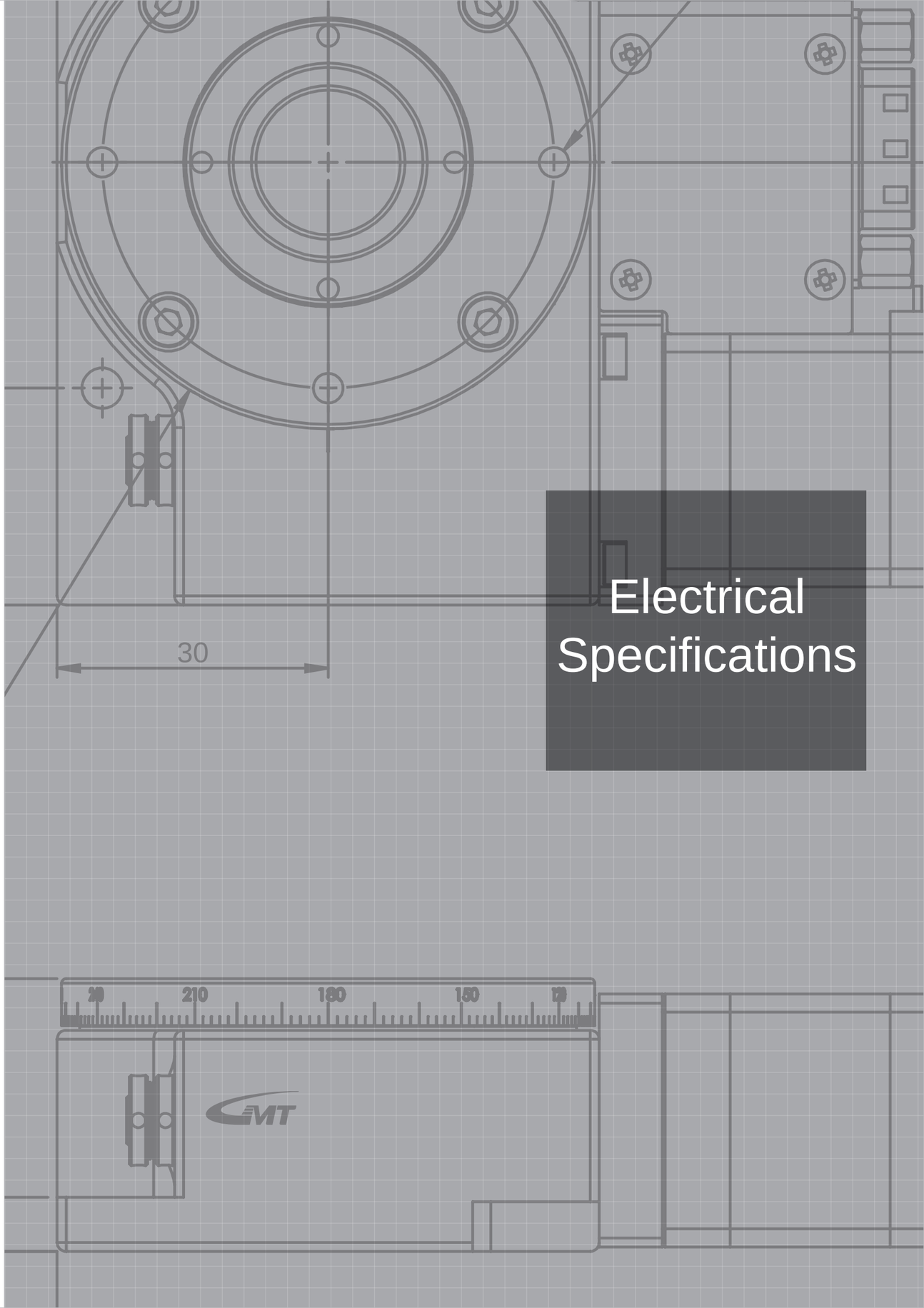

Electrical specifications

Male end connector PIN layout & definition

Models	40&60
	AX-A、AY-A

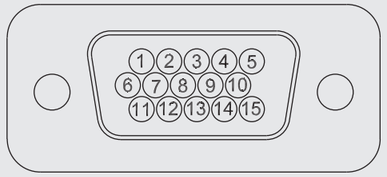

Wiring diagram

1	Motor lead A
2	Motor lead Ā
3	Motor lead B
4	Motor lead B̄
5	Not used
6	CWLS output
7	CCWLS output
8	Not used
9	Power input(DC+24V)
10	Stage travel stroke ORG1 output
11	Power input(DC 0V)
12	Ground
13	Not used
14	Not used
15	Not used

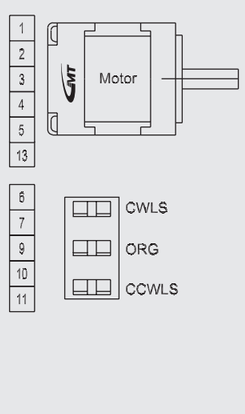

Sequence diagram

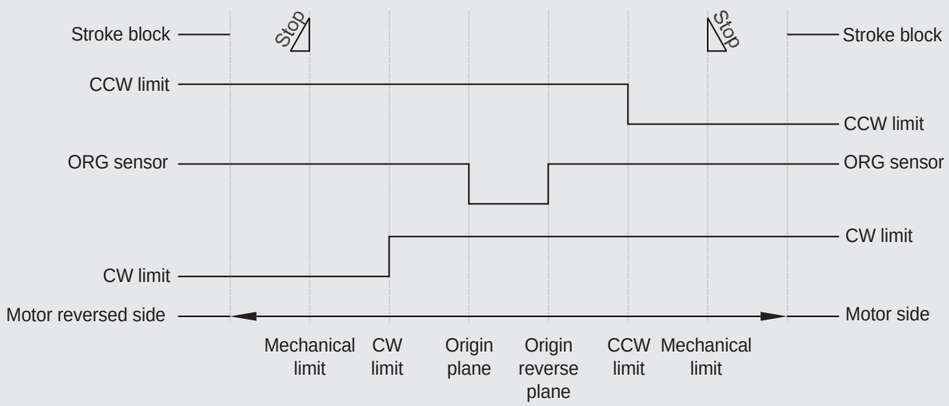

Electrical specifications

Male end connector PIN layout & definition

Models	80&100&120
	AX-A、AY-A

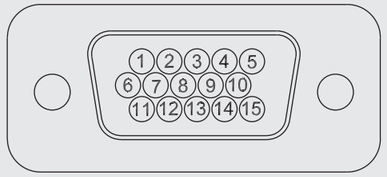

Wiring diagram

1	Motor lead A
2	Motor lead Ā
3	Motor lead B
4	Motor lead B̄
5	Not used
6	CWLS output
7	CCWLS output
8	Motor rotary ORG2 output
9	Power input(DC+24V)
10	Stage travel stroke ORG1 output
11	Power input(DC 0V)
12	Ground
13	Not used
14	Not used
15	Not used
16	Not used

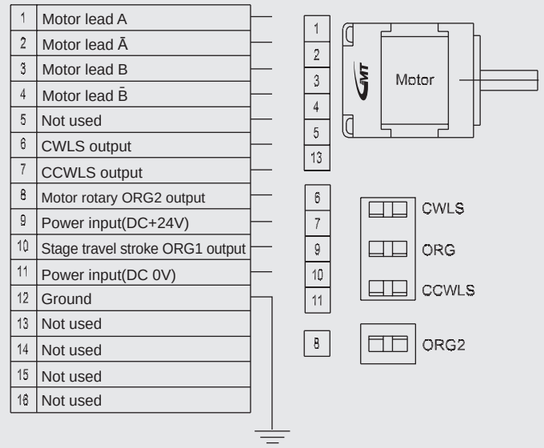

Sequence diagram

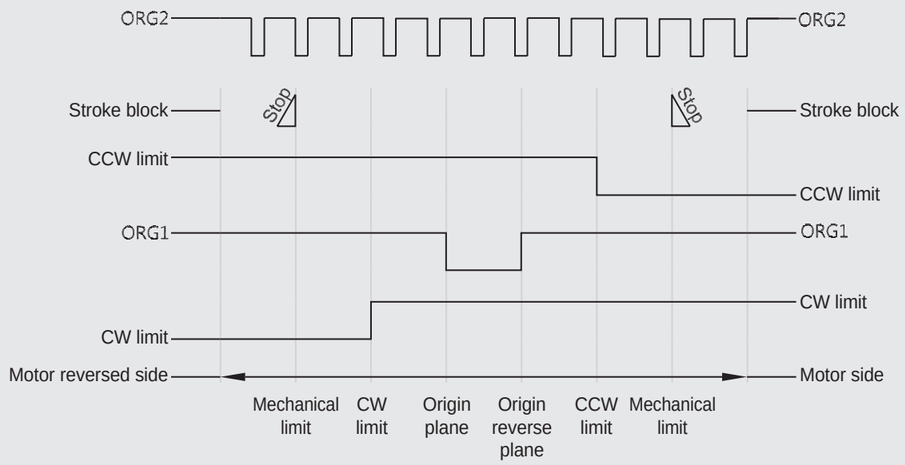

Electrical specifications

Male end connector PIN layout & definition

Models: AX-F、AY-F

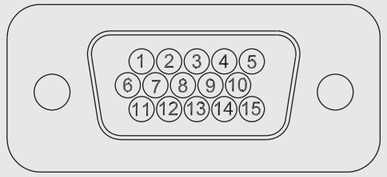

Wiring diagram

1	Motor lead A
2	Motor lead Ā
3	Motor lead B
4	Motor lead B̄
5	Not used
6	CWLS output
7	CCWLS output
8	Not used
9	Power input(DC+24V)
10	Stage travel stroke ORG1 output
11	Power input(DC 0V)
12	Ground
13	Not used
14	Not used
15	Not used

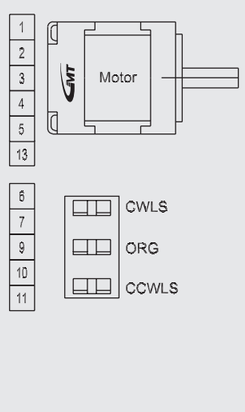

Sequence diagram

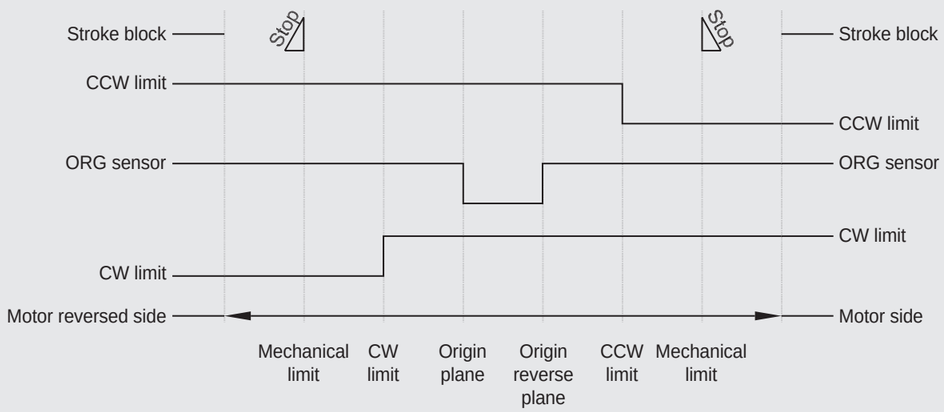

Electrical specifications

Male end connector PIN layout & definition

Models: CXS、CYS

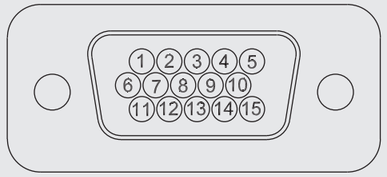

Wiring diagram

1	Motor lead A
2	Motor lead Ā
3	Motor lead B
4	Motor lead B̄
5	Not used
6	CWLS output
7	CCWLS output
8	Not used
9	Power input(DC+24V)
10	Stage travel stroke ORG1 output
11	Power input(DC 0V)
12	Ground
13	Not used
14	Not used
15	Not used

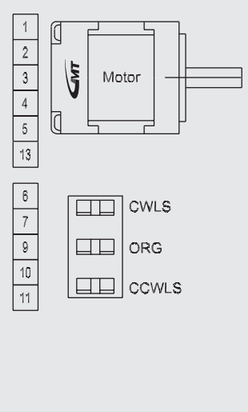

Sequence diagram

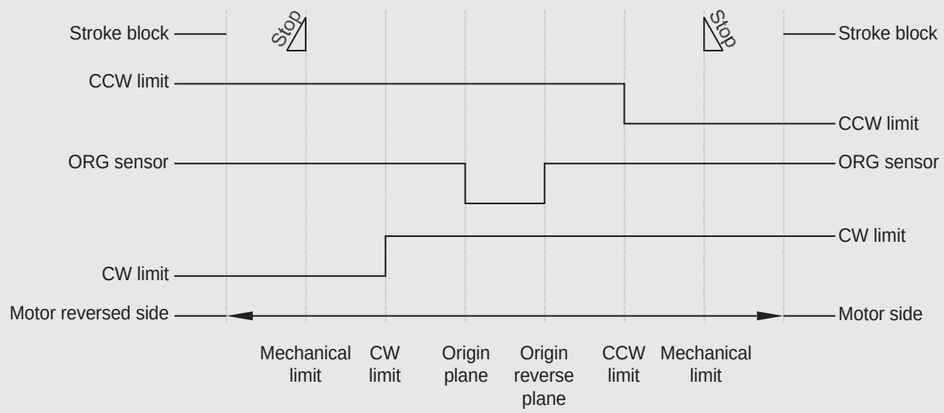

Electrical specifications

Male end connector PIN layout & definition

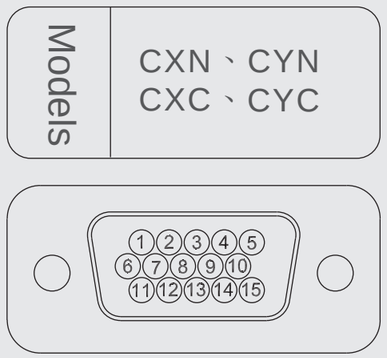

Wiring diagram

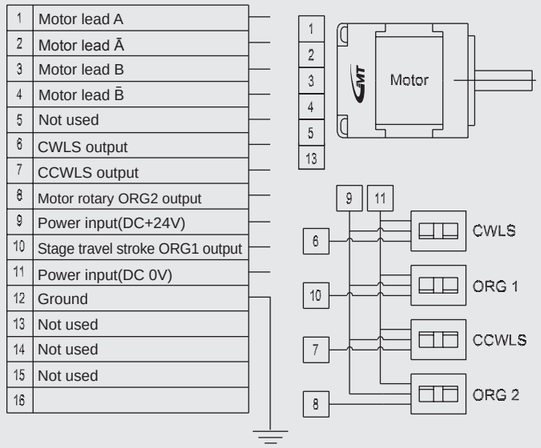

Sequence diagram

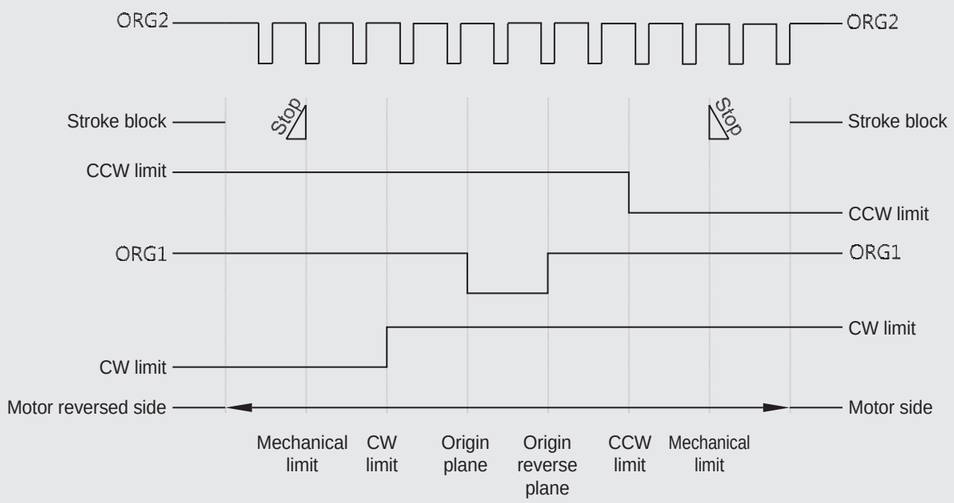

Electrical specifications

Male end connector PIN layout & definition

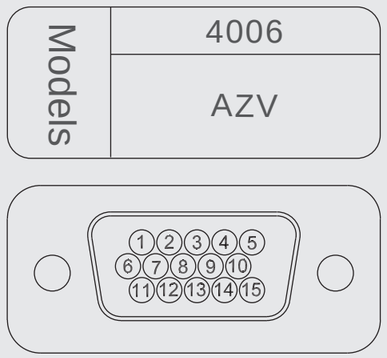

Wiring diagram

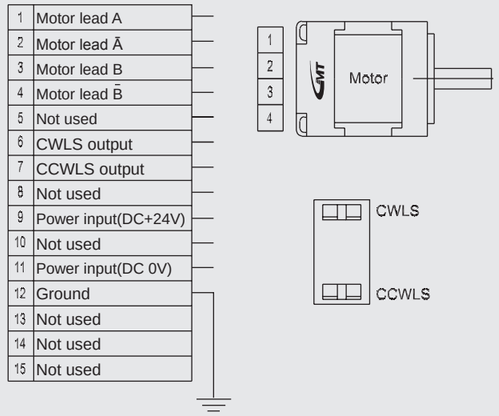

Sequence diagram

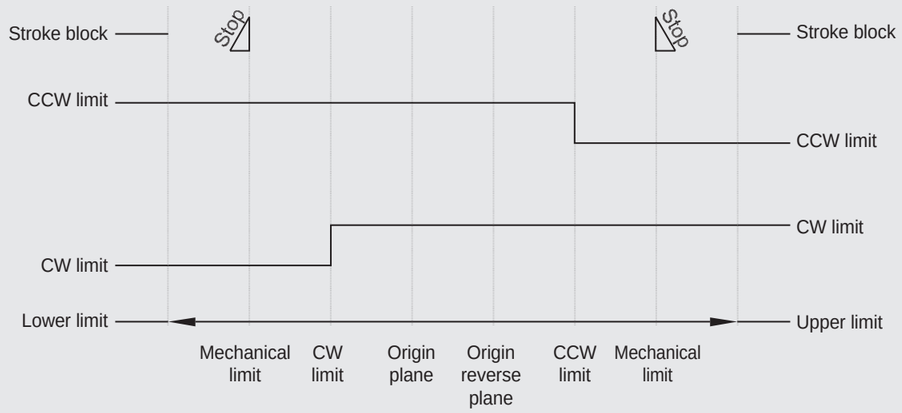

Electrical specifications

Male end connector PIN layout & definition

Models	
	6008&8010
	AZV

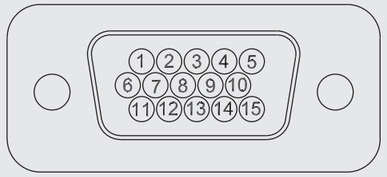

Wiring diagram

1	Motor lead A
2	Motor lead Ā
3	Motor lead B
4	Motor lead B̄
5	Not used
6	CWLS output
7	CCWLS output
8	Not used
9	Power input(DC+24V)
10	Stage travel stroke ORG1 output
11	Power input(DC 0V)
12	Ground
13	Not used
14	Not used
15	Not used

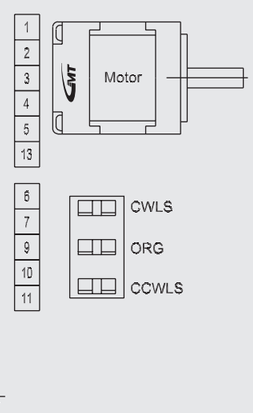

Sequence diagram

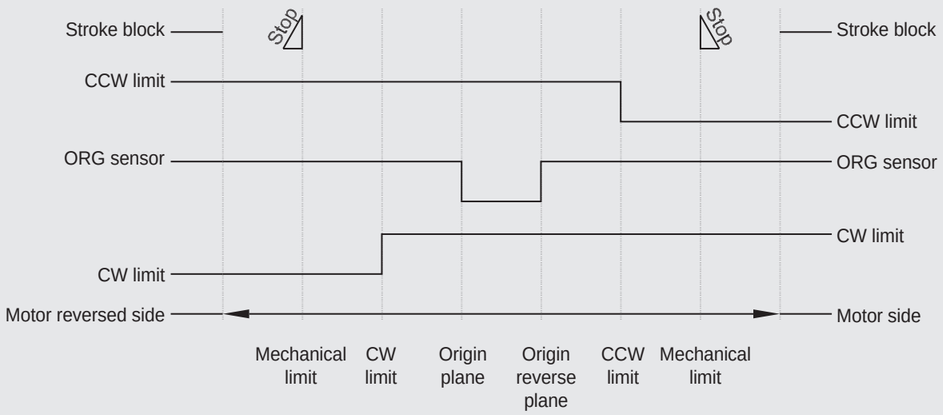

Electrical specifications

Male end connector PIN layout & definition

Models	
	AXG

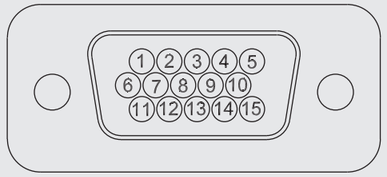

Wiring diagram

1	Motor lead A
2	Motor lead Ā
3	Motor lead B
4	Motor lead B̄
5	Not used
6	CWLS output
7	CCWLS output
8	Not used
9	Power input(DC+24V)
10	Stage travel stroke ORG1 output
11	Power input(DC 0V)
12	Ground
13	Not used
14	Not used
15	Not used

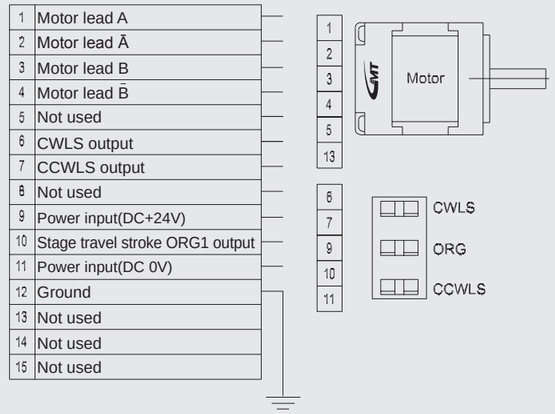

Sequence diagram

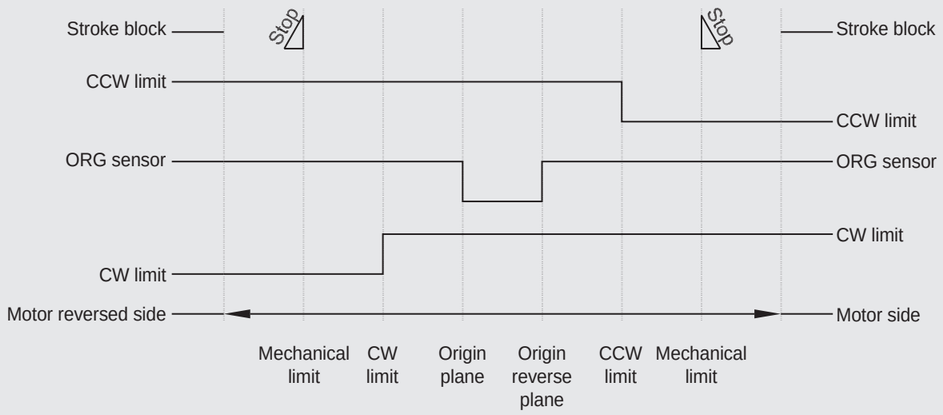

Electrical specifications

Male end connector PIN layout & definition

Models	39&59&80&100
	AR

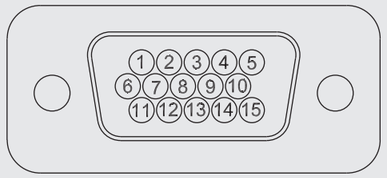

Wiring diagram

1	Motor lead A
2	Motor lead Ā
3	Motor lead B
4	Motor lead B̄
5	Not used
6	Not used
7	Not used
8	Not used
9	Power input(DC+24V)
10	Stage travel stroke ORG1 output
11	Power input(DC 0V)
12	Ground
13	Not used
14	Not used
15	Not used

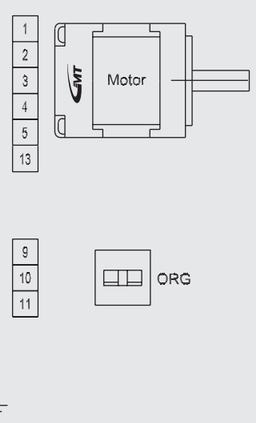

Sequence diagram

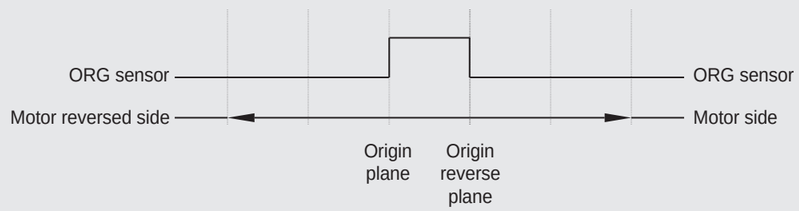

Electrical specifications

Male end connector PIN layout & definition

Models	AX-A、AY-A

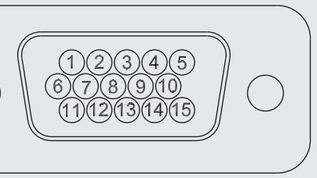

Wiring diagram

1	Motor lead A
2	Motor lead Ā
3	Motor lead B
4	Motor lead B̄
5	Not used
6	CWLS output
7	CCWLS output
8	Not used
9	Power input(DC+24V)
10	Stage travel stroke ORG1 output
11	Power input(DC 0V)
12	Ground
13	Not used
14	Not used
15	Not used

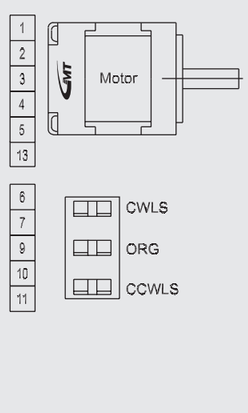

Sequence diagram

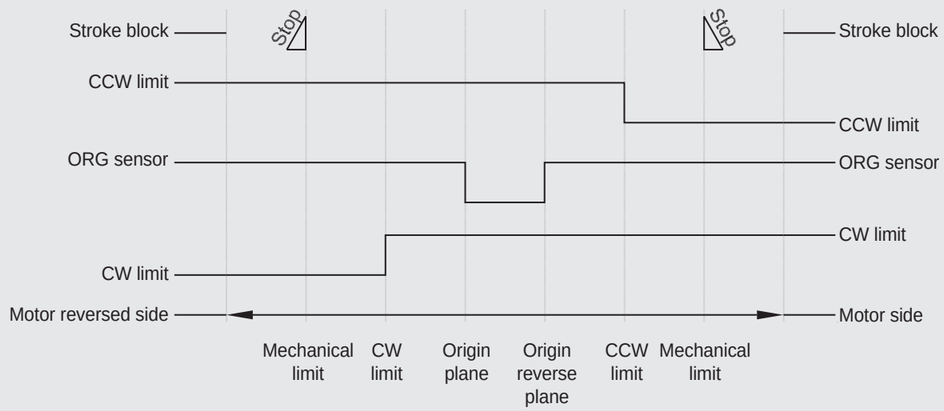

Electrical specifications

Male end connector PIN layout & definition For V-Teeth lead screw Design

Models	AX-F、AY-F

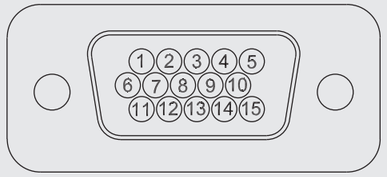

Wiring diagram

1	Motor lead A
2	Motor lead Ā
3	Motor lead B
4	Motor lead B̄
5	Not used
6	CWLS output
7	CCWLS output
8	Not used
9	Power input(DC+24V)
10	Stage travel stroke ORG1 output
11	Power input(DC 0V)
12	Ground
13	Not used
14	Not used
15	Not used

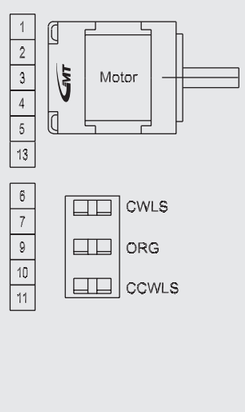

Sequence diagram

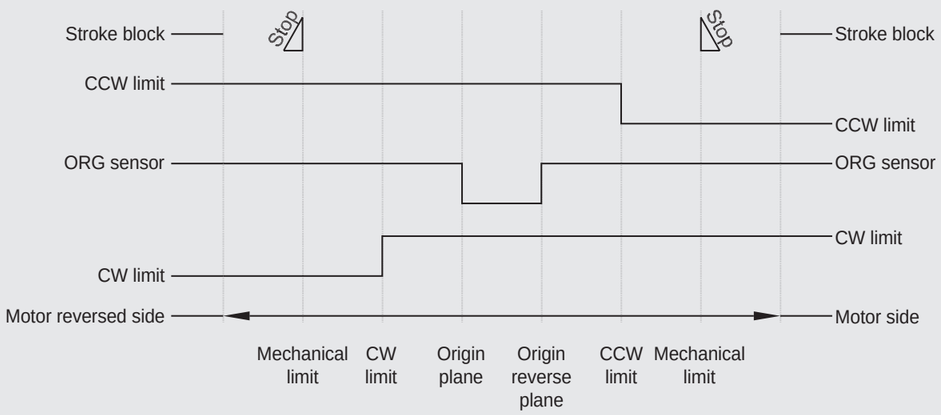

Electrical specifications

Male end connector PIN layout & definition For V-Teeth lead screw Design

Models	CXS、CYS

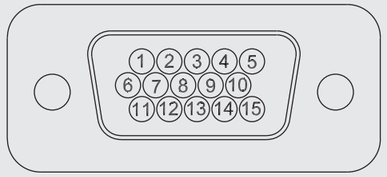

Wiring diagram

1	Motor lead A
2	Motor lead Ā
3	Motor lead B
4	Motor lead B̄
5	Not used
6	CWLS output
7	CCWLS output
8	Not used
9	Power input(DC+24V)
10	Stage travel stroke ORG1 output
11	Power input(DC 0V)
12	Ground
13	Not used
14	Not used
15	Not used

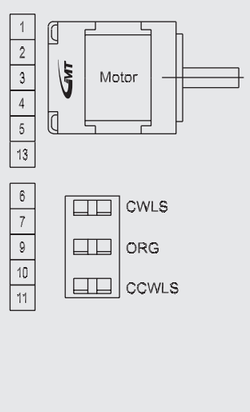

Sequence diagram

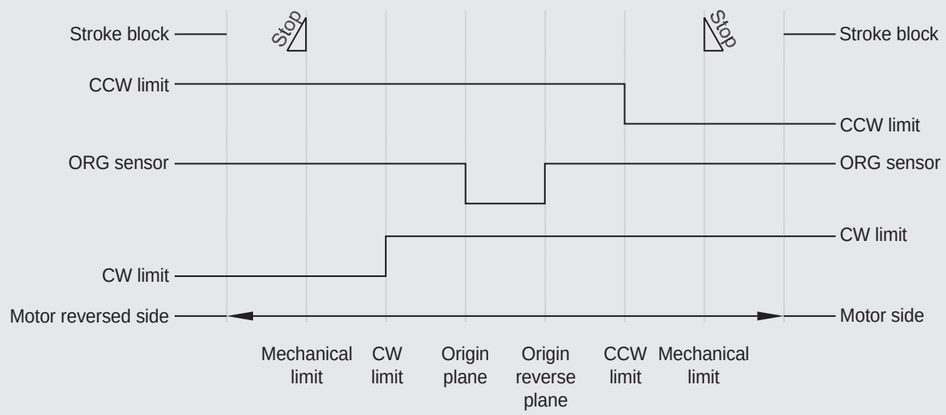

Electrical specifications

Male end connector PIN layout & definition For V-Teeth lead screw Design

Models	CXN、CYN CXC、CYC

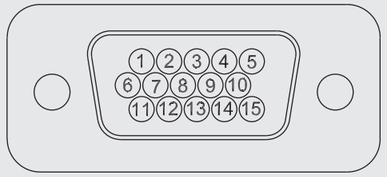

Wiring diagram

1	Motor lead A
2	Motor lead Ā
3	Motor lead B
4	Motor lead B̄
5	Not used
6	CWLS output
7	CCWLS output
8	Motor rotary ORG2 output
9	Power input(DC+24V)
10	Stage travel stroke ORG1 output
11	Power input(DC 0V)
12	Ground
13	Not used
14	Not used
15	Not used
16	Not used

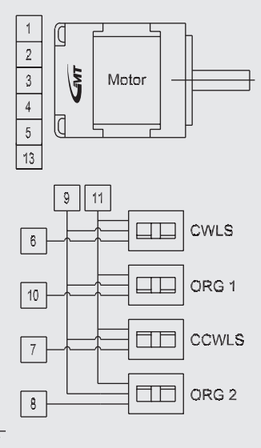

Sequence diagram

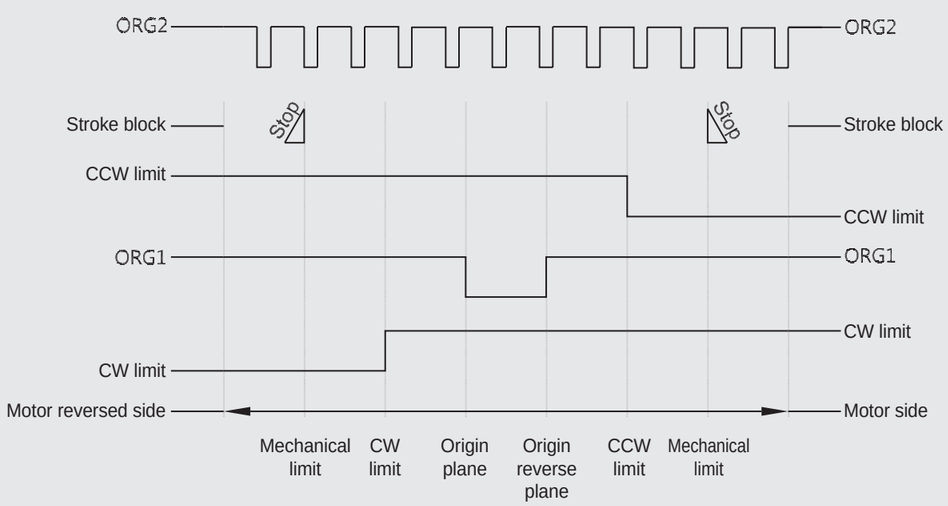

Designated stage connector

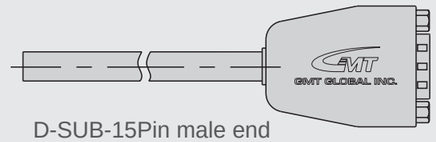

D-SUB-15Pin male end

- For **GMT** full-series motorized stage has been integrated D-SUB connector as default designed connector.
- Standard connecting cable is corresponding connection type for stage side which is including single-sided connector in 2 m long with discrete 15 wires as common accessory stocked for optional purchasing.
- D-SUB standard connecting cable, D-SUB TO HRS converting cable, D-SUB TO NJC converting cable are all optional accessories (sold separately).
- If you use HRS/NJC originally, you can choose D-SUB TO HRS/D-SUB TO NJC converting cable for conversion.
- When standard connecting cable is used, please make insulation treatment on the unused wires at the discrete wire end.
- Connecting cable length over 6 m may cause abnormal operation.
- Minimum bendable radius of connecting cable is 5 times the cable diameter.

Connecting Cable

D-SUB Standard connecting cable

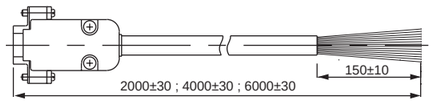

Model: AW1C2A2-2 ; AW1C2A2-4 ; AW1C2A2-6 Unit: mm

Stage side is D-SUB female end				Control side single-sided discrete wire 15 wires
Motor leadA	1	Green line/black spot	1	Control side corresponding connection points
Motor leadB	2	Green line/red spot	2	
Motor leadC	3	Pink line/black spot	3	
Motor leadD	4	Pink line/red spot	4	
Motor leadE	5	Blue line/black spot	5	
CWLS output	6	Blue line/red spot	6	
CCWLS output	7	White line/black spot	7	
Motor rotary ORG2 output	8	White line/red spot	8	
Power input(+)	9	Gray line/black spot	9	
Stage travel stroke ORG1 output	10	Gray line/red spot	10	
Power input(-)	11	Yellow line/black spot	11	
Ground ⏚	12	Yellow line/red spot	12	
Not used	13	Not used	13	
Not used	14	Not used	14	
Not used	15	Not used	15	

Connecting Cable

D-SUB TO NJC converting cable

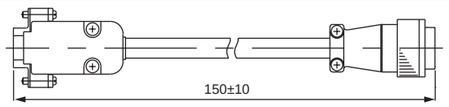

Model: AW2C2L4-0.15 Unit: mm

Stage side D-SUB female end			Control side NJC male end
Motor leadA	1	Green line/black spot 1	Motor leadA
Motor leadB	2	Green line/red spot 2	Motor leadB
Motor leadC	3	Pink line/black spot 3	Motor leadC
Motor leadD	4	Pink line/red spot 4	Motor leadD
Motor leadE	5	Blue line/black spot 5	Motor leadE
CWLS output	6	Blue line/red spot 6	CWLS output
CCWLS output	7	White line/black spot 8	CCWLS output
Motor rotary ORG2 output	8	White line/red spot 11	Motor rotary ORG2 output
Power input(+)	9	Gray line/black spot 10	Power input(+)
Stage travel stroke ORG1 output	10	Gray line/red spot 14	Stage travel stroke ORG1 output
Power input(-)	11	Yellow line/black spot 15	Power input(-)
Ground ⏚	12	Yellow line/red spot 16	Ground ⏚
Not used	13	Not used 9	Not used
Not used	14	Not used 12	Not used
Not used	15	Not used 13	Not used
		7	Not used

Connecting Cable

D-SUB TO HRS converting cable

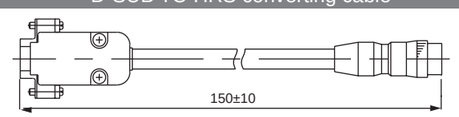

Model: AW2C2G0-0.15 Unit: mm

Stage side D-SUB female end			Control side NJC male end
Motor leadA	1	Green line/black spot 1	Motor leadA
Motor leadB	2	Green line/red spot 2	Motor leadB
Motor leadC	3	Pink line/black spot 3	Motor leadC
Motor leadD	4	Pink line/red spot 4	Motor leadD
Motor leadE	5	Blue line/black spot 5	Motor leadE
CWLS output	6	Blue line/red spot 6	CWLS output
CCWLS output	7	White line/black spot 7	CCWLS output
Motor rotary ORG2 output	8	White line/red spot 8	Motor rotary ORG2 output
Power input(+)	9	Gray line/black spot 9	Power input(+)
Stage travel stroke ORG1 output	10	Gray line/red spot 10	Stage travel stroke ORG1 output
Power input(-)	11	Yellow line/black spot 11	Power input(-)
Ground ⏚	12	Yellow line/red spot 12	Ground ⏚
Not used	13		
Not used	14		
Not used	15		

Standard model equipped	Motor type / Shaft type	(Taiwan brand) 2-phase stepper motor/Double shaft			
	Motor manufacturer	GMT			
	Motor model	2MS-N28D32A	2MS-N28D45A	2MS-N35D36A	2MS-N42D47A
	Rated current	0.67A	0.67A	1.0A	1.68A
	Size	□28x31.3	□28x45	□35x36	□42x47
	Step angle	1.8°			
	Excitation maximum static torque	0.06N-m	0.09N-m	0.14N-m	0.44N-m
	Rotor inertia (Kg*m^2)	0.9x10^{-4}	0.12x10^{-4}	1.4x10^{-4}	6.8x10^{-4}
	Driver model (optional)	GMT			
	Driver model (optional)	GTR22G-D			
		DS2-022A			DS2-032A
Recommended	Motor type / Shaft type	2-phase stepper motor/Double shaft			
	Motor manufacturer	TAMAGAWA		SANYO	TAMAGAWA
	Motor model	TS3641N11E2	TS3641N12E3	SH3537-12U10	TS3617N13E8
	Rated current	1.5A	1.4A	1.2A	1.2A
	Size	□28x33	□28x47.5	□35x37	□42x47
	Step angle	1.8°			
	Excitation maximum static torque	0.05N-m	0.09N-m	0.15N-m	0.32N-m
	Rotor inertia (Kg*m^2)	0.008x10^{-4}	0.018x10^{-4}	10.025x10^{-4}	0.068x10^{-4}
	Driver Manufacture (optional)	GMT			
	Driver model (optional)	GTR24-M2			
Applicable platform(Only list single-axle model)	Standard type	AR39-A3E AR59-A3E AR80-A3E AX40-F2N AX60-F2N AX80-F2N CXS5020-S2N CXS5030-S2N CXS6020-S2N CXS6030-S2N CXS6050-S2N CXS8020-S2N CXS8030-S2N CXS8050-S2N CXN5030-S2N CXN5050-S2N CXN5075-S2N CXN6030-S2N CXN6050-S2N CXN6075-S2N CXN8030-S2N CXN8050-S2N CXN8075-S2N AZ4006-F AZ6008-F AZ8010-F	CXN50100-S2N CXN50150-S2N CXN50200-S2N CXN60100-S2N CXN60150-S2N CXN60200-S2N CXN60250-S2N CXN60300-S2N CXN80100-S2N CXN80150-S2N CXN80200-S2N CXN80250-S2N CXN80300-S2N		AX80-A2N AX100-A2N AX120-A2N
	V-Teeth lead screw Design	AX40-A2N AX60-A2N AX40-F1V AX60-F1V AX80-F1V CXS5020-S1V CXS5030-S1V CXS6020-S1V CXS6030-S1V CXS6050-S1V CXS8020-S1V CXS8030-S1V CXS8050-S1V CXN5050-S1V CXN5075-S1V CXN6050-S1V CXN6075-S1V CXN8050-S1V CXN8075-S1V	CXN50100-S2N CXN60100-S2N CXN80100-S2N	AR100-A3E AXG6-35CSW AXG6-60CSW AXG6-80CSW	

※ 2-phase stepper motor is the specification selected in standard grade, and Japanese stepping motor is listed as reference only.
※ The most preferred driver is recommended to be specified by GMT as considerations.

Recommended	Motor type / Shaft type	5-phase stepper motor/Double shaft				
	Motor manufacturer	N/A	N/A	N/A	TAMAGAWA	
	Motor model				TS36667N13E7	TS36667N11E3
	Rated current				0.75A	1.4A
	Size				□42X47	□42X33
	Step angle				0.72°	
	Excitation maximum static torque				0.24 N-m	0.13 N-m
	Rotor inertia (Kg*m²)				0.068×10^{-4}	0.035×10^{-4}
	Driver Manufacture (optional)				GMT	
	Driver model (optional)				GTR24M2	
Recommended	Motor type / Shaft type	2-phase stepper motor/Double shaft				
	Motor manufacturer	TAMAGAWA		SANYO	TAMAGAWA	
	Motor model	TS3641N11E2	TS3641N12E3	SH3537-12U10	TS3617N13E8	TS3617N11E1
	Rated current	1.5A	1.4A	1.2A		0.95A
	Size	□28X33	□28X47.5	□35X37	□42X47	□42X33
	Step angle	1.8°				
	Excitation maximum static torque	0.05 N-m	0.09 N-m	0.15N-m	0.32 N-m	0.16 N-m
	Rotor inertia (Kg*m²)	0.008×10^{-4}	0.018×10^{-4}	0.025×10^{-4}	0.068×10^{-4}	0.035×10^{-4}
	Driver Manufacture (optional)	GMT				
	Driver model (optional)	GTR24M2				
Recommended	Motor type / Shaft type	2-phase stepper motor/Double shaft				
	Motor manufacturer	SANYO	SANYO	N/A	SANYO	SANYO
	Motor model	SH2281-5231	SH2285-5231		103H5210-0410	103H5205-0410
	Rated current	1A			1.2A	
	Size	□28X32	□ 28X51.5		□42X48	□42X34
	Stepping angle	1.8			1.8°	
	Excitation maximum static torque	0.07 N-m	0.145 N-m		0.37 N-m	0.2 N-m
	Rotor inertia (Kg*m²)	0.01×10^{-4}	0.022×10^{-4}		0.074×10^{-4}	0.035×10^{-4}
	Driver Manufacture (optional)	GMT			GMT	
	Driver model (optional)	GTR24M2			GTR24M2	

※ 2-phase stepper motor of Japanese brand is alternative specification suggested for standard grade motorized stage optional reference only.

※ The most preferred driver is recommended to be specified by GMT as considerations. For different needs, please choose the suitable driver based on real functional needs.

※ The motorized stage performance might not meet specified on the catalogue.

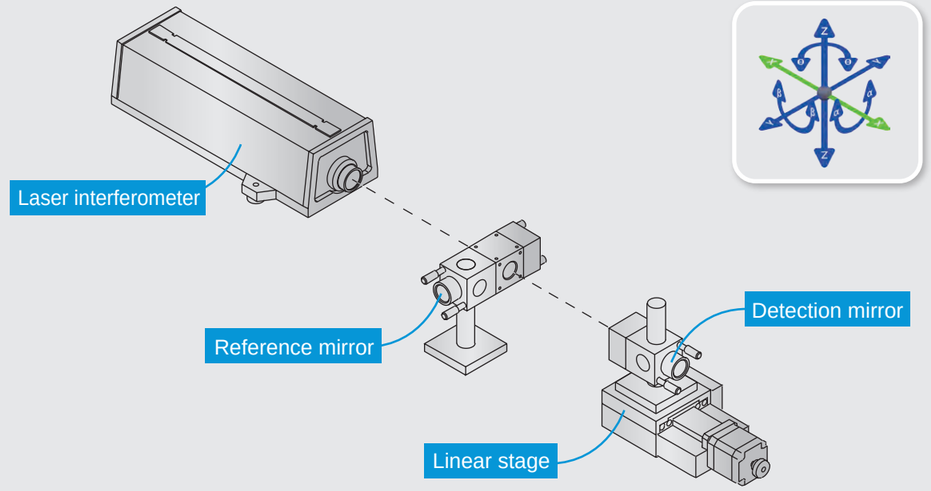

Testing equipment: laser interferometer, Zeiss coordinate measuring machine.
In testing, fix the stage bottom board and move the stage workbench.

Positioning precision (unit: μm)

Within predetermined testing range, from the starting position, move and position in a specific direction and measure the difference between actual value and target value. Use the maximum difference as positioning precision.

Repeatability positioning precision (unit: ±μm)

Use laser interferometer or Zeiss coordinate measuring machine (CMM) to repeat measurement for seven times. With half of the obtained maximum error from the error based on one direction to any point stop, measure in the middle point of movement distance and in the directions of two ends and obtain the maximum difference as the repeatability positioning precision.

Missed step (lost stroke at reverse rotation) (unit: μm)

Within predetermined testing range, from the origin, make movement positioning for any point from positive direction command, measure actual movement value; make negative direction command (same pulse number) for movement positioning and measure actual movement value; make positive direction (same pulse number) command for movement positioning and measure actual movement value.
Make positive direction and negation direction movement seven times and measure the individual actual movement values. The average will be the missed step.

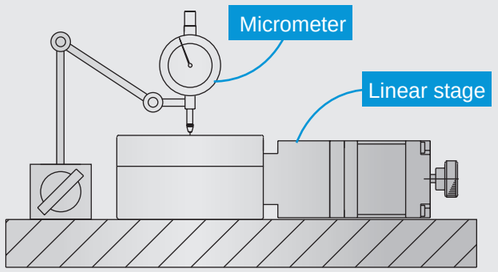

Testing equipment: micrometer.

In testing, fix stage and move meter.

Parallelism (unit: μm)

Put the stage on granite workbench. Use micrometer or Zeiss coordinate measuring machine (CMM) for measurement. At the middle of stage work area, use the measured maximum difference as the parallelism.

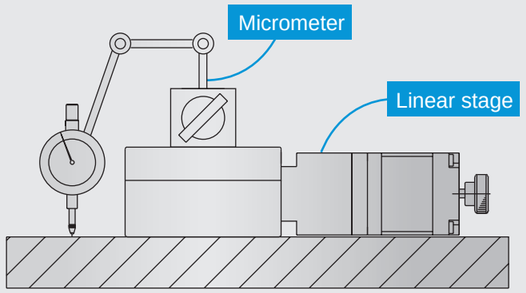

Testing equipment: micrometer.

In testing, fix stage and move stage workbench.

Dynamic parallelism (unit: μm)

Put the stage on granite workbench. Set micrometer on the workbench and measure on granite. The measured maximum difference is the Dynamic parallelism.

Standard Motorized ▶ Linear-motion stage ▶ Testing method (X axis, Y axis)
GMT GLOBAL INC.

Standard Motorized
Linear-motion stage
Testing method (X axis, Y axis)

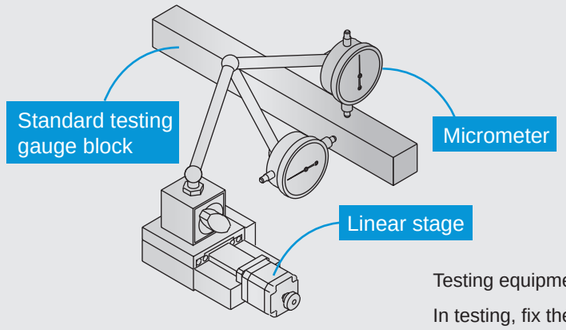

Testing equipment: micrometer.

In testing, fix the stage bottom board and move the stage workbench.

Dynamic straightness (unit: μm)

Within predetermined testing range, from the starting position of stage, move in a specific direction and use standard gauge block as basis to measure the difference between actual value and target value for horizontal straightness and vertical straightness. Use the maximum difference a Dynamic straightness.

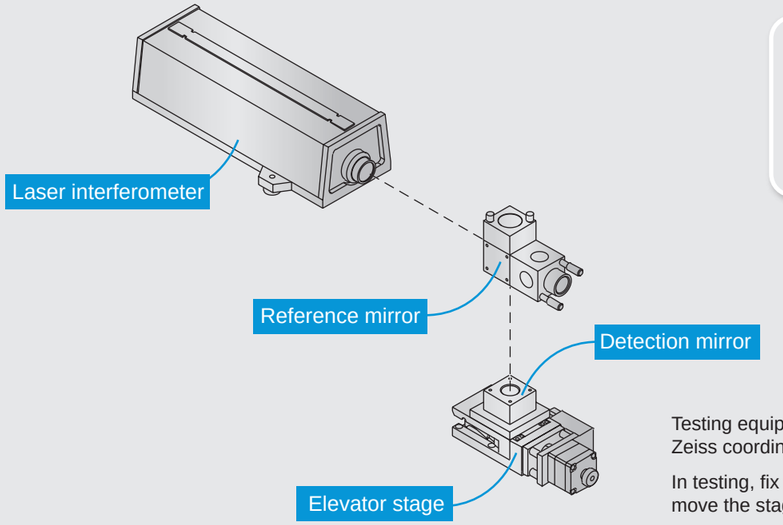

Testing equipment: laser interferometer, Zeiss coordinate measuring machine.

In testing, fix the stage bottom board and move the stage workbench.

One-way remove positioning precision (unit: μm)

Within predetermined testing range, from the starting position, move and position in a specific direction and measure the difference between actual value and target value. Use the maximum difference as positioning precision.

Repeated remove positioning precision (unit: μm)

Use laser interferometer or Zeiss coordinate measuring machine (CMM) to repeat measurement for seven times. With half of the obtained maximum error from the error based on one direction to any point stop, measure in the middle point of movement distance and in the directions of two ends and obtain the maximum difference as the repeated positioning precision.

Missed step (lost stroke at reverse rotation) (unit: μm)

Within predetermined testing range, from the origin, make movement positioning for any point from positive direction command, measure actual movement value; make negative direction command (same pulse number) for movement positioning and measure actual movement value; make positive direction (same pulse number) command for movement positioning and measure actual movement value.
Make positive direction and negation direction movement seven times and measure the individual actual movement values. The average will be the missed step.

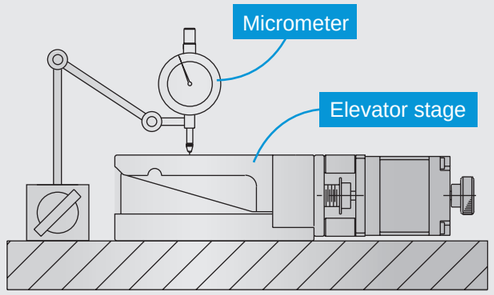

Testing equipment: micrometer.

In testing, fix stage and move meter.

Parallelism (unit: μm)

Put the stage on granite workbench. Use micrometer or Zeiss coordinate measuring machine (CMM) for measurement. At the middle of stage work area, use the measured maximum difference as the parallelism.

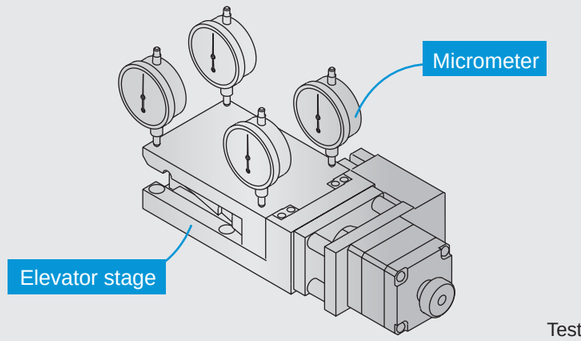

Testing equipment: micrometer.

In testing, fix the stage bottom board and move the stage workbench.

Dynamic parallelism (unit: μm)

Within predetermined testing range, from a stage starting position, move in a specific direction and measure the difference between actual value and target value. Use the maximum difference as Dynamic parallelism.

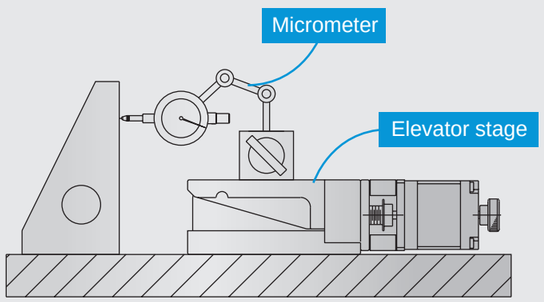

Testing equipment: micrometer.

In testing, fix stage and move stage workbench.

Dynamic vertical (unit: μm)

Put the stage on granite workbench. Set micrometer on the workbench and measure on the standard gauge block. The measured maximum difference is the Dynamic vertical.

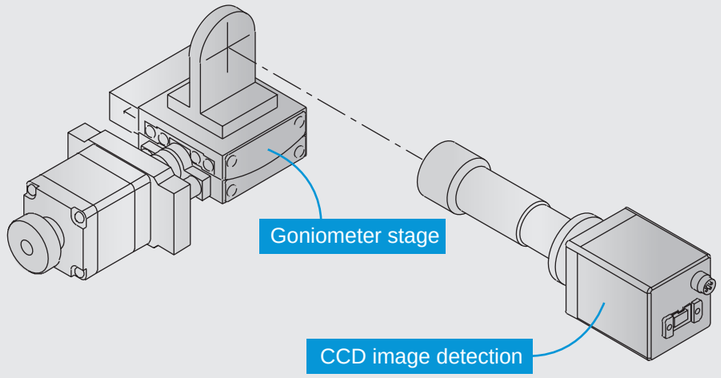

Testing equipment: CCD image detection system, Zeiss coordinate measuring machine.

In testing, fix the stage bottom board and move the stage workbench.

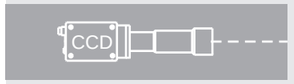

Positioning precision (unit: °)

Within predetermined testing range, from the starting position, move and position in a specific direction and measure the difference between actual value and target value. Use the maximum difference as positioning precision.

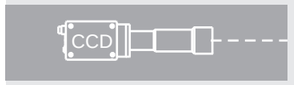

Repeated remove positioning precision (unit: ±°)

According to baseline, set testing standard angle for movement. In clockwise (counterclockwise) direction, fix the angle for positioning and repeat seven measurements. In the same direction, use the half of the maximum difference from any stop point as Repeatability positioning precision value.

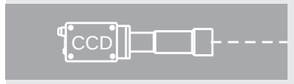

Missed step (lost stroke at reverse rotation) (unit: °)

Select clockwise rotation for angle positioning and set the position x1. Continue counterclockwise rotation for angle positioning and set the position y1. Set arbitrary position for seven measurements. Measure in the middle of movement distance and in the direction of two ends. The obtained maximum is the missed step.

Missed step calculation:

$$\max \left| \frac{(x1+x2+x3\ldots\ldots+x7)}{7} - \frac{(y1+y2+y3\ldots\ldots+y7)}{7} \right|$$

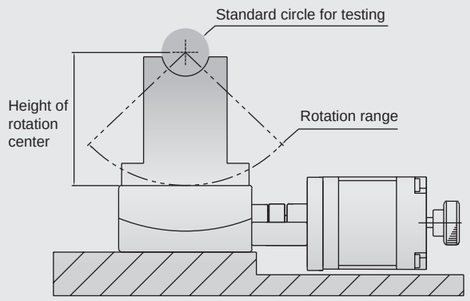

Testing equipment: altimeter, Zeiss coordinate measuring machine.

In testing, fix stage and move meter.

Height of rotation center (unit: mm)

Within predetermined testing range, from a starting position, move in a specific direction and measure and check if the distance from bench to circle center falls within target value, which is the height of rotation center.

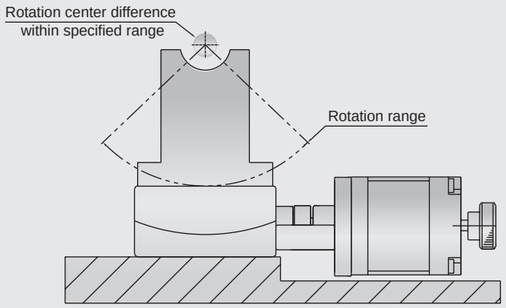

Testing equipment: altimeter, Zeiss coordinate measuring machine.

In testing, fix the stage bottom board and move the stage workbench.

Rotation center deflection precision (unit: mm)

Within predetermined testing range, from a starting position, move in a specific direction and measure and check if the actual circle center falls within target value, which is the rotation center deflection precision.

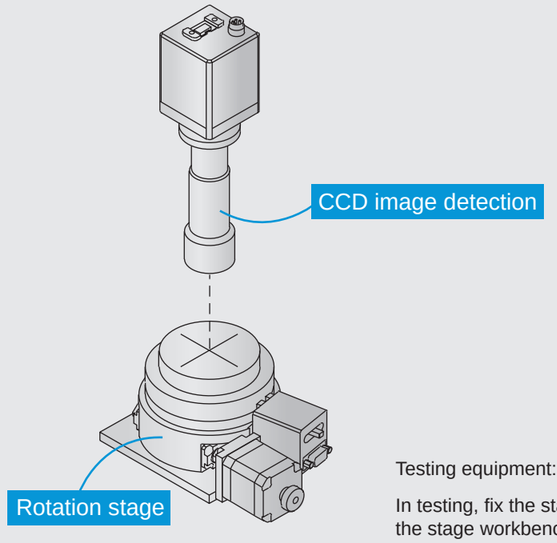

Testing equipment: CCD image detection system.

In testing, fix the stage bottom board and move the stage workbench.

One-way remove positioning precision (unit: °)

According to baseline, set standard angle position for movement plane and fix and position rotation angle in clockwise (counterclockwise) direction. Measure the difference between actual value and target value in 360° rotation. The obtained maximum is the positioning precision.

Repeatability positioning precision (unit: ±°)

Use any angle in clockwise (counterclockwise) direction as standard, measure deviation for stop angle for seven times. With half of the obtained maximum error, in the middle of movement distance and the direction of two ends, obtain the maximum value as the Repeatability positioning precision.

Missed step (lost stroke at reverse rotation) (unit: °)

Select clockwise rotation for angle positioning and set the position x1. Continue counterclockwise rotation for angle positioning and set the position y1. Set arbitrary position for seven measurements. Measure in the middle of movement distance and in the direction of two ends. The obtained maximum is the missed step.

Missed step calculation:

$$\max \left| \frac{(x1+x2+x3\ldots\ldots+x7)}{7} - \frac{(y1+y2+y3\ldots\ldots+y7)}{7} \right|$$

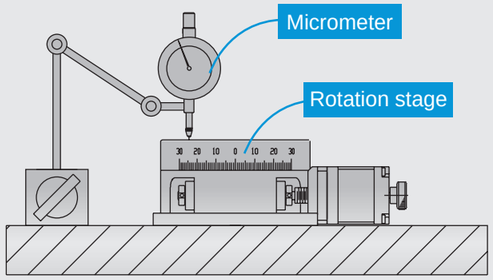

Testing equipment: micrometer.

In testing, fix stage and move meter.

Parallelism (unit: μm)

Put the stage on granite workbench. Use micrometer or Zeiss coordinate measuring machine for measurement. At the middle of stage work area, use the measured maximum difference as the parallelism.

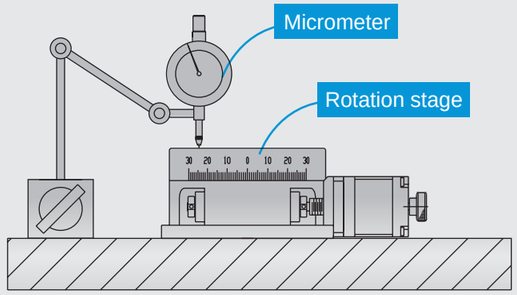

Testing equipment: micrometer.

In testing, fix stage and move stage workbench.

Dynamic parallelism (unit: μm)

Put the stage on granite workbench. Use micrometer on the stage workbench or Zeiss coordinate measuring machine for measurement. As the stage workbench makes one rotation, use the maximum measurement difference as the Dynamic parallelism.

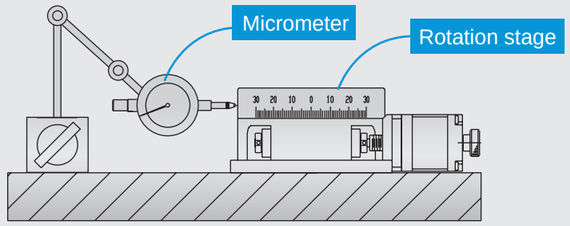

Testing equipment: micrometer.

In testing, fix the stage bottom board and move the stage workbench.

Dynamic concentricity (unit: °)

Within predetermined testing range, from a starting position in the circumference, move in a specific direction and measure the maximum difference between actual value and target value as Dynamic concentricity.