Positioning Stage

4 POSITIONING STAGE 2014

GMT GLOBAL INC.

LASER AND

302-2725 Rue Notre Dame
Montreal, QC, H8S 2H3
CANADA
+1 (514) 452-4693
sales@laserand.com

www.laserand.com

2014.08.01

AC Design 04-27071159

GMT GLOBAL INC.

Product Introduction

Rail trait description ····· P.01～P.02
Stage outline & Feeding mode technical information ····· P.03～P.04
Inspection standard ····· P.05～P.07
Assembly & Installation ····· P.08～P.10
Using caution note ····· P.11～P.12
Model number description ····· P.15
Feeding direction ····· P.16

Crossed roller guide type-Precisioning Stage

X axis and XY-axis stage-Micrometer design

Model specification	Manual X & XY-axis 20-Side / Central	Manual X & XY-axis 25-Side / Central	
Aluminum alloy			P.17 ~ P.20

Model specification	Manual X & XY-axis 30-Side / Central	Manual X & XY-axis 40-Side / Central	
Aluminum alloy			P.21 ~ P.24

Model specification	Manual X & XY-axis 50-Side / Central	Manual X & XY-axis 60-Side / Central	
Aluminum alloy			P.25 ~ P.28

Model specification	Manual X & XY-axis 70-Side / Central	Manual X & XY-axis 80-Side / Central	
Aluminum alloy			P.29 ~ P.32

Model specification	Manual X & XY-axis 100-Side / Central	Manual X & XY-axis 120-Side / Central	
Aluminum alloy			P.33 ~ P.36

Z-axis stage-Micrometer design

Model specification	Manual X axis+L plate □□-Central	Manual X axis+L plate □□-Side / micrometer head downward	
Aluminum alloy			P.37 ~ P.40

XZ-axis and XYZ-axis stage-Micrometer design

Model specification	Manual XZ & XYZ axis □□		
Aluminum alloy			P.41 ~ P.42

Crossed roller guide type-Precisioning Stage

Multi-axis stage-Micrometer design / X & XY-axis mini stage-Thin type

	Model specification	Multi-axis module	Manual X & XY-axis 30-Side / Central
P.43 ~ P.46	Aluminum alloy		

X & XY-axis stage-Thin type

	Model specification	Manual X & XY-axis 40-Side / Central	Manual X & XY-axis 60-Side / Central
P.47 ~ P.50	Aluminum alloy		
P.51 ~ P.54	Aluminum alloy		

Z-axis stage-Thin type / XY-axis stage-Super thin type

	Model specification	Manual+L plate □□-Side / micrometer head up	Manual XY-axis □□-Side
P.55 ~ P.58	Aluminum alloy		

XY-axis stage-Super thin type

	Model specification	Manual XY-axis □□-Central
P.59 ~ P.60	Aluminum alloy	

X & XY-axis stage-Feeding screw design

	Model specification	Manual X & XY-axis 25-Side / Central	Manual X & XY-axis 30-Side / Central
P.61 ~ P.64	Aluminum alloy		
P.65 ~ P.68	Aluminum alloy		
P.69 ~ P.72	Aluminum alloy		

Crossed roller guide type-Precisioning Stage

X & XY-axis stage-Feeding screw design

	Model specification	Manual X & XY-axis 80-Side / Central	Manual X & XY-axis 100-Side / Central
P.73 ~ P.76	Aluminum alloy		

	Model specification	Manual X & XY-axis 120-Side / Central
P.77 ~ P.78	Aluminum alloy	

X axis stage-Micrometer design

	Model specification	Manual X axis 64-Side / Central
P.79	Aluminum alloy	

XYZ axis stage-Micrometer design

	Model specification	Manual XYZ axis 20	Manual XYZ axis 30
P.80 ~ P.81	Aluminum alloy		

	Model specification	Manual XY-axis 40	Manual XY-axis 60
P.82 ~ P.83	Aluminum alloy		

XYZ axis stage-Prober stage

	Model specification	Manual XYZ axis 20	Manual XYZ axis 20
P.84 ~ P.85	Aluminum alloy		

	Model specification	Manual XYZ axis 40
P.86	Stainless steel	

X axis stage-Heavy loading

	Model specification	Manual X axis 80-Central
P.87	Carbon steel	

Linear ball guide type-Precisioning Stage

X & XY-axis stage-Micrometer design

	Model specification	Manual X & XY-axis 25-Side / Central	Manual X & XY-axis 30-Side / Central
P.89 ~ P.92	Stainless steel		

	Model specification	Manual X & XY-axis 40-Side / Central	Manual X & XY-axis 50-Side / Central
P.93 ~ P.96	Stainless steel		

	Model specification	Manual X & XY-axis 60-Side / Central	Manual X & XY-axis 70-Side / Central
P.97 ~ P.100	Stainless steel		

	Model specification	Manual X & XY-axis 80-Side / Central	Manual X & XY-axis 100-Side / Central
P.101 ~ P.104	Stainless steel		

Z-axis stage-Micrometer design

	Model specification	Manual X axis+L plate □□-Central	Manual X axis+L plate □□-Side / micrometer head downward
P.105 ~ P.108	Stainless steel		

XY-axis stage-Super thin type

	Model specification	Manual XY-axis □□-Side	Manual XY-axis □□-Central
P.109 ~ P.112	Stainless steel		

XZ-axis stage-Micrometer design

	Model specification	Manual XZ & XYZ axis □□
P.113 ~ P.114	Stainless steel	

X axis and XY-axis stage-Feed screw design

	Model specification	Manual X & XY-axis 25-Side / Central	Manual X & XY-axis 30-Side / Central
P.115 ~ P.118	Stainless steel		

Linear ball guide type-Precisioning Stage

X axis and XY-axis stage-Feed screw design

Model specification	Manual X & XY-axis 40-Side / Central	Manual X & XY-axis 50-Side / Central	
Stainless steel			P.119 ~ P.122

Model specification	Manual X & XY-axis 60-Side / Central	Manual X & XY-axis 70-Side / Central	
Stainless steel			P.123 ~ P.126

Model specification	Manual X & XY-axis 80-Side / Central	Manual X & XY-axis 100-Side / Central	
Stainless steel			P.127 ~ P.130

Model specification	Manual X axis 60*120-Side	
Stainless steel	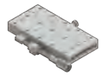	P.131

Dovetail positioning stage-Feeding screw type

X axis stage / XY-axis stage

Model specification	Manual Dovetail X axis Feed screw type-□□	Manual Dovetail XY-axis Feed screw type-□□	
Brass alloy			P.134 ~ P.135

Z-axis stage

Model specification	Manual Dovetail Z-axis Feed screw type-□□	
Brass alloy		P.136

X axis stage-Guide travel 4.2mm thin type / Z-axis stage-Guide travel 4.2mm thin type

Model specification	Manual Dovetail X axis Feed screw thin type-□□	Manual Dovetail X axis Feed screw thin type-□□	
Brass alloy			P.137 ~ P.138

Dovetail positioning stage-Feed screw type

	X axis and XY-axis stage-Guide travel 4.2mm Feed screw thin type	X axis stage-Guide travel 4.2mm Feed screw thin type
Model specification	Manual Dovetail X & XY-axis Feed screw thin type-□□	Manual Dovetail X axis Feed screw thin type-□□
Aluminum alloy		

P.139 ~ P.140

	X axis stage-Guide travel 4.2mm Feed screw clamping type	X axis stage-Guide travel 4.2mm Feed screw clamping type
Model specification	Manual Dovetail X axis Feed screw type-□□	Manual Dovetail X axis Feed screw type-□□
Aluminum alloy		

P.141 ~ P.142

	XY-axis stage-Guide travel 4.2mm	Z-axis stage-Guide travel 4.2mm
Model specification	Manual Dovetail XY-axis Feed screw thin type-□□	Manual Dovetail Z-axis Feed screw thin type-□□
Aluminum alloy		

P.143 ~ P.144

	X axis stage-Guide travel 4.2mm	X axis and Z-axis stage-Guide travel 0.5mm
Model specification	Manual Dovetail X axis Feed screw type-□□	Manual Dovetail X & Z-axis Feed screw thin type-□□
Aluminum alloy		

P.145 ~ P.146

	X axis stage-Guide travel 4.2mm	
Model specification	Manual Dovetail X axis Feed screw type-48KM【R】	
Aluminum alloy	【KM】	【KMR】

P.147

Dovetail positioning stage-Rack and pinion type

	X axis stage	XY-axis stage
Model specification	Manual Dovetail X axis Rack and pinion type-□□	Manual Dovetail XY-axis Rack and pinion type-□□
Aluminum alloy		

P.149 ~ P.150

	Z-axis stage
Model specification	Manual Dovetail Z-axis Rack and pinion type-□□
Aluminum alloy	

P.151

Dovetail positioning stage-Rack and pinion type

	X axis stage / Long stroke
Model specification	Manual Dovetail X axis Rack and pinion type-□□
Carbon steel	

P.152

	X axis stage / Long stroke	X axis stage / Long stroke
Model specification	Manual Dovetail X axis Rack and pinion type-□□	Manual Dovetail X axis Rack and pinion type-□□
Aluminum alloy		

P.153 ~ P.156

	Z-axis stage / Long stroke		
Model specification	Manual Dovetail Z-axis Rack and pinion type-□□		
Aluminum alloy			

P.157 ~ P.159

	X axis stage
Model specification	Manual Dovetail X axis Rack and pinion type-□□
Aluminum alloy	MC1D-25 is Brass alloy

P.160

	XY-axis stage	Z-axis stage
Model specification	Manual Dovetail XY-axis Rack and pinion type-□□	Manual Dovetail Z-axis Rack and pinion type-□□
Aluminum alloy	MC2D-25 is Brass alloy	MC4D-25 is Brass alloy

P.161 ~ P.162

	X axis stage	XY-axis stage
Model specification	Manual Dovetail X axis Rack and pinion type-□□	Manual Dovetail XY-axis Rack and pinion type-□□
Aluminum alloy		

P.163 ~ P.164

	Horizontal Z-axis stage	XZ-axis stage - X：Feed screw Z：Rack and pinion
Model specification	Manual Dovetail Z-axis Rack and pinion type-□□	Manual Dovetail XY-axis Rack and pinion type-□□
Aluminum alloy	MC3B-25 is Brass alloy	MC5B-25、MC5B-40 are Brass alloy

P.165 ~ P.166

INDEX

Dovetail positioning stage-Rack and pinion type

X axis stage-Extend handle

P.167	Model specification	Manual Dovetail X axis Rack and pinion type-□□
	Aluminum alloy	

		X axis stage - 無：Single knob；W：Dual knobs	XY-axis stage - 無：Single knob；W：Dual knobs
P.169 ~ P.172	Model specification	Manual Dovetail X axis Rack and pinion type-□□	Manual Dovetail XY-axis Rack and pinion type-□□
	Aluminum alloy		

		Z-axis stage - 無：Single knob；W：Dual knobs	
P.173 ~ P.176	Model specification	Manual Dovetail Z-axis Rack and pinion type-□□	Manual Dovetail Z-axis Rack and pinion type-□□
	Aluminum alloy		

		X+Z axis stage - 無：Single knob；W：Dual knobs	XY+Z axis stage - 無：Single knob；W：Dual knobs
P.177 ~ P.184	Model specification	Manual Dovetail X+Z axis Rack and pinion type-□□	Manual Dovetail XY+Z axis Rack and pinion type-□□
	Aluminum alloy		

X & XY & Z & X+Z / XY+Z axis stage

P.185 ~ P.186	Model specification	Manual Dovetail multi-axis Rack and pinion type-□□
	Brass alloy	

Dovetail positioning stage-Feed screw type【Hex. wrench design】

		X & XY axis stage	Z-axis stage
P.187 ~ P.190	Model specification	Manual Dovetail X & XY-axis Feed screw type-□□	Manual Dovetail Z-axis Feed screw type-□□
	Brass alloy		

XY+Z axis stage

P.191	Model specification	Manual Dovetail XY+Z axis Feed screw type-□□
	Brass alloy	

INDEX

Dovetail positioning stage-Feed screw type

X axis stage-Feed screw type

P.192 ~ P.193	Model specification	Manual X axis 50-Central	Manual X axis 50-Central
	Aluminum alloy		

		XX-axis stage-Feed screw+Rack and pinion type	X axis stage-Rack and pinion type
P.194 ~ P.195	Model specification	Manual XX-axis 40-Side / Central	Manual X axis 35-Central
	Aluminum alloy		

XYZ axis stage-Rack and pinion type

P.196	Model specification	Manual X & XY-axis 40-Side / Central
	Aluminum alloy	

X axis stage-Micrometer type

P.197	Model specification	Manual X axis 40-Central
	Aluminum alloy	

Double bars guide type【Mini type】

		X axis stage	XY-axis stage
P.199 ~ P.202	Model specification	Manual Double bars X axis Feed screw type-□□	Manual Double bars XY-axis Feed screw type-□□
	Aluminum alloy		

		X axis stage	XY-axis stage
P.203 ~ P.206	Model specification	Manual Double bars X axis Thread screw-□□	Manual Double bars XY-axis Thread screw-□□
	Aluminum alloy		

		X axis stage	X axis and XY-axis stage
P.207 ~ P.210	Model specification	Manual Double bars X axis Free screw-□□	Manual Double bars XY-axis Single spring-□□
	Aluminum alloy		

Crossed roller guide type

Horizontal Z-axis stage		
Model specification	Manual Crossed roller horizontal Z-axis-□□	Manual Crossed roller horizontal Z-axis
Aluminum alloy		

P.211 ~ P.214

Laboratory jack type

Horizontal Z-axis	
Model specification	Manual Laboratory jack horizontal Z-axis-□□
Aluminum alloy	

P.215 ~ P.216

Rotary stage

Precision type		Precision type-Thin type
Model specification	Manual θ axis-□□	Manual thin type θ axis-□□
Aluminum alloy		

P.217 ~ P.220

Economy type		
Model specification	Manual θ axis-□□	Rotary stage□□／Economy type
Aluminum alloy		
Carbon steel		

P.221 ~ P.223

Magnetic base

Thin type		Standard type
Model specification	Magnetic base thin type-□□	Magnetic base standard type-□□
素碳鋼	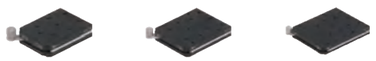	

P.224 ~ P.226

Tilt stage

Feeding type		Thunbscrew type
Model specification	側調式傾斜平台-□□ 型	直調式傾斜平台-□□ 型
Aluminum alloy	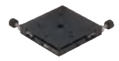	

P.227 ~ P.230

Bracket & Adjustable plate & Adaptor plate

Bracket-Z-axis application	
Model specification	One-unit L barcket / Reinforced barcket -□□【☆】
Aluminum alloy	
S50C	

P.231 ~ P.232

Adjustable plate		Adaptor plate
Model specification	Adjustable plate -□□	Adaptor plate -□□
Aluminum alloy	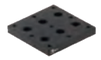	

P.233 ~ P.234

Dovetail α & αβ axis goniometer

α axis		αβ axis
Model specification	Manual Dovetail α axis□-□□goniometer stage	Manual Dovetail αβ axis□-□□goniometer stage
Brass alloy		

P.235 ~ P.240

α axis ／ αβ axis	
Model specification	Manual Dovetail α axis ／ αβ axis□-□□goniometer stage
Brass alloy	

P.241 ~ P.252

Feeding screw drive

Single axis clamping fixture	
Model specification	Vice Clamping Fixture
Aluminum alloy	

P.253

Fiber positioning stage

	Three axis		Five axis
P.255 ~ P.262	Model specification	Fiber positioning XYZ axis stage	Fiber positioning XYZ,θx,θy axis stage
	Aluminum alloy		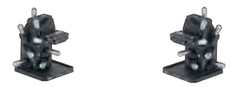

	Five axis		Six axis
P.263 ~ P.270	Model specification	Fiber positioning XYZ,θx,θy axis 調整滑台	Fiber positioning XYZ,θx,θy axis stage
	Aluminum alloy Stainless steel		

	Double axis	
P.271 ~ P.274	Model specification	Fiber positioning θx,θy axis tilt stage
	Stainless steel	

	Double axis		Three axis
P.275 ~ P.282	Model specification	Fiber positioning XY-axis crossed roller guiding type	Fiber positioning XYZ axis crossed roller guiding type
	Aluminum alloy		

Micrometer

Micrometer specification description ····· P.283
Micrometer introduction ····· P.284
Micrometer specification【Travel stroke 0 ~ 6.5】····· P.285
Micrometer specification【Travel stroke 0 ~ 13】····· P.286
Micrometer specification【Travel stroke 0 ~ 15】····· P.287
Micrometer specification【Travel stroke 0 ~ 25】····· P.288
Micrometer specification【Travel stroke 0 ~ 50】····· P.289
Micrometer specification【Travel stroke 0 ~ 6.5/0 ~ 0.25】····· P.290
Micrometer specification【英制規格】····· P.291
Micrometer specification【Economic type stroke 0 ~13】····· P.292
Micrometer specification【Economic type stroke 0 ~25】····· P.293

Feeding screw stage

Feeding screw specification description ····· P.295
Feeding screw introduction ····· P.296
Feeding screw specification ····· P.297~P.299

Application examples

Application Examples ····· P.301~P.302
Model number research index by letter ····· P.303~P.304

Mini stage specification comparision index

MX□／MY□- AC (AS)【Aluminum alloy】-Micrometer design				P.17 ~ P.35
Product trait	Crossed roller guide type			
Pages	P.17 ～ P.21	P.23 ～ P.29	P.31 ～ P.35	
Image				
Table size【mm】	□20、□25、□30	□40、□50、□60、□70	□80、□100、□120	
Travel stroke【mm】	±3.2	±6.5	±12.5	
Loading【kgf】	1	2 ～ 6／1.8 ～ 6	10 ～ 20／9.5 ～ 18.4	
Weight【kgf】	0.03~0.045／0.06~0.09	0.14 ～ 0.44／0.3 ～ 0.88	0.5 ～ 1.6／1 ～ 3.2	

MXL□／MYL□ - AC (AS)【Thin aluminum alloy】- Micrometer design			P.45 ~ P.53
Product trait	Crossed roller guide type		
Pages	P.45 ～ P.49	P.51 ～ P.53	
Image			
Table size【mm】	□30、□40、□60	□90、□125	
Travel stroke【mm】	±3.2【□30】、±6.5 【□40、□60】	±7.5 、 ±12.5	
Loading【kgf】	1 ～ 5／1 ～ 5	8／15	
Weight【kgf】	0.04 ～ 0.3／0.08 ～ 0.5	0.45 ～ 1.1／0.85 ～ 2	

MZL□- ASZ【Aluminum alloy】- Micrometer design				P.55
Product trait	Crossed roller guide type			
Pages	P.55			
Image				
Table size【mm】	□30、□40、□60、□90			
Travel stroke【mm】	±3.2【□30】	±6.5【□40、□60】	±7.5【□90】	
Loading【kgf】	1.5	1.5／2	3	
Weight【kgf】	0.1	0.21／0.52	0.91	

MZL□ - ACR (AS)／SCR／SS【Aluminum alloy】／【Stainless steel】- Micrometer design			P.37 ~ P.39、P.105 ~ P.107
Product trait	Crossed roller guide type／Linear ball guide type		
Pages	P.37 ～ P.39	P.105 ～ P.107	
Image			
Table size【mm】	□25、□40、□60、□80		
Travel stroke【mm】	±3.2【□25】、 ±6.5【□40、□60】、 ±12.5【□80】		
Loading【kgf】	0.5、1、2、5／1【□25】、5【□40、□60、□80】		
Weight【kgf】	0.06、0.2、0.45、0.8／0.23、0.32、【0.58／0.88】、1.2		

P.57 ~ P.59、P.109 ~ P.110

MYW ☐ - AS (AC) ／ SS (SC) Series【Super thin Aluminum alloy】／【Super thin Stainless steel】- Micrometer design		
Product trait	Crossed roller guide type／Linear ball guide type	
Pages	P.57 ～ P.59	P.109 ～ P.110
Image		
Table size【mm】	☐40、☐60、☐80、☐100	
Travel stroke【mm】	±6.5【☐40、☐60】、 ±12.5【☐80、☐100】	
Loading【kgf】	1【☐40】、3【☐60】、4【☐80、☐100】／9、19、20、25	
Weight【kgf】	0.2、0.4、0.7、1.1 ／ 0.34、0.64、1.32、2	

P.61 ~ P.77

MX ☐ ／ MY ☐ - AC (AS)【Aluminum alloy】- Feeding screw design			
Product trait	Crossed roller guide type		
Pages	P.61 ～ P.63	P.65 ～ P.71	P.73 ～ P.77
Image			
Table size【mm】	☐25、☐30	☐40、☐50、☐60、☐70	☐80、☐100、☐120
Travel stroke【mm】	±3.2	±6.5	±12.5
Loading【kgf】	1	2 ～ 6 ／ 1.8 ～ 6	10 ～ 20 ／ 9.5 ～ 18.4
Weight【kgf】	0.04 ～ 0.045 ／ 0.08 ～ 0.09	0.14 ～ 0.44 ／ 0.3 ～ 0.88	0.5 ～ 1.6 ／ 1 ～ 3.2

P.79

MX764 - AC - SHR【Aluminum alloy】- Micrometer design			
Product trait	Crossed roller guide type		
Pages	P.79【X axis】		
Image			
Table size【mm】	76×64		
Travel stroke【mm】	Coarse：≒6.5	Medium：≒0.325	Fine：≒0.0325
Loading【kgf】	1.5		
Weight【kgf】	0.6		

P.84 ~ P.86

MPS Series【Prober stage series ／ XYZ axis】			
Product trait		Crossed roller guide type	Linear ball guide type
Pages	P.84	P.85	P.86
Image			
Table size【mm】	☐ 20	20*35	☐ 40
Travel stroke【mm】	±3	±5	±6.5
Loading【kgf】	1	1.5	4.5
Weight【kgf】	0.08	0.02	0.9

P.81 ~ P.82

MBZ【Aluminum alloy】低組裝		
Product trait	Crossed roller guide type	
Pages	P.80	P.81
Image		
Table size【mm】	☐ 20	☐ 30
Travel stroke【mm】	±3	±3.25
Loading【kgf】	1	1.5
Weight【kgf】	0.08	0.18

P.87

MXTH80 - FCS【Carbon steel】- Feeding screw type	
Product trait	Crossed roller guide type
Pages	P.87
Image	
Table size【mm】	☐ 80
Travel stroke【mm】	±20
Loading【kgf】	40.5
Weight【kgf】	1.9

P.89 ~ P.103

MX ／ MY - SC (SS)【Stainless steel】- Micrometer design			
Product trait	Linear ball guide type		
Pages	P.89 ～ P.91	P.93 ～ P.99	P.101 ～ P.103
Image			
Table size【mm】	☐25、☐30	☐40、☐50、☐60、☐70	☐80、☐100
Travel stroke【mm】	±3.2	±6.5	±12.5
Loading【kgf】	4 ～ 6 ／ 3.9 ～ 5.9	10 ～ 23 ／ 9.7 ～ 22.4	27 ～ 35 ／ 26.1 ～ 33.6
Weight【kgf】	0.07 ～ 0.95 ／ 0.14 ～ 1.9	0.23 ～ 0.58 ／ 0.46 ～ 1.16	0.9 ～ 1.33 ／ 1.8 ～ 2.66

P.82 ~ P.83

MYCP ☐ - A【Aluminum alloy / XY-axis】- Micrometer		
Product trait	Crossed roller guide type	
Pages	P.82	P.83
Image		
Table size【mm】	☐ 40	☐ 60
Travel stroke【mm】	±6.5	
Loading【kgf】	1.8	4.5
Weight【kgf】	0.28	0.5

P.115 ~ P.129

MX ／ MY - SC (SS)【Stainless steel】- Feeding screw type			
Product trait	Linear ball guide type		
Pages	P.115 ～ P.117	P.119 ～ P.125	P.127 ～ P.129
Image			
Table size【mm】	□25、□30	□40、□50、□60、□70	□80、□100
Travel stroke【mm】	±3.2	±6.5	±12.5
Loading【kgf】	4～6／3.9～5.9	10～23／9.7～22.4	27～35／26.1～33.6
Weight【kgf】	0.07～0.95／0.14～1.9	0.23～0.58／0.46～1.16	0.9～1.33／1.8～2.66

P.41 ~ P.42、P.113 ~ P.114

MXZ □／MXYZ □ - A／S【Aluminum alloy】／【Stainless steel】- Micrometer design		
Product trait	Crossed roller guide type／Linear ball guide type	
Pages	P.41 ～ P.42	P.113 ～ P.114
Image		
Table size【mm】	□25、□30、□40、□50、□60、□70、□80、□100、《□120 鋁合金專有》	
Loading【kgf】	□25～□50＝1，□60、□70＝2 □80～□120＝5	□25＝1，□30～□100＝5
Movement and weight【kg】please refer to the product page		

P.43 ~ P.44

MXYZA／MXYWZA／MXYR／MXYZAR／MXYWR／MXYWZAR【Aluminum alloy】- Micrometer design		
Product trait	複合多軸滑台組	
Pages	P.43	P.44
Image		
Table size【mm】	Please refer to the product page	
Loading【kgf】	Please refer to the product page	
Movement and weight【kg】please refer to the product page		

P.131

MX □ L - SS【Stainless steel】- Feeding screw type	
Product trait	Linear ball guide type
Pages	P.131
Image	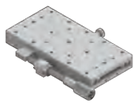
Table size【mm】	60×120
Travel stroke【mm】	±12.5
Loading【kgf】	16
Weight【kgf】	0.76

P.134 ~ P.136

MC1A -□Series／MC2A - □Series／MC4A - □Series【本體：Brass alloy】			
Product trait	Dovetail feeding screw type		
Pages	P.134	P.135	P.136
Image		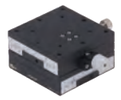	
Table size【mm】	□25、□40、□60		
Travel stroke【mm】	±3、±7 、±9		
Loading【kgf】	3、3、4	2.9、2.8、3.4	1、1、2
Weight【kgf】	0.07、0.19、0.47	0.15、0.38、1.2	0.09、0.26、0.75

P.137、P.140、P.147

MC1A - A □Series／MC1A - □L Series／MC1A - □KMR Series【Aluminum alloy；Lead：4.2mm】			
Product trait		Dovetail feeding screw thin type	Dovetail feeding screw type
Pages	P.137	P.140	P.147
Image			
Table size【mm】	□40、□60	40×60、 40×90	40×80
Travel stroke【mm】	±11、±21	±21 、±35	±30
Loading【kgf】	2、3	3、3	4
Weight【kgf】	0.10、0.19	0.14、0.19	0.31

P.138、P.144

MC4A - A □ Series／MC4A - □ S Series【Aluminum alloy；Lead：4.2 mm】		
Product trait	Dovetail feeding screw type	
Pages	P.138【Z-axis thin type】	P.144【Z-axis】
Image		
Table size【mm】	□ 60	40×90
Travel stroke【mm】	±21	±35
Loading【kgf】	2.1	2
Weight【kgf】	0.42	0.46

P.139、P.146

MC1 (2) A - □ CLSeries／MC1 (4) - □ Series【Aluminum alloy；Lead：0.5 mm】				
Product trait	Dovetail feeding screw type			
Pages	P.139【X axis / XY-axis】		P.146【X axis / Z-axis】	
Image				
Table size【mm】	□ 60		□ 40	
Travel stroke【mm】	±9		±7	±7
Loading【kgf】	4	3.4	3	2.1
Weight【kgf】	0.47	0.98	0.2	0.28

P.140 、 P.143

MC1 (2) A - □ L、C、S Series【Aluminum alloy：Lead：4.2 mm】							
Product trait	Dovetail feeding screw type						
Pages	P.140【X axis / T=18】		P.141【X axis / T=26】	P.142【X axis / T=26】		P.143【XY axis 】	
Image							
Table size【mm】	40×60	40×90	40×60	40×60	40×90	40×60	40×90
Travel stroke【mm】	±21	±35	±21	±21	±35	±21	±35
Loading【kgf】	3		4 / 2	4 / 2		3.8	3.72
Weight【kgf】	0.14	0.19	0.19	0.19	0.29	0.43	0.62

P.145

MC1A - 425 Series【Aluminum alloy；Lead：4.2 mm】	
Product trait	Dovetail feeding screw type
Pages	P.145
Image	
Table size【mm】	25×40
Travel stroke【mm】	±12
Loading【kgf】	3 / 1.5
Weight【kgf】	0.09

P.149 ～ P.151

MC1B - □Series／MC2B - □Series／MC4B - □Series【Aluminum alloy】			
Product trait	Dovetail Rack and Pinion Type		
Pages	P.149	P.150	P.151
Image			
Table size【mm】	24.8×42、40×60、40×90、40×140		
Travel stroke【mm】	±12、±21、±35、±60		
Loading【kgf】	3、4、4、4	2.5、3.5、3.5、3.5	1.5、2、2、2
Weight【kgf】	0.17、0.29、0.40、0.56	0.29、0.51、0.73、1.08	0.17、0.33、0.45、0.68

P.153 ～ P.154 、 P.157

MC1C - □Series／MC3C - □Series【Aluminum alloy】		
Product trait	Dovetail Rack and Pinion Type	
Pages	P.153 ～ P.154	P.157
Image		
Table size【mm】	50、70、100、150、200、250	50、70、100、150、200、250、300
Travel stroke【mm】	±15、±25、±40、±65、±90、±115	±15、25、±40、±65、±90、±115、±140
Loading【kgf】	3	1.5
Weight【kgf】	0.12、0.12、0.14、0.17、0.21、0.36	0.12、0.135、0.16、0.215、0.3、0.36、0.41

P.155 ～ P.156 、 P.158 ～ P.159

MC1C - □ - 2／MC3C - □ - 2／MC3C - □ - 3【Aluminum alloy】							
Product trait	Dovetail Rack and Pinion Type【Two slide blocks / Three slide blocks】						
Pages	P.155		P.156	P.158			P.159
Image							
Table size【mm】	25×150	25×200	25×300	150(高度)	200(高度)	300(高度)	300(高度)
Travel stroke【mm】	±20	±37	±70	±20	±37	±70	±43
Loading【kgf】	3			3	1.5		1.5
Weight【kgf】	0.24	0.28	0.35	0.27	0.3	0.48	0.55

P.160 ～ P.162

MC1D - □Series／MC2D - □Series／MC4D - □Series【Aluminum alloy】			
Product trait	Dovetail Rack and Pinion Type		
Pages	P.160	P.161	P.162
Image			
Table size【mm】	□25【Brass alloy】、□40、□60		
Travel stroke【mm】	±5、±10、±20		
Loading【kgf】	3、3、4	2.9、2.8、3.0	0.7、1.5、2
Weight【kgf】	0.09、0.21、0.64	0.18、0.37、1.19	0.11、0.23、0.6

P.163 ～ P.164 、 P.167

MC1D - 40L／MC2DA - 48NH／MC1BL - 60【Aluminum alloy】				
Product trait	Dovetail Rack and Pinion Type			
Pages	P.163	P.164		P.167
Image	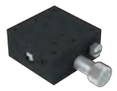			
Table size【mm】	□ 40	Up：40×80	Lower：40×80	40×60
Travel stroke【mm】	±10	±35	±30	±21
Loading【kgf】	2	3		3
Weight【kgf】	0.25	0.6		0.3

P.165 ～ P.166

MC3B - □Series／ MC5B - □Series【Aluminum alloy】；【Brass alloy】		
Product trait	Dovetail Rack and Pinion Type	
Pages	P.165	P.166
Image		
Table size【mm】	□25【Brass alloy】、□40【Brass alloy】、□60	□25【Brass alloy】、□40【Brass alloy】、□60
Travel stroke【mm】	±2.5、±5、±10	X ＝ ±5、±7、±10 ／ Z ＝ +10、+10、+25
Loading【kgf】	0.7、1、1.5	1
Weight【kgf】	0.08、0.12、0.47	0.17、0.51、0.62

P.169 ~ P.176

MCS ／ MCD ／ MCV【Single knob 、Dual knobs】【無：Z 可上下、L：Z 只上】【Aluminum alloy】								
Product trait	Dovetail Rack and Pinion Type【Substance weight is single knob】							
Pages	P.169 ～ P.170		P.171 ～ P.172		P.173 ～ P.174		P.175 ～ P.176	
Image	◎／X ☆／X		◎／XY ☆／XY		◎／Z ☆／Z		◎△／Z ☆△／Z	
Table size【mm】	【44 ＝ 40×40、46 ＝ 40×60】＝◎、【49 ＝ 40×90、41 ＝ 40×140】＝☆							
Travel stroke【mm】	【±10、±15】＝◎ 、【±30、±50】＝☆、Z axis with upper stroke direction only【＋】＝ △							
Loading【kgf】	4		3.5		2		2	
Weight【kgf】	0.24、0.31	0.4、0.55	0.41、0.54	0.72、1.07	0.26、0.36	0.47、0.67	0.23、0.33	0.45、0.63

P.177 ~ P.184

MCM ／ MCT - □【Single knob 、Dual knobs】【無：Z 可上下、L：Z 只上】【Aluminum alloy】								
Product trait	Dovetail Rack and Pinion Type【Substance weight is single knob】							
Pages	P.177 ～ P.178		P.179 ～ P.180		P.181 ～ P.182		P.183 ～ P.184	
Image	◎／X＋Z ☆／X＋Z		◎△／X＋Z ☆△／X＋Z		◎／XY＋Z ☆／XY＋Z		◎△／XY＋Z ☆△／XY＋Z	
Table size【mm】	【44 ＝ 40×40、46 ＝ 40×60】＝◎、【49 ＝ 40×90、41 ＝ 40×140】＝☆							
Travel stroke【mm】	【±10、±15 】＝◎、【±30、±50 】＝☆、Z axis with upper stroke direction only【＋】＝ △							
Loading【kgf】	2							
Weight【kgf】	0.5、0.67	0.87、1.23	0.47、0.64	0.85、1.18	0.67、0.9	1.2、1.74	0.64、0.87	1.17、1.7

P.185、P.187 ~ P.189

MC □D - 2550 ／ MC □E - □【Brass alloy】			
Product trait	Dovetail Rack and Pinion Type / Hexagon wrench type		
Pages	P.185	P.187	P.189
Image	1 = X axis 2 = XY axis 4 = Z axis 5 = X + Z axis 6 = XY + Z axis		《》 = Z axis 【】 = dual axis
Table size【mm】	25×50	□25、□40、□60	
Travel stroke【mm】	±10	±3、±5、±7	
Loading【kgf】	X、XY ＝ 8；Z、X ＋ Z、XY ＋ Z ＝ 1	3【2.9】《1》、3【2.8】《1》、4【3.4】《2》	
Weight【kgf】	0.22、0.44、0.3、0.52、0.75	0.07【0.15】《0.08》、0.19【0.38】《0.27》、0.6【1.2】《0.65》	

P.191

MC6E - 25 Series【Aluminum alloy】	
Product trait	Dovetail Rack and Pinion Type
Pages	P.191【XYZ axis】
Image	
Table size【mm】	25×25
Travel stroke【mm】	±3
Loading【kgf】	1.9
Weight【kgf】	0.22

P.192 ~ P.194

MC1G - 525C (F)／MC1G - 535C (F)／MC7G - 4050C (F)【Aluminum alloy】				
Product trait	Dovetail feeding screw type【PITCH = C：0.5／F：0.25】			
Pages	P.192	P.193	P.194	
Image				
Table size【mm】	□ 50	□ 50	40×50	
Travel stroke【mm】	±11	±16	Upper(Fine)：±17.5	Lower(Coarse)：±30
Loading【kgf】	5	5	4	
Weight【kgf】	0.27	0.29	0.5	

P.195 ~ P.196

MC1G - 35LG／MC6G - 35LG【Aluminum alloy】				
Product trait	Dovetail Rack and Pinion Type (適合CCD調整用)			
Pages	P.195	P.196		
Image				
Table size【mm】	24.5×35	—		
Travel stroke【mm】	±10	20【X axis】	30【Y axis】	60【Z axis】
Loading【kgf】	3	2		
Weight【kgf】	0.25	0.81		

P.197

MC1F - 40【Aluminum alloy】	
Product trait	Dovetail Positioning Stage
Pages	P.197
Image	
Table size【mm】	□ 40
Travel stroke【mm】	±10
Loading【kgf】	3
Weight【kgf】	0.17

P.199 ~ P.205

MNG □E - □CL ／ MNE □E - □【Aluminum alloy】		
Product trait	Simplified guide type (mini type) - Feeding screw / Threading screw	
Pages	P.199 ～ P.201	P.203 ～ P.205
Image	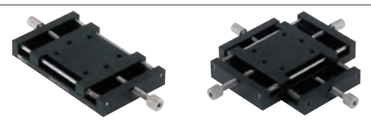 《》 =dual axis	
Table size【mm】	□20、□25、□40、□60	
Travel stroke【mm】	【□20、□25】＝ ±5、【□40、□60】＝ ±7.5	【□20、□25】＝ ±7、±9、±13
Loading【kgf】	【□20、□25】＝ 0.2、【□40、□60】＝ 1.5	【□20、□25】＝ 1.9、【□40、□60】＝ 3.7
Weight【kgf】	0.038《as left》、0.055《as left》、0.104《0.202》、0.193《0.358》	0.1、0.13、0.27、0.48

P.207 ~ P.209

MNE1E - □／MN □A - □【Aluminum alloy】		
Product trait	Simplified guide type (mini type) - Free screw	
Pages	P.207	P.209
Image	【 】=mutual quantitative value	【 】=dual axis
Table size【mm】	40×40、40×25、【60×60、60×40】	12×13、15×17、【12×13、15×17】
Travel stroke【mm】	10【15】、25【30】、40【50】、60【70】	±1.7、±5、【±1.7、±5】
Loading【kgf】	4【8】、3.5【7】、4【8】、3.5【7】	0.5、1、【0.5、1】
Weight【kgf】	自由指定型，因型號而不同	0.005、0.02、【0.01、0.04】

P.211 ~ P.214

MZA - □／MZA □ - 5060【Aluminum alloy】		
Product trait	Crossed roller guide type	
Pages	P.211	P.213 ～ P.214
Image		3 kind of specifications
Table size【mm】	□25、□40、□40H、□60L、□60、□80	50×64
Travel stroke【mm】	±2、±3、±3、±3、±5、±5	5
Loading【kgf】	1、1、2、2、4、3	MZA1 = 7、MZA2 = 8、MZA3 = 10
Weight【kgf】	0.06、0.2、0.2、0.3、0.6、1	MZA1 = 0.62、MZA2 = 0.63、MZA3 = 0.72

P.215 ~ P.216

MZF - □【Aluminum alloy】		
Product trait	Horizontal Z axis stage /Rapid lifting design	
Pages	P.215 ～ P.216	
Image		
Table size【mm】	80×120、120×180	
Travel stroke【mm】	40、70	
Loading【kgf】	7、10	
Weight【kgf】	1.25、3.5	

P.217 ~ P.219、P.222 ~ P.223

MR □ - AR (Standard)、MRL □ - AR (Thin type)／MRE □ - A【Aluminum alloy】			
Product trait	Rotary stage -【Precision - Standard / Thin】 / 【Economy】		
Pages	P.217	P.219	P.222～ P.223
Image			
Table size【mm】	Ø38、Ø60、Ø85、Ø110	Ø30、Ø40、Ø60、Ø90、Ø125	Ø40、Ø60、Ø85、Ø100
Travel stroke【mm】	Coarse360°【Fine : 參考其刊載頁次】	Coarse360°【Fine±5°】	Coarse360°
Loading【kgf】	1、3、4、5	1、1.5、3、3、3	5、7、8、9
Weight【kgf】	0.09、0.28、0.48、0.75	0.1、0.1、0.2、0.5、0.9	0.14、0.2、0.4、0.66

P.221

MR50 - AR - 48【Aluminum alloy】／MR85 - S【Stainless steel】		
Product trait	Rotary stage - Precision / Heavy loading	
Pages	P.221	
Image		
Table size【mm】	Ø50	Ø85
Travel stroke【mm】	Coarse360°【Fine±5.5°】	Coarse360°【Fine±5.5°】
Loading【kgf】	1.8	6
Weight【kgf】	0.26	1

P.224 ~ P.225

MMT - □／MMS - □【Carbon steel】		
Product trait	Magnetic base - Thin type / Standard type	
Pages	P.224	P.225
Image	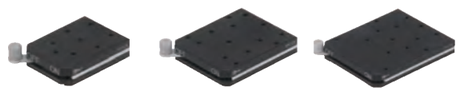	
Table size【mm】	12×38×51、12×52×63、12×66×80	20×□45、20×□65、20×□90、20×□125
Travel stroke【mm】	0.015、0.02、0.02	0.015、0.02、0.02、0.02
Loading【kgf】	1、3.3、3.8	17、20、25、70
Weight【kgf】	0.3、0.6、1.2	0.3、0.6、1.2、2.8

P.227 ~ P.229

MTB - □／MTS - □【Aluminum alloy】		
Product trait	Tilt stage - Feeding screw type / Thumbscrew type	
Pages	P.227	P.229
Image	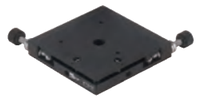	
Table size【mm】	□40、□60、□80	□30、□60、□90、□125
Travel stroke【mm】	±2°	
Loading【kgf】	2、4、5	2、4、5、5
Weight【kgf】	0.03、0.15、0.4	0.03、0.15、0.4、1

P.235 ~ P.239

MXG □- □CS／MYG □- □CS【Brass alloy】		
Product trait	Dovetail - α axis / αβ -axis Goniometer stage【Transmission：Worm＋Worm gear】	
Pages	P.235 (□ 40)、P.239 (□ 50)、P.235 (□ 60)	
Image		
Table size【mm】	□40、□50、□60	
Travel stroke【mm】	±8°～ ±25°	Upper axis：±10°～ ±25°: Lower axis ±8°～ ±20°
Loading【kgf】	3 ～ 6	2.8 ～ 5.4
Weight【kgf】	0.18 ～ 0.55	0.42 ～ 1.1

P.241

MXG9 - 118CSW【Aluminum alloy】	
Product trait	Dovetail - Goniometer stage【Transmission：Worm＋Worm gear】
Pages	P.241【α axis】
Image	
Table size【mm】	☐ 90
Travel stroke【mm】	±12°
Loading【kgf】	7.5
Weight【kgf】	0.33

P.243 ~ P.247

MXG ☐ - ☐CE ／ MYG ☐ - ☐CE【Brass alloy】		
Product trait	Dovetail - α axis / αβ -axis Goniometer stage【Transmission：Threading screw】	
Pages	P.243 (☐ 30)、P.245 (☐ 40)、P.247 (☐ 60)	
Image		
Table size【mm】	☐30、☐40、☐60	
Travel stroke【mm】	±5°～ ±8°	Upper axis：±6°～ ±8°；Lower axis：±5°～ ±6°
Loading【kgf】	1.5、3、5	
Weight【kgf】	0.1、0.3、0.7	0.2、0.6、1.4

P.249 ~ P.251

MXG4 - ☐ VM ／ MXG6 - ☐ VM Series【Aluminum alloy】						
Product trait	Dovetail - Crossed roller Goniometer stage【Transmission：Micrometer type】					
Pages	P249【α axis】			P251【α axis】		
Image						
Table size【mm】	☐ 40			☐ 60		
Travel stroke【mm】	±7°/40	±4°/60	±4°/80	±4°/50	±3°/75	±3°/100
Loading【kgf】	3			4.5		
Weight【kgf】	0.15			0.33		

P.253

MCV100 - AS【Aluminum alloy】	
Product trait	Vice Clamping Fixture
Pages	P.253
Image	
Table size【mm】	100×94
Travel stroke【mm】	0～49
Loading【kgf】	20
Weight【kgf】	0.55

Slide way	Structure	Characteristic	Application	Moving accuracy	Load capacity	Rigidity
Crossed roller	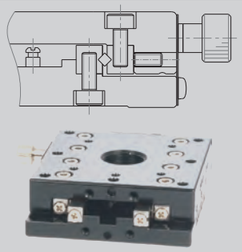	Composed of moving rails with 2V-groove surfaces harden finish, ground precisely, and roller bearings which are connective and take turns moving in 90 degrees to meet requirement of high parallism and high flatness. In structure, V-groove and crossed roller acquire movement in high accuracy and capacity by linear transmission to act a high precision movement and load capacity performance.	This applied to precise movement device in high accuracy and high capacity, optical instruments in precise gauging and fine tuning, various machine tools, gauging instruments, precise positioning and quantitative movment…etc.	Excellent	Excellent	Excellent
Linear ball	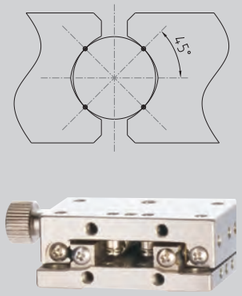	Slide way and body is in one unit, and Gothic arc-groove ground precisely to meet requirement of high parallism and high flatness. Gothic arc-groove formed by dual arc-grooves individually on upper and lower rails of body. Ball moving in single groove is structured by 2 points – contact, and total 4 contact points in dual arc-groove to form strong rail construction. In case of rails of SUS-STAGE is to set ball assembly in arc-groove to save traditional adjustment and revision time. In addition, without adjustment screw would save accuracy problem and maintenance time caused by loosen screw, and cheaper as well.	This applied to precise positioning device in high accuracy and mid-capacity, product and design integrated system, optical experiment precise transportion and fine tuning mechanism application.	Excellent	Good	Good
Dovetail type	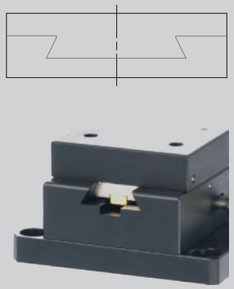	**Dovetail plane-pinion and rack** (Main material: Brass or aluminum alloy) GMT supply proper models suitable for equipped to various modules such as small, rough-vibrate, large size for installation. Driven-adjustment mode is rack and pinion. Apply to higher working frequency, requirement of faster movement and larger stroke. **Screw-driven plane** (main material: brass Prepared by easy-carry standard and slide type fit for inner set mode. Driven adjustment mode is crew shaft mode. Apply to lower frequency, fine tuning environment.	This applied to optical instruments and equipments, sampler, detecting device, semi-conductor manufacturing equipment, test machine, microscope, transiting machine, machinig center, medical instrument, printer and others.	Fair	Good	Excellent
XY Simplified stage	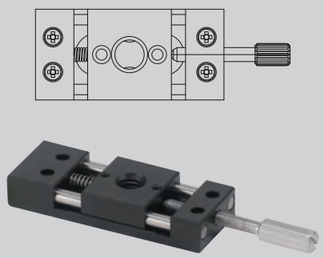	Round sticks on two sides are applied to support middle transmission construction: **Feeding screw type** To move stage table by push-and-press from screws, and to restrain gap produced by using springs tensile force. It's the type suitable for light loading and accuracy feeding application. **Threading type** The stage table is moved by thread which has been crossed through to the table. The stage table will be feed-movement in Z-axis application. The stage is suitable for heavier loading compared to feeding screw with spring transmission type.	The product is applied to fixture, camera, sensor, nozzle, and guiding groove of the conveyor, those equipments don't require high accuracy adjustment.	Fair	Fair	Fair

Outline

- Mini-Stage is applied for high precision or mid and heavy of various production machinery, testing device, precise positioning and quantitative movement.
- There're many kinds of mini-stages with single axis (X axis); dual axes (XY axis); Z axis; θaxis, αaxis…

Characteristics

- Customer's requirements of precise fine tuning; positioning; quantitative movement and able to proceed mass feed of fine tuning.
- Coordinated customer's precise machinery of instrument and fixed in suitable position.
- Feeding mode diversification such as coarse moving handle/ micrometer head; feed screw, rack and pinion with scale and able to manage movement rate.
- The sets of mini stages, XY-axis, XYZ-axis, XZ-axis, and multi-axis modules are able to effectively reduce assembling process because of adjusting their vertical angle before shipping.

Standard selection

- In accordance with different types of moving axis, minimum reading and loading capacity, GMT mini stages will be presented clearly with each kind of products.
- Please coordinate with adjusting situation and refer below information to select the most suitable stages.

The main feeding mode of Mini Stages

Main feeding mode	Characteristics	A circle movement of handle rotation	Applied for guiding device
Rack and pinion 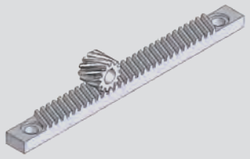	● Suitable for high speed mass feed. ● Not suitable for precise positioning.	17～20 mm	● Dovetail
Feeding Screw	● Use precise threadscrew pitch to proceed simple precise moving situation. ● 由於比分厘卡測頭更便宜，被利用在多樣產品上。	0.25～1 mm	● Dovetail ● Crossed roller ● Linear ball bearing
Micrometer head 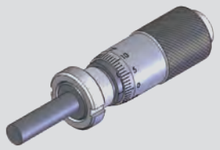	● General precise reading Unit: 0.01mm is suitable For precise tuning.	0.5 mm	● Dovetail ● Crossed roller ● Linear ball bearing
Rough slightly moving micrometer head	● Divided into rough moving (general feeding) and slight moving (micro feeding) use. ● It's a special feeding device and high cost. ● Differential motion Structure for slightly transmission.	Coarse tuning : 0.5 mm Fine tuning : 0.025 mm	● Linear ball bearing ● Crossed roller

Straightness (refer to JIS B 6191-1993)

In linear motion units, geometric straight line decides positions in order from datum point to same direction, differences between length variation in those positions and datum is as measured value. To connect datum and final testing post, the max. difference of geometric line is called “ Straightness”.

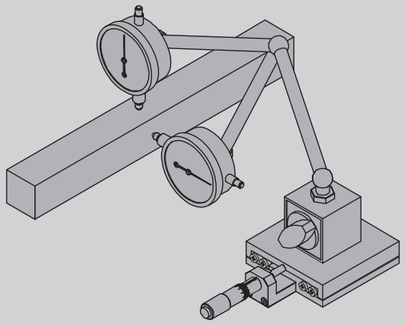

Yawing and pitching (refer to JIS B 6191-1993)

Linear motion parts would occur slanting in Transmitting, and slanting proportion would cause deflection in linear transmission. Position is decided by same direction from datum point in order, and maximum angular gap measured from horizontal direction of each position corresponding to the datum is called yawing (deviation).
Same situation to have the maximum angular gap from vertical direction of each position corresponding to ht datum called pitching.

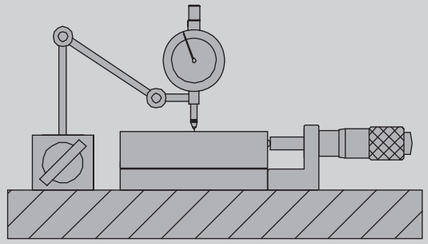

Parallelism (refer to JIS B6191-1993)

Parallelism of plane, and slanting proportion between parallel interval to mechanism parts, and degrees between center place of manual stage movement and base plate is called parallelism. Parallelism measurement is to fix micrometer on the plate, and operate manual stage with clamping device to measure the maximum of 4 corner errors.

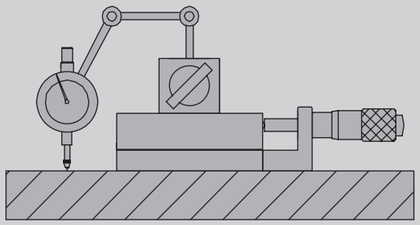

XY Vertical value (refer to JIS 7440-1987)

Vertical value between 2 axes also for one line of geometric line in transmission datum and one in its corresponding right angle. In the other direction (Opposite), to take slanting proportion in linear transmission, reference point of X-axis stage, and geometric line of final tested position as datum axes. X-axis stage as for datum axis, maximum of parallel errors from its vertical geometric line in opposition to datum position of Y-axis stage to final texted position is called XY vertical value.

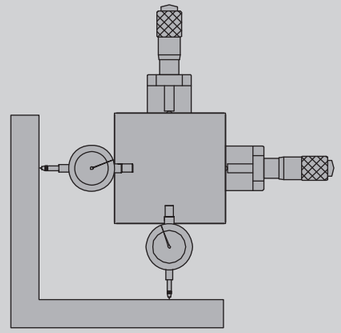

Concentricity (refer to JIS B 6191-1993, B6194-1997)

Difference of datum circle and geometric circle.
All points in line in same plane of 2 concentric circles, radius difference of 2 concentric circles is in case of smallest radial interval difference.
Opposite to geometric circle, measured difference is called concentricity. Fix rotating stage on the plate, and put micrometer around stage. Have it to rotate one circle (360°) to proceed measuring.
Concentricity is half of top value shown in micrometer.

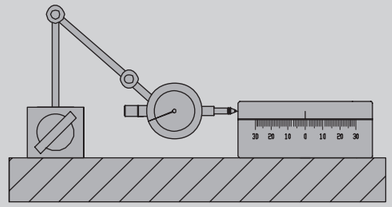

Plant travel amplitude (refer to JIS B6191-1993)

Rotate as center of single axis, in the period of plane turning, max. slanting value of deviation of vertical plane to datum axis back to stage vertically is called plane travel amplitude. Take micrometer fixed on the plate to contact upper edge of rotating stage (rotating one circle 360), and proceed measuring.
Top value shown in micrometer is called Plane-pulsating.

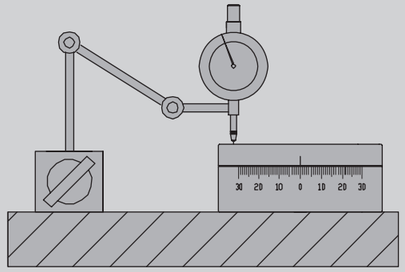

Inspection of Level Z axis (GMT specification)

The stage surface will be slanted caused by transmission components while the stage moves vertically. In order to check if the stage surface is remained in a level, GMT offers one inspection method which is to place 4 inspection meters on the ends of two diagonal lines according to the stage platform, then, check sum of plus and minus figures measured from 4 meters during movement, regard as the level variation of the stage vertical movement.

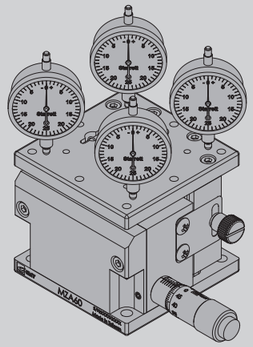

Precision of Rotation center height (GMT specification)

To use a specified inspection tool (meter) (The tool (meter) has been calibrated its circle center matched to the rotation circle center of goniometer stage) to check the tool (meter) indicator changes during repeated movement to examine the circle enter accuracy.

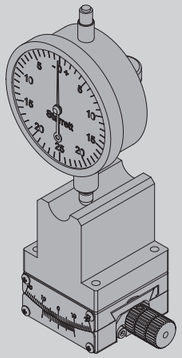

Vertical Z axis (GMT specification)

To check measured figures from the meter applied to the area between limited strokes during vertical movement.
The sum of plus and minus figures measured from the meter means the variation between the movement verticality with base surface.

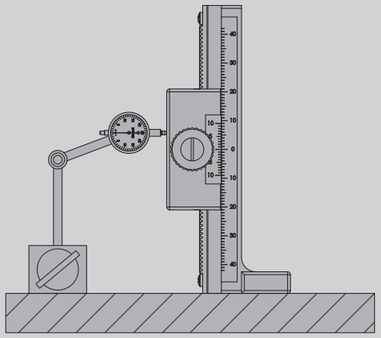

XY Simplified stage (Feeding screws)

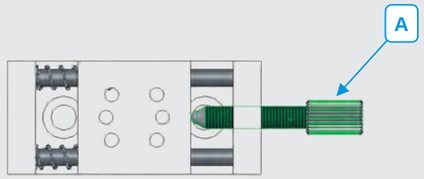

• Remove feeding screws (A)

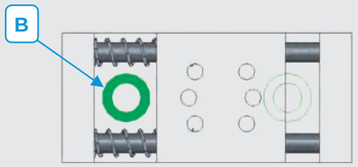

• To have B side fixed with a bolt.

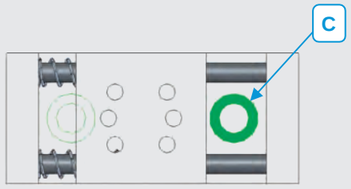

• To have stage table slid to B side.
• To have C side bolt fixed.
• To lock up the feeding screws.

Tilt stage (Thumbscrew type)

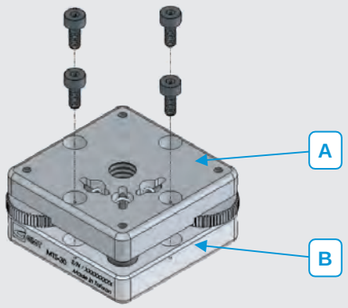

● The mounting holes on the upper plates have been drilled through and (A) counter bores on the lower plate, such design offers an (B)easier assembly to have bolts assembled from upper plate directly.

XY Simplified stage (Threading type)

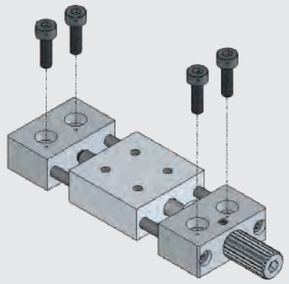

• The stage has been integrated counter bores on left and right sides for mounting.

Leavel Z axis stage

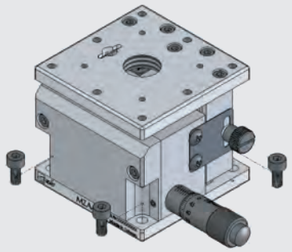

• There are 4 holes reserved for bolts Screw-in on 4 corners of the stage upper surface. It can be screwed-in by the hex-wrench without conflict.

Tilt stage (Feeding screw type)

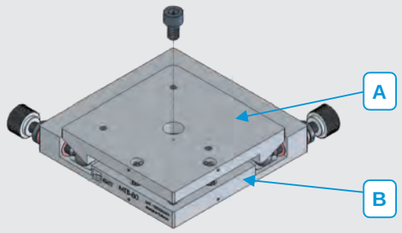

● The mounting holes on the upper (A) plates have been drilled through and counter bores on the low plate, such design offers an easier assembly (B) to have bolts assembled from upper plate directly.

Single axis

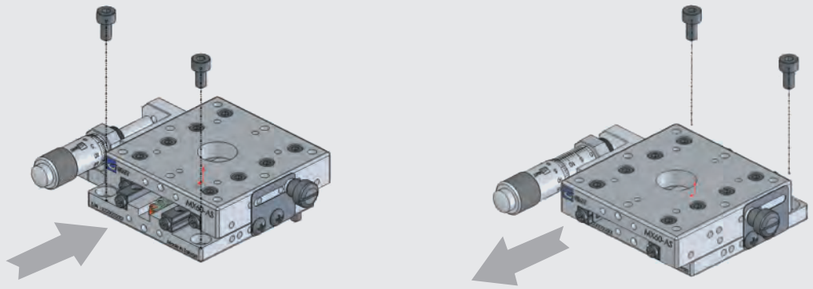

Move upper plate back and forth, and secure the screw on the base plate
And work piece with tight confirmation.

Dual-axes

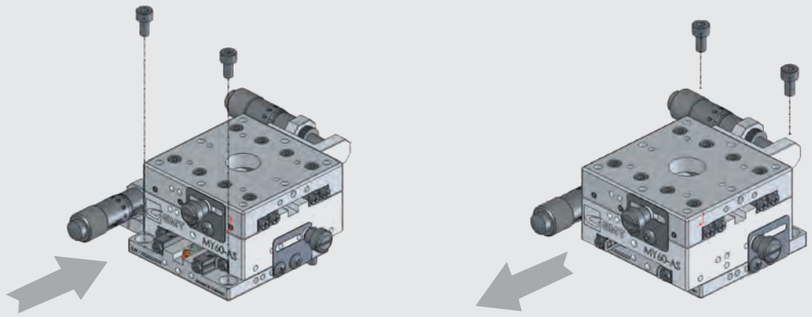

Screw security same as single axis.

θ axes

- ◆Move upper plate by rotating, and take the screw through it.
- ◆Proceed taking screws through base plate in order and finding matched at same time.
- ◆Lock the stage on the work piece with tight confirmation.

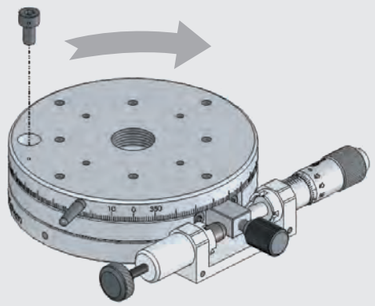

Goniometer stage

Rotate knob clockwise to move plate to the other side.
(Please operate after loosing safety knob), to adjust locked screw into half-secured status.
Next on, please rotate knob anticlockwise to move plate to the other side, and secure the screw on base plate and work piece with tight confirmation.

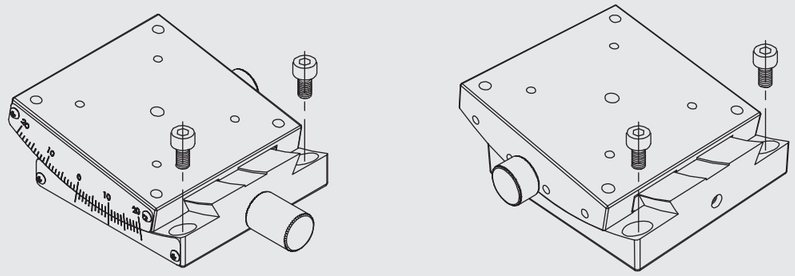

Other stages

Consider easy installation fit for other device, threaded hole pattern is made to meet requirement of securing from upper or lower direction, and this provides more options for installation.

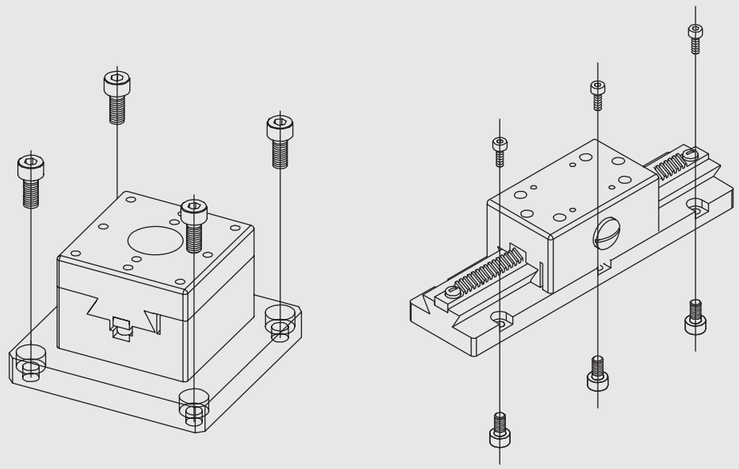

Axes definition

About definition of moving axis and rotating axis, GMT defines as chart below.
X axis, Y axis are in parallel direction: Z axis in vertical direction;
Rotating around X, Y, Z axes are called α axis, βaxis, θaxis individually,

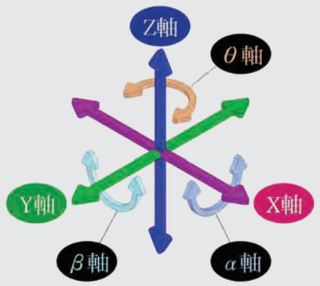

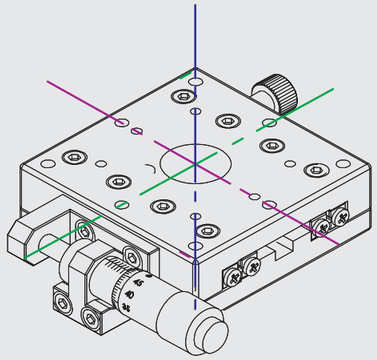

Temperaure of environment

Please operate stages in reqular range of temperature as listed.
Please contact GMT if products in larger range required.

Stages classification	Working temperature
Stainless steel stage	-20°C ～120°C
Stainless steel slide	
Others	-20°C ～70°C

Volume-loaded limit recommendation

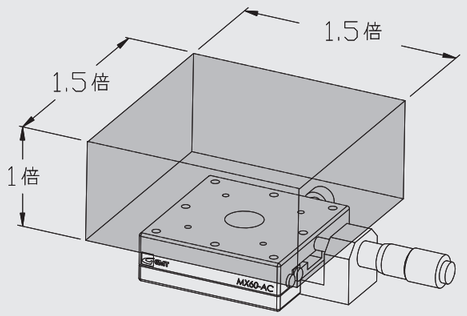

Basic declaration

Diagrams of representative explanation in catalogs are sampled in GMT products series. Products compared to diagrammatic examples in same series may have some difference in shape due to different mechanism design and spec, but basic operation remark are all the same.

Notice

Please read notices as follows before operation, this would have GMT series performed as best motion accuracy and usage life.

Operation principles

1. GMT product series are all composed of parts in high accuracy, please avoidenvironment of extreme high temperature, extreme low temperature, huge temperature variation, exposed to sun light, high humidity, high dust, high vibration, high shock and easy-dewed...etc.
2. To maintain motion accuracy and usage life of products in all series, please check allowable capacity of the product before operation. Don't overload out of rated capacity.
3. Besides allowable capacity limit, please avoid taking gravity of loaed object over the edge of the stage.
4. All kinds of rolling mechanisms set in the product need proper clean and lubricated maintenance in the period of operating, depending on situations of operation, and use appropriate lubricant.
5. All kinds of rolling mechanisms set in the product are adjust are adjusted and leveled by engineers before shipment, please don't try any adjustment if not trained or authorized.
6. Please use right lock unit, tools and wrench torque while processing products in positioning security and connecting security.
7. For accessories of GMT product series or related information, GMT sales could offer best consultation.
8. Special purpose application or other spec, GMT also provide custom-made service.

Manual Stages

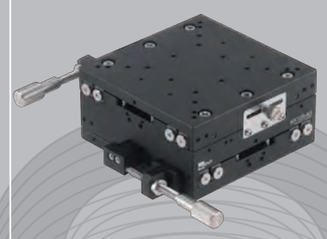

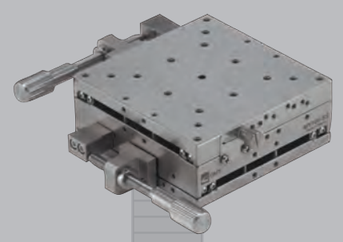

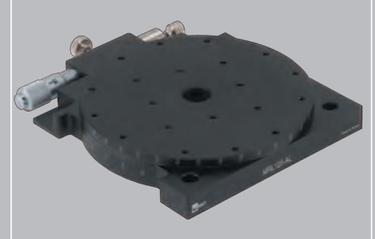

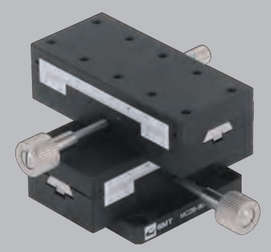

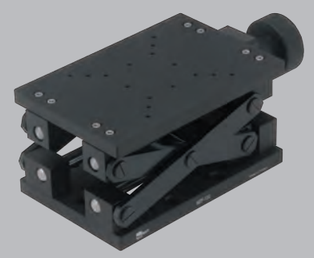

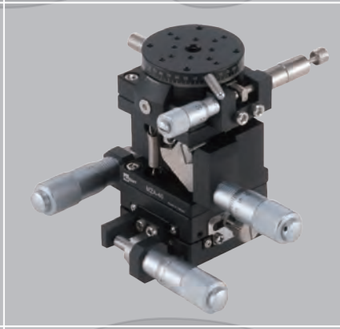

型號說明

M Y 60 - A C - 1 5

傳動方式	軸稱	台面尺寸	材質	規格選定		
				傳動機構位置	軌道方式	傳動工具
M：手動	X：單軸 Y：雙軸 Z：底板托架一體式 R：θ軸 XL：薄型單軸 YL：薄型雙軸 RL：薄型θ軸 LZ：薄型+L板 YW：超薄雙軸 ZL：標準型+L板 YP：薄型貫穿孔雙軸	依不同軸稱有不同規格	A：鋁合金 S：不銹鋼	S：側邊正手 SR：側邊反手 SZ：側邊正手+測頭在上 SZR：側邊反手+測頭在上 C：中央正手 CZ：中央反手 CSR：中央粗調側邊反手微調 L：左邊 R：右邊 V：垂直放置 H：水平放置	1：交叉滾柱導引 2：線性滾珠導引 3：銅套迴轉系統 4：交叉滾柱軸承 5：深溝滾珠軸承 6：雙圓棒導引	3：粗微動測微器(雙測微器式) 4：蝸桿+蝸輪 5：標準測微器 6：粗微動測微器(單測微器二段式) 7：電子式測微器 8：進給式螺牙型 9：滾珠螺桿

進給位置

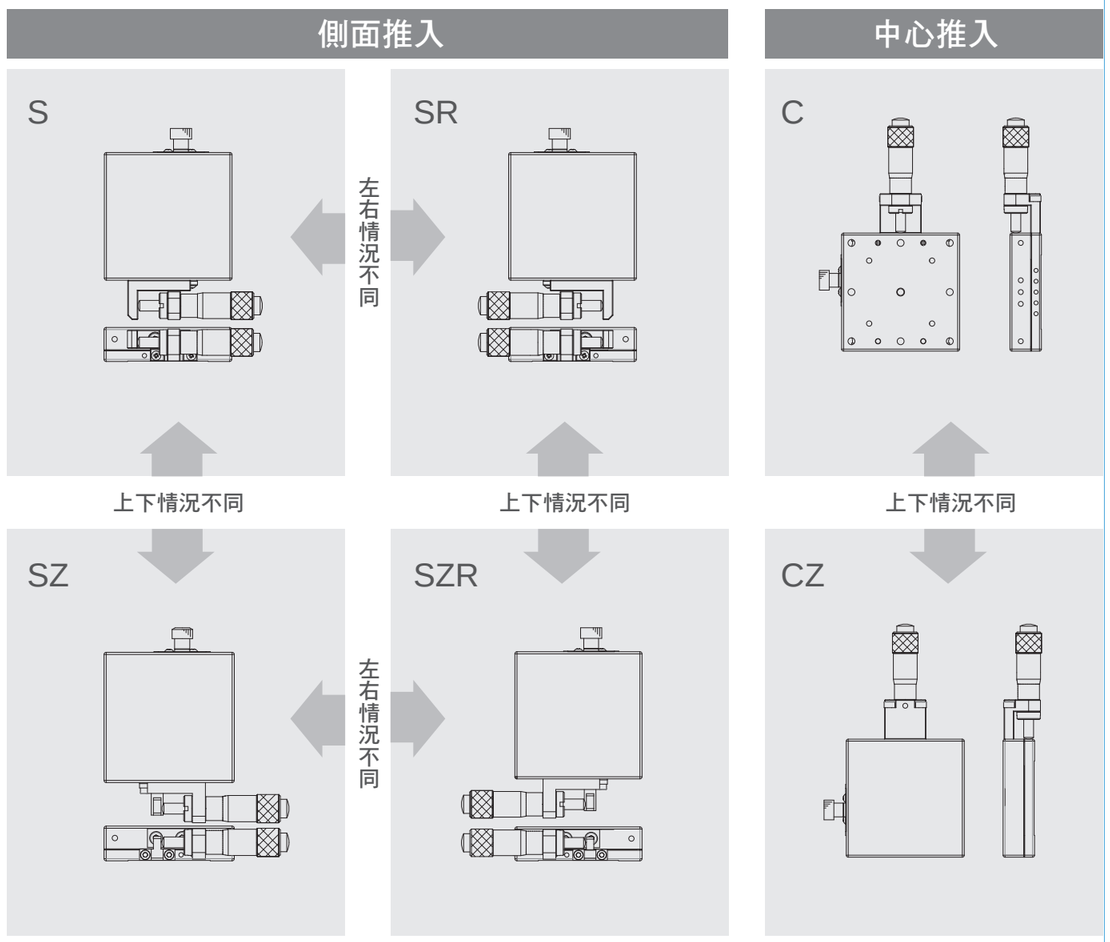

MX20-AC

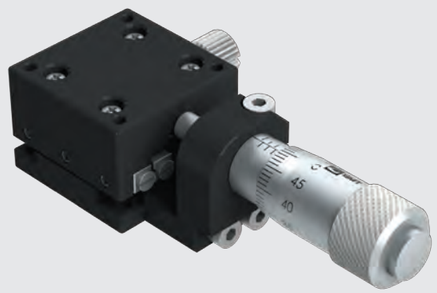

MX20-AS

MY20-AC

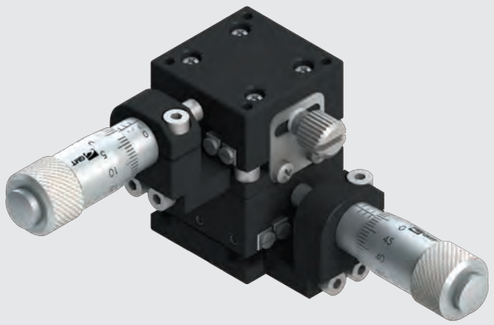

MY20-AS

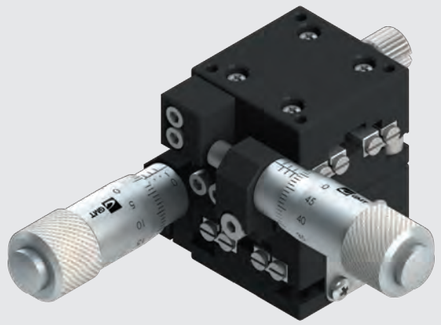

Specification

Unit: mm

Model no.	Table size	Axis	Feed position	Travel stroke	Micrometer minimum reading	Straightness accuracy	Allowable Loading (kgf)	Weight kg	Material	Surface finish
MX20-AC	25*25	X axis	Central	±3.2	10μm	3μm	1	0.03	Aluminum alloy	Black anodized
MX20-AS			Side							
MY20-AC		XY-axis	Central					0.06		
MY20-AS			Side							

MX20-AC

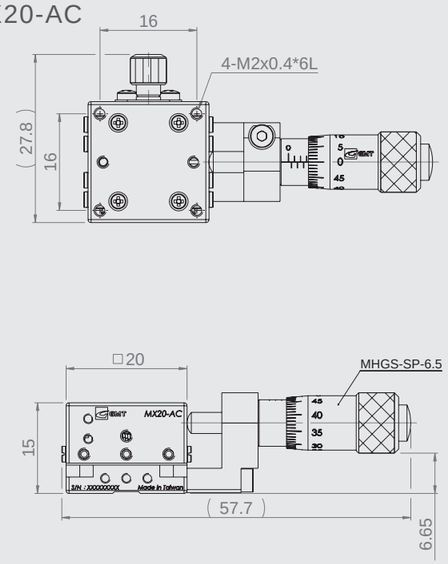

MX20-AS

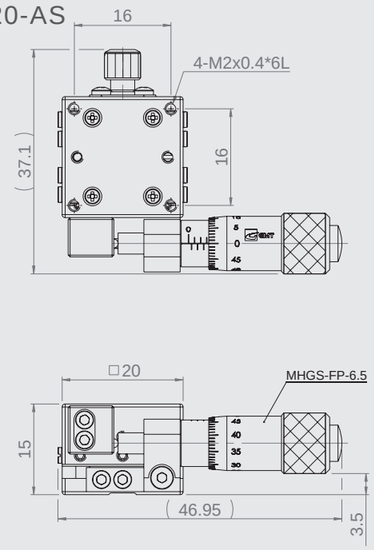

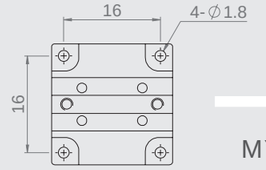

MX(Y)20-A系列
底座安裝孔尺寸

MY20-AC

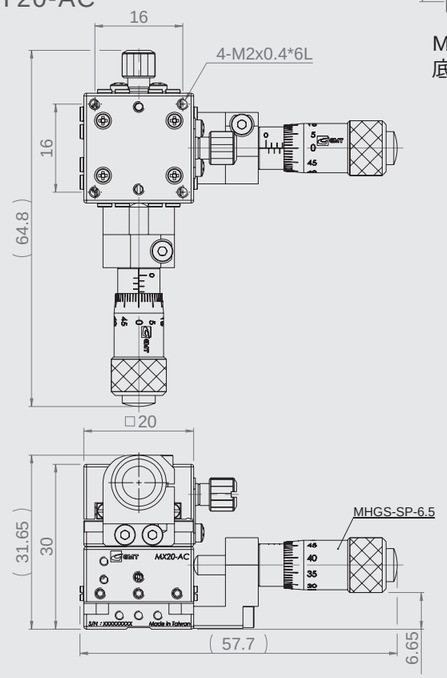

MY20-AS

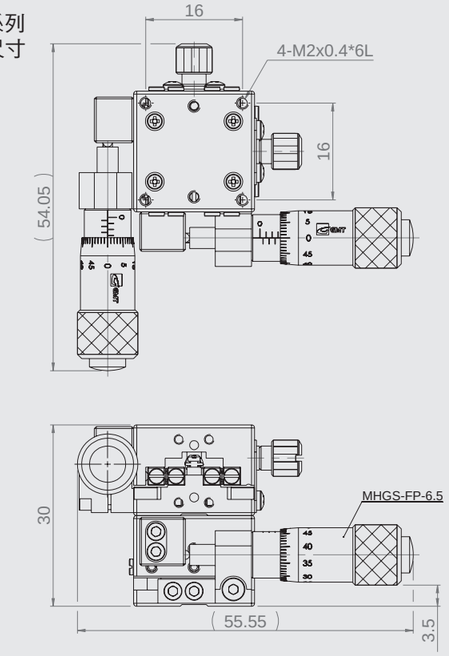

MX25-AC

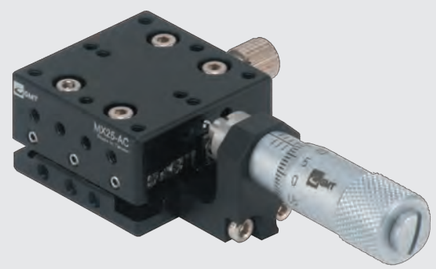

MX25-AS

MY25-AC

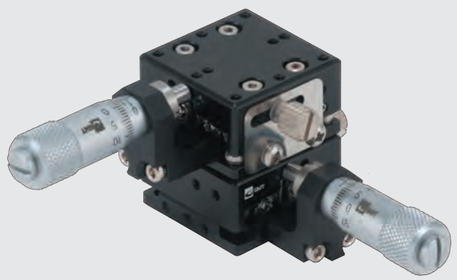

MY25-AS

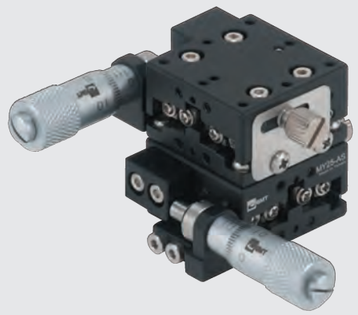

Specification

Unit: mm

Model no.	Table size	Axis	Feed position	Travel stroke	Micrometer minimum reading	Straightness accuracy	Allowable Loading (kgf)	Weight kg	Material	Surface finish
MX25-AC	25*25	X axis	Central	±3.2	10μm	3μm	1	0.04	Aluminum alloy	Black anodized
MX25-AS			Side							
MY25-AC		XY-axis	Central					0.08		
MY25-AS			Side							

MX25-AC

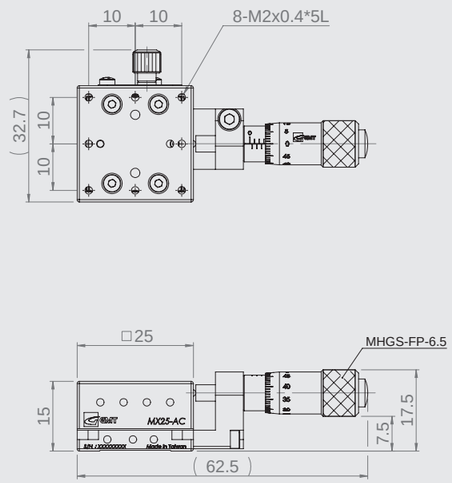

MX25-AS

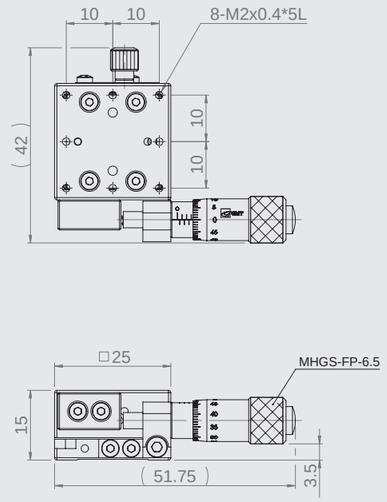

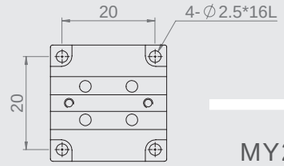

MX(Y)25-A系列
底座安裝孔尺寸

MY25-AC

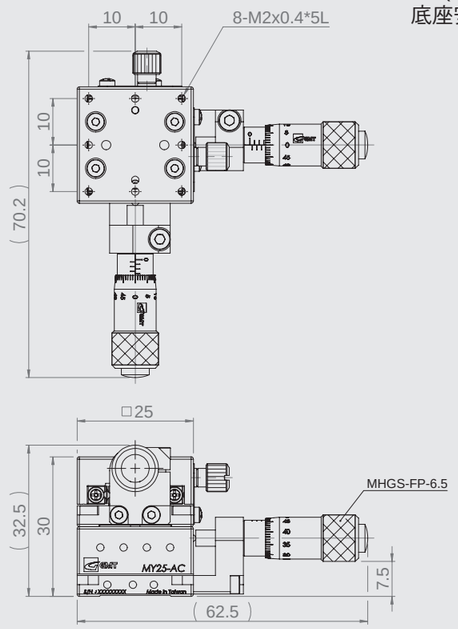

MY25-AS

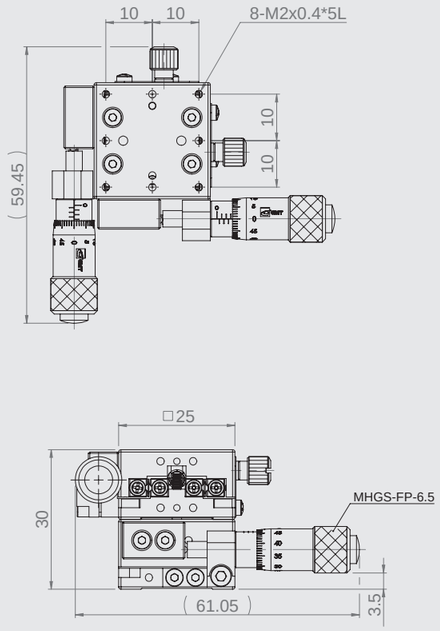

MX30-AC

MX30-AS

MY30-AC

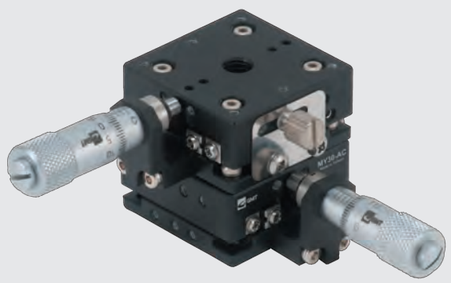

MY30-AS

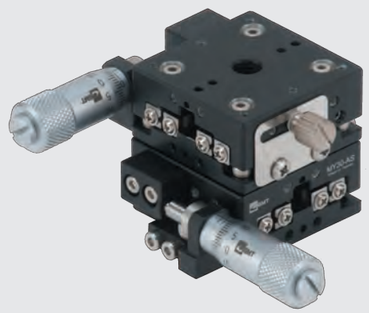

Specification

Unit: mm

Model no.	Table size	Axis	Feed position	Travel stroke	Micrometer minimum reading	Straightness accuracy	Allowable Loading (kgf)	Weight kg	Material	Surface finish
MX30-AC	30*30	X axis	Central	±3.2	10μm	3μm	1.2	0.045	Aluminum alloy	Black anodized
MX30-AS			Side							
MY30-AC		XY-axis	Central					0.09		
MY30-AS			Side							

MX30-AC

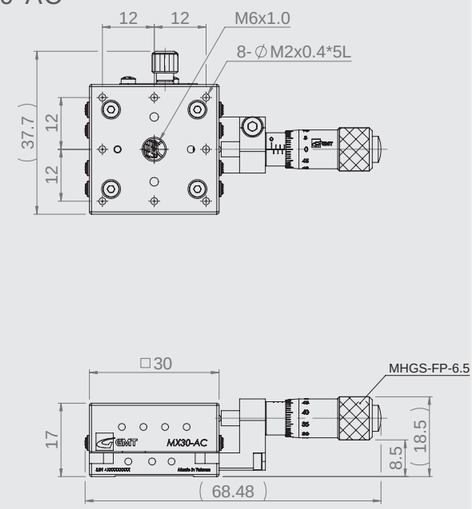

MX30-AS

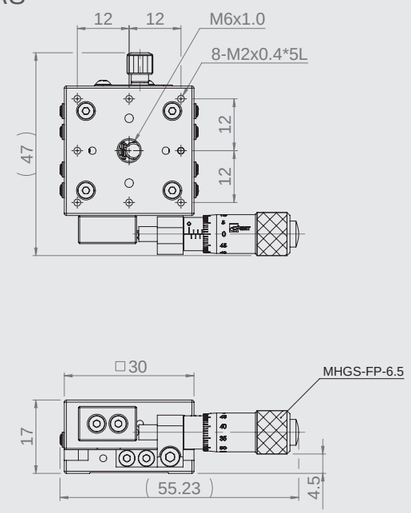

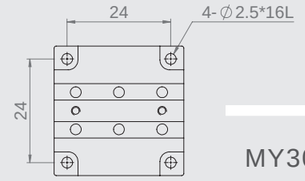

MX(Y)30-A系列
底座安裝孔尺寸

MY30-AC

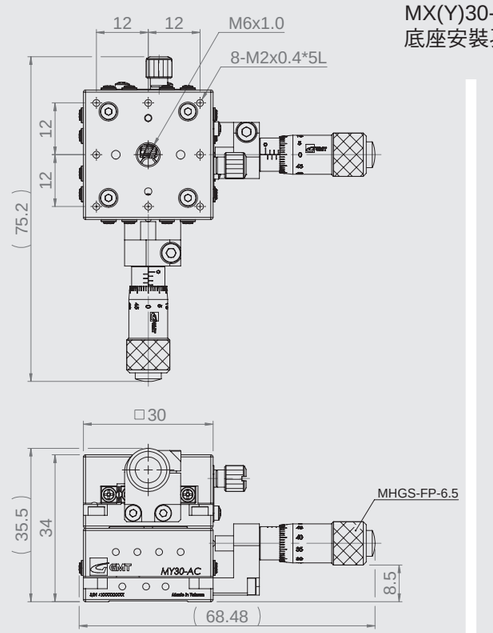

MY30-AS

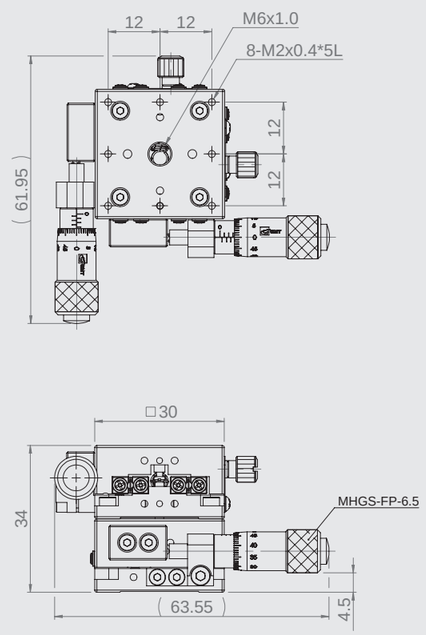

MX40-AC

MX40-AS

MY40-AC

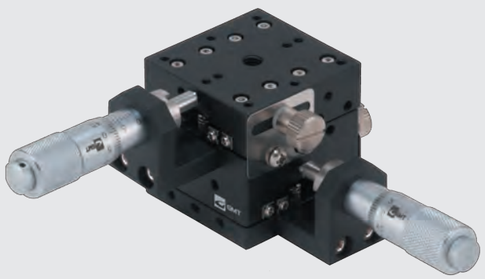

MY40-AS

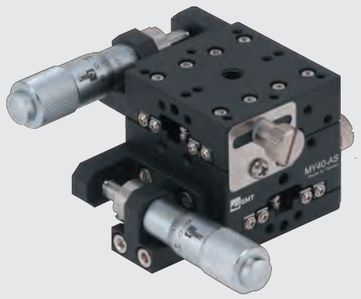

Specification

Unit: mm

Model no.	Table size	Axis	Feed position	Travel stroke	Micrometer minimum reading	Straightness accuracy	Allowable Loading (kgf)	Weight kg	Material	Surface finish
MX40-AC	40*40	X axis	Central	±6.5	10μm	3μm	2.0	0.14	Aluminum alloy	Black anodized
MX40-AS			Side							
MY40-AC		XY-axis	Central				1.8	0.3		
MY40-AS			Side							

MX40-AC

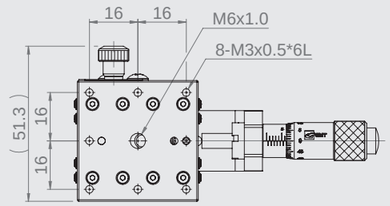

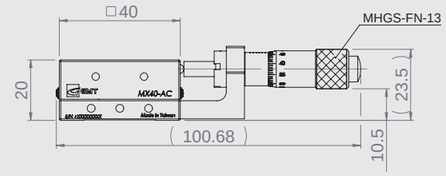

MX40-AS

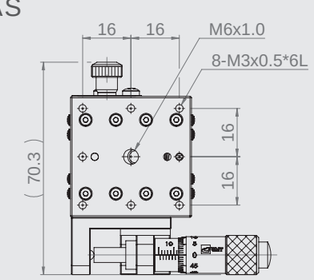

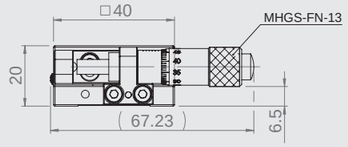

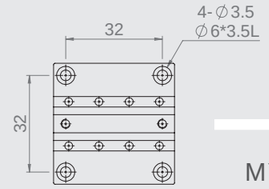

MX(Y)40-A系列
底座安裝孔尺寸

MY40-AC

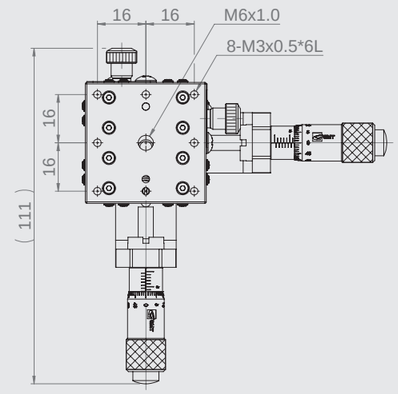

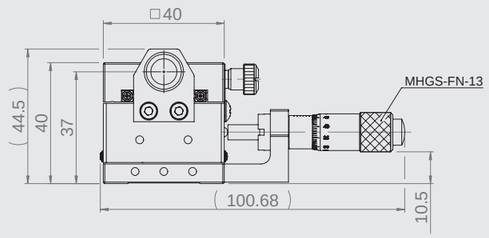

MY40-AS

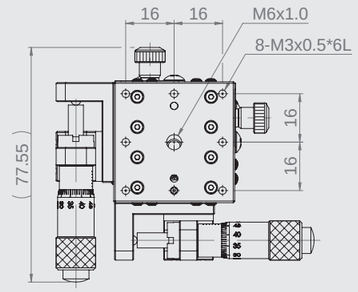

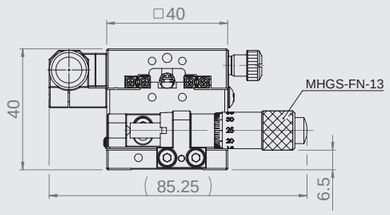

MX50-AC

MX50-AS

MY50-AC

MY50-AS

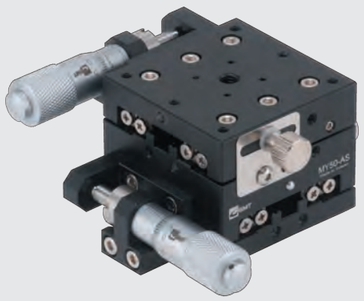

Specification

Unit: mm

Model no.	Table size	Axis	Feed position	Travel stroke	Micrometer minimum reading	Straightness accuracy	Allowable Loading (kgf)	Weight kg	Material	Surface finish
MX50-AC	50*50	X axis	Central	±6.5	10μm	3μm	4	0.22	Aluminum alloy	Black anodized
MX50-AS			Side							
MY50-AC		XY-axis	Central					0.44		
MY50-AS			Side							

Crossed roller stages ▶ X axis and XY-axis ▶ Aluminum alloy
GMT GLOBAL INC.
Crossed roller stages | 40*40

MX50-AC

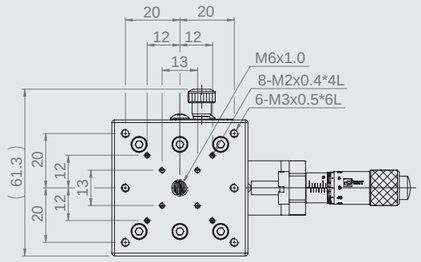

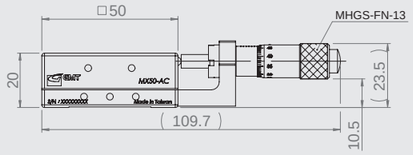

MX50-AS

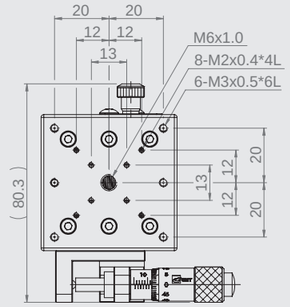

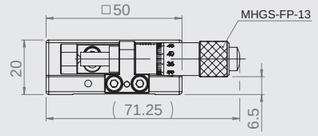

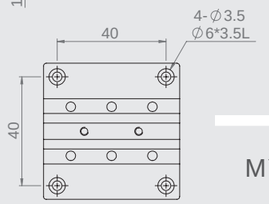

MX(Y)50-A系列
底座安裝孔尺寸

MY50-AC

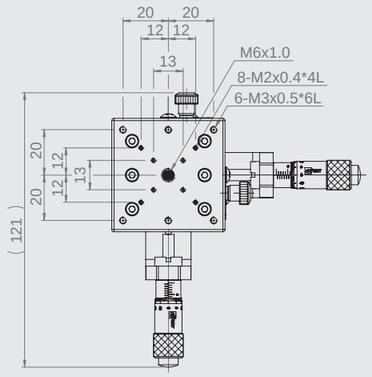

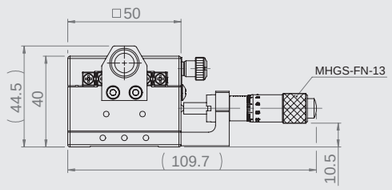

MY50-AS

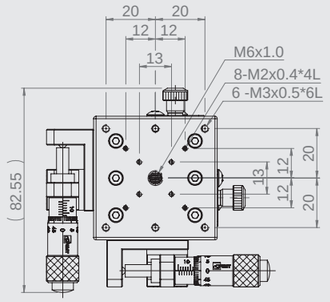

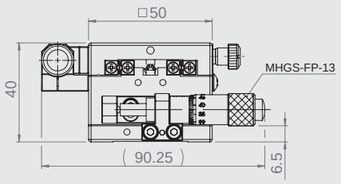

MX60-AC

MX60-AS

MY60-AC

MY60-AS

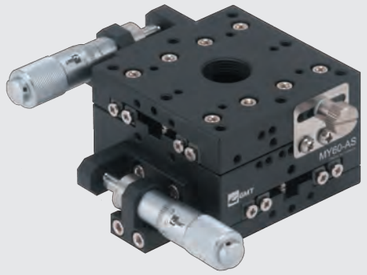

Specification

Unit: mm

Model no.	Table size	Axis	Feed position	Travel stroke	Micrometer minimum reading	Straightness accuracy	Allowable Loading (kgf)	Weight kg	Material	Surface finish
MX60-AC	60*60	X axis	Central	±6.5	10μm	3μm	5.0	0.25	Aluminum alloy	Black anodized
MX60-AS			Side							
MY60-AC		XY-axis	Central				4.5	0.52		
MY60-AS			Side							

Crossed roller guiding ▶ X axis and XY-axis ▶ Aluminum alloy
GMT GLOBAL INC.
Crossed roller stages | 60*60
Crossed roller stages
60*60

MX60-AC

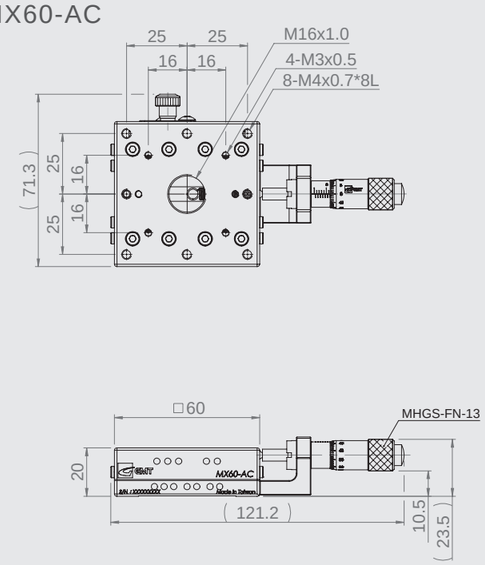

MX60-AS

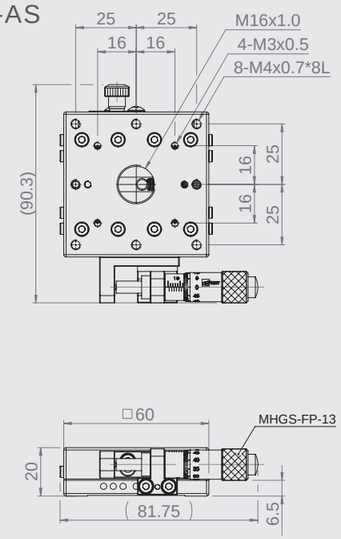

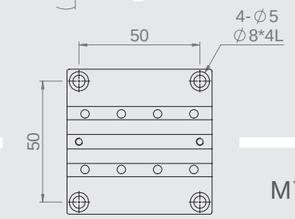

MX(Y)60-A
Mounting dimensions

MY60-AC

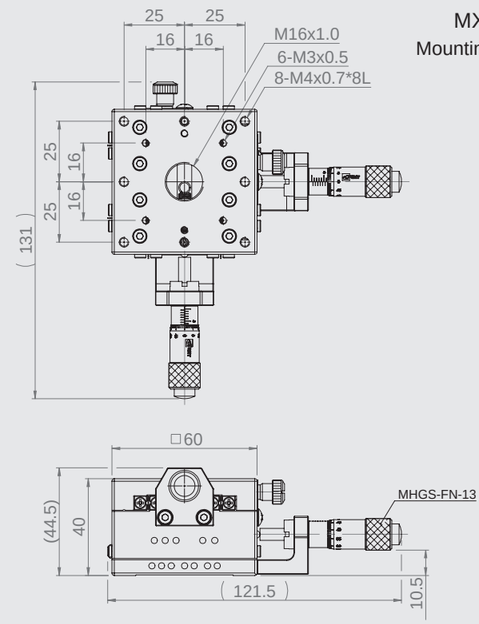

MY60-AS

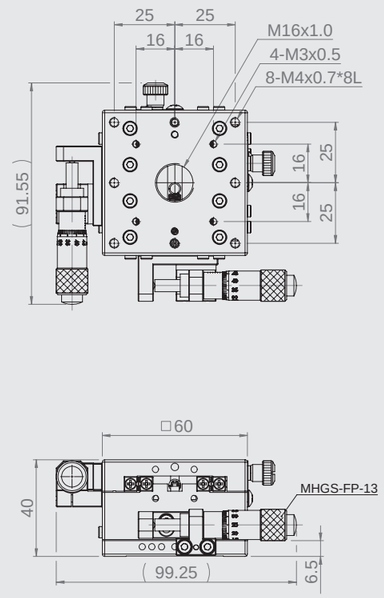

MX70-AC

MX70-AS

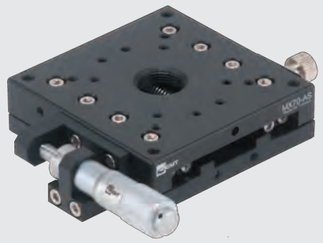

MY70-AC

MY70-AS

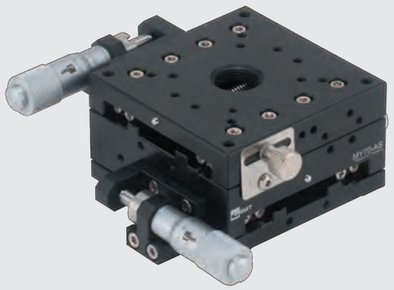

Specification

Unit: mm

Model no.	Table size	Axis	Feed position	Travel stroke	Micrometer minimum reading	Straightness accuracy	Allowable Loading (kgf)	Weight kg	Material	Surface finish
MX70-AC	70*70	X axis	Central	±6.5	10μm	3μm	6	0.44	Aluminum alloy	Black anodized
MX70-AS			Side							
MY70-AC		XY-axis	Central					0.88		
MY70-AS			Side							

MX70-AC

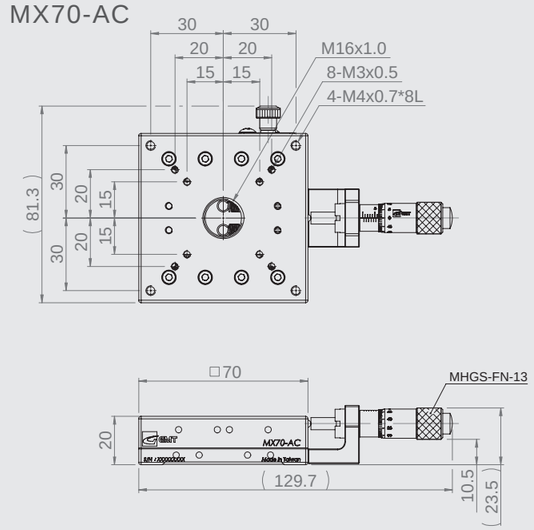

MX70-AS

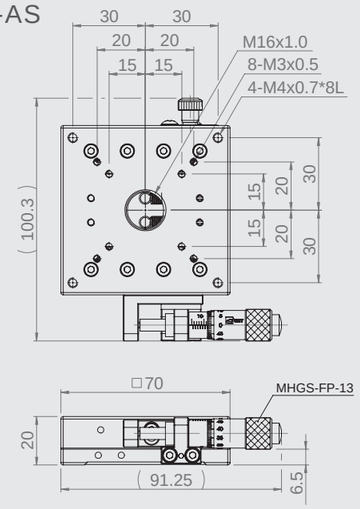

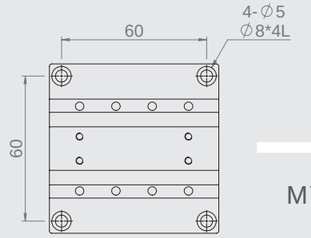

MX(Y)70-A
Mounting dimensions

MY70-AC

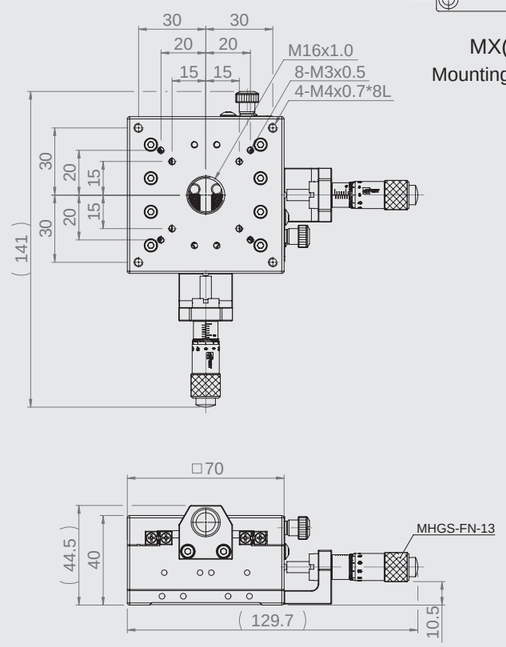

MY70-AS

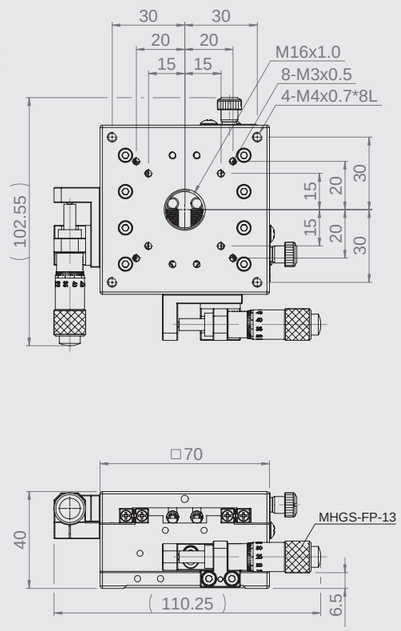

MX80-AC

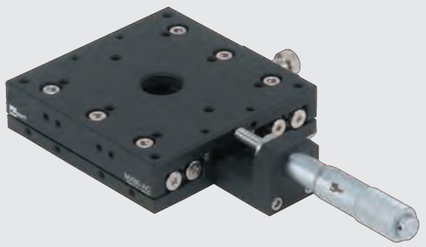

MX80-AS

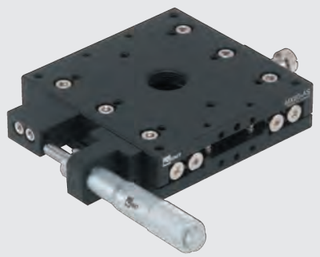

MY80-AC

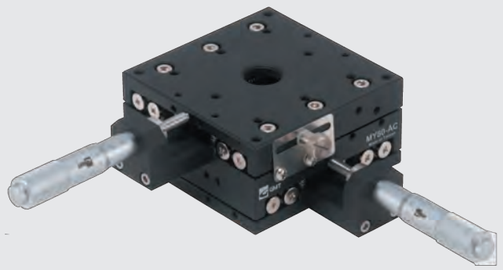

MY80-AS

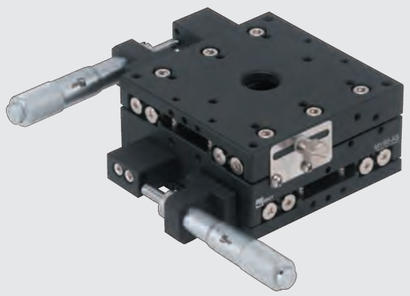

Specification

Unit: mm

Model no.	Table size	Axis	Feed position	Travel stroke	Micrometer minimum reading	Straightness accuracy	Allowable Loading (kgf)	Weight kg	Material	Surface finish
MX80-AC	80*80	X axis	Central	±12.5	10μm	3μm	10	0.5	Aluminum alloy	Black anodized
MX80-AS			Side							
MY80-AC		XY-axis	Central				9.5	1		
MY80-AS			Side							

MX80-AC

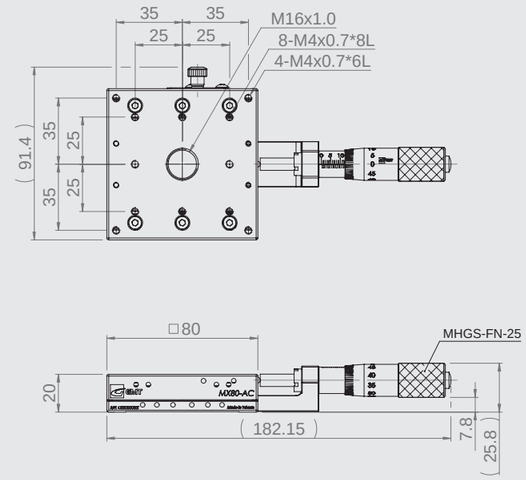

MX80-AS

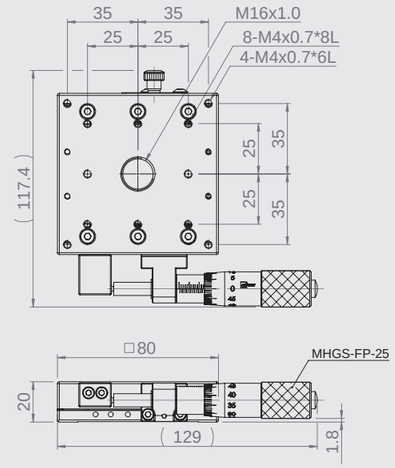

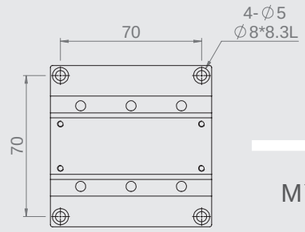

MX(Y)80-A
Mounting dimensions

MY80-AC

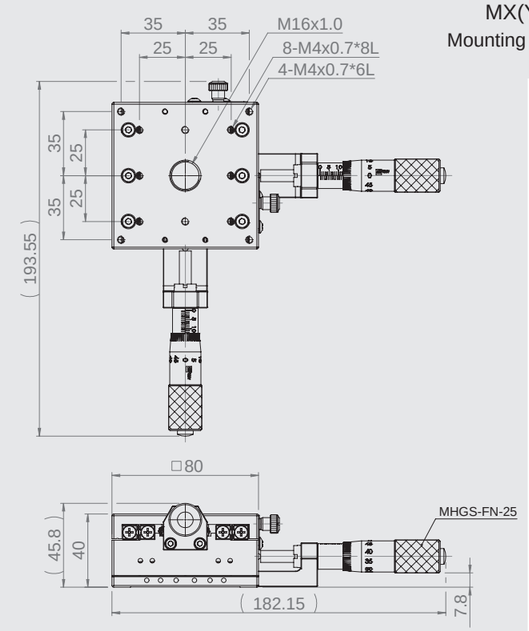

MY80-AS

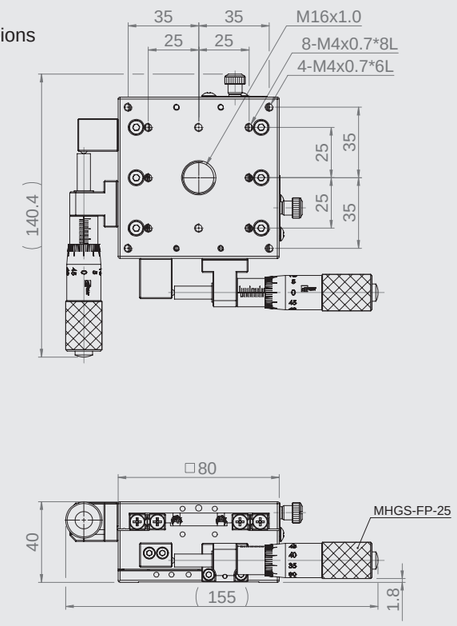

MX100-AC

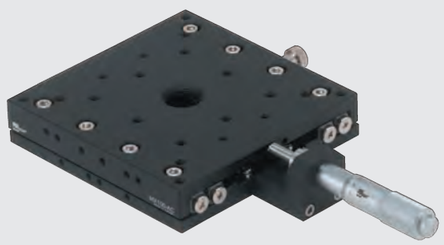

MX100-AS

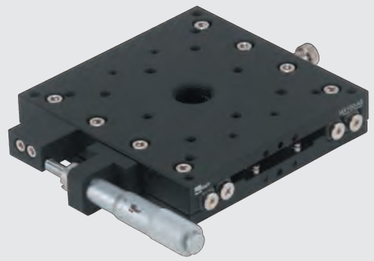

MY100-AC

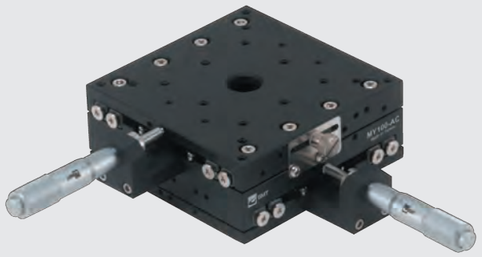

MY100-AS

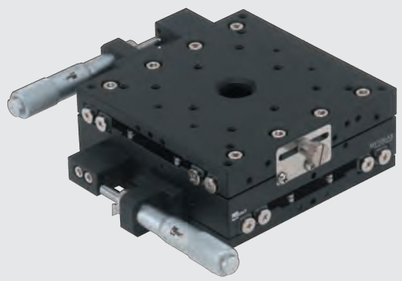

Specification

Unit: mm

Model no.	Table size	Axis	Feed position	Travel stroke	Micrometer minimum reading	Straightness accuracy	Allowable Loading (kgf)	Weight kg	Material	Surface finish
MX100-AC	100*100	X axis	Central	±12.5	10μm	3μm	15	0.7	Aluminum alloy	Black anodized
MX100-AS			Side							
MY100-AC		XY-axis	Central				14.3	1.4		
MY100-AS			Side							

Crossed roller guiding ▶ X axis and XY-axis ▶ Aluminum alloy
GMT GLOBAL INC.
Crossed roller stages | 100*100

MX100-AC

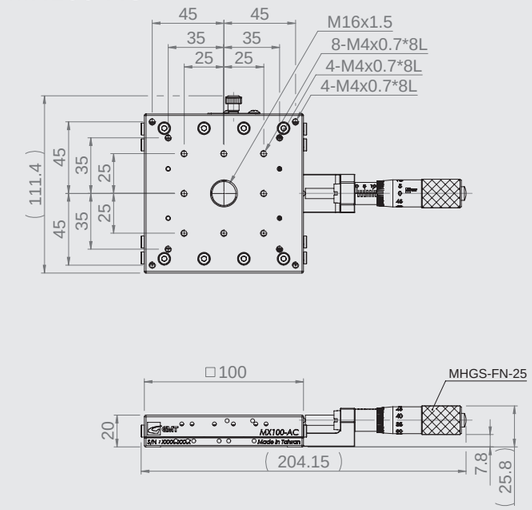

MX100-AS

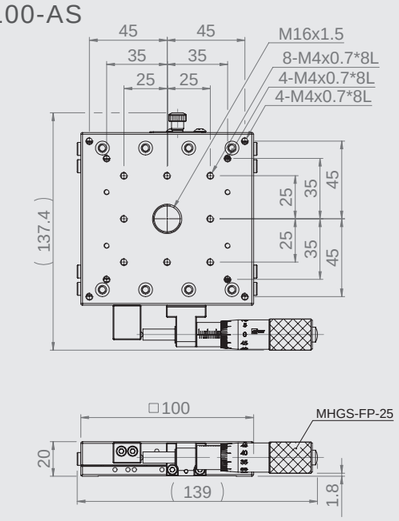

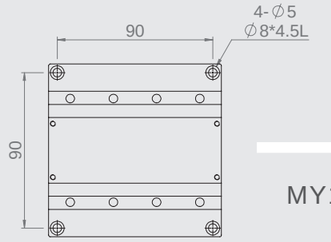

MX(Y)100-A
Mounting dimensions

MY100-AC

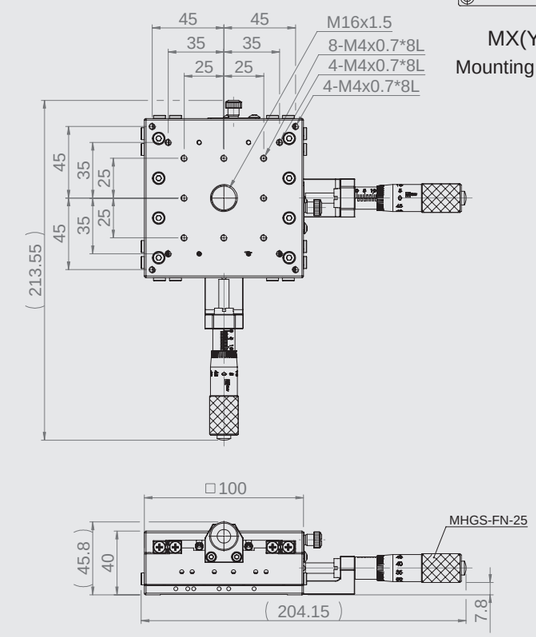

MY100-AS

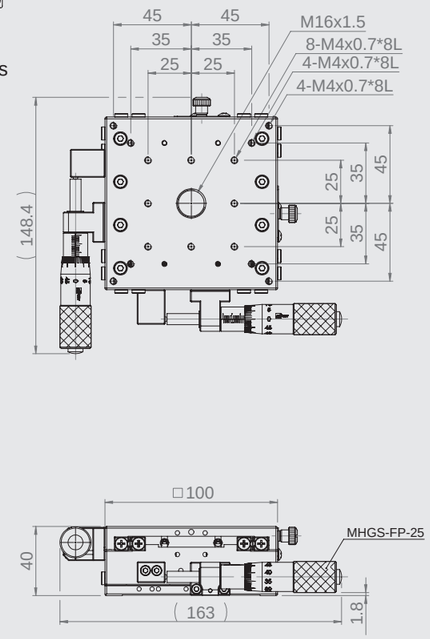

MX120-AC

MX120-AS

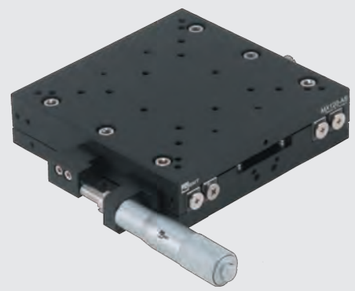

MY120-AC

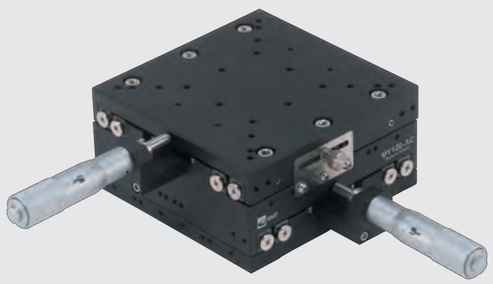

MY120-AS

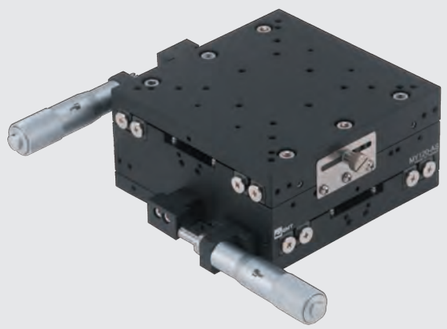

Specification

Unit: mm

Model no.	Table size	Axis	Feed position	Travel stroke	Micrometer minimum reading	Straightness accuracy	Allowable Loading (kgf)	Weight kg	Material	Surface finish
MX120-AC	120*120	X axis	Central	±12.5	10μm	3μm	20	1.6	Aluminum alloy	Black anodized
MX120-AS			Side							
MY120-AC		XY-axis	Central				18.4	3.2		
MY120-AS			Side							

Crossed roller guiding ▶ X axis and XY-axis ▶ Aluminum alloy
GMT GLOBAL INC.
Crossed roller stages | 120*120

MX120-AC

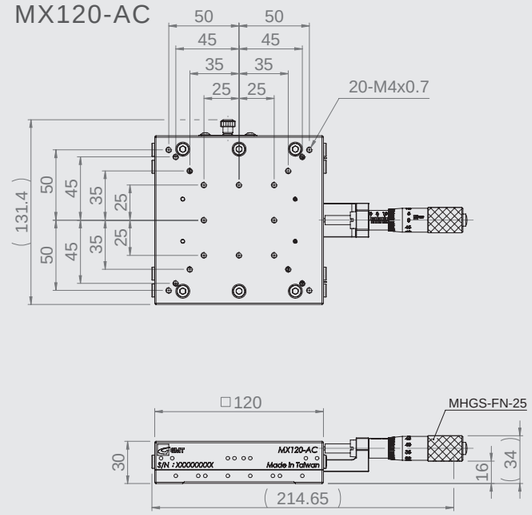

MX120-AS

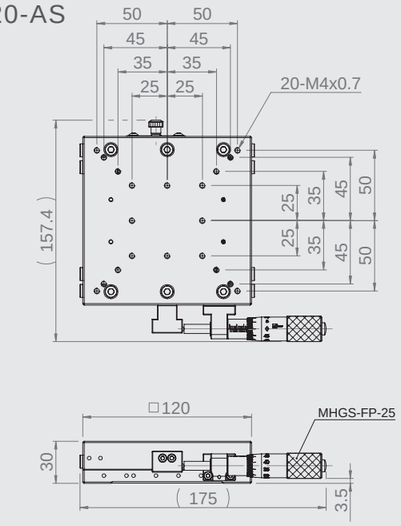

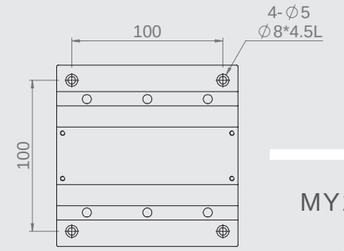

MX(Y)120-A
Mounting dimensions

MY120-AC

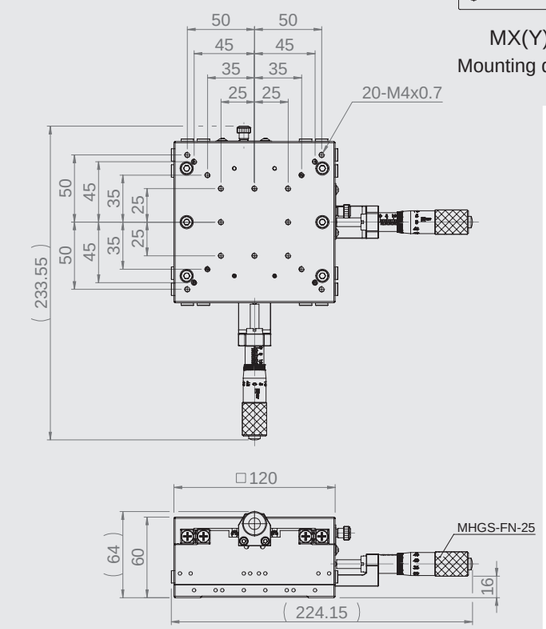

MY120-AS

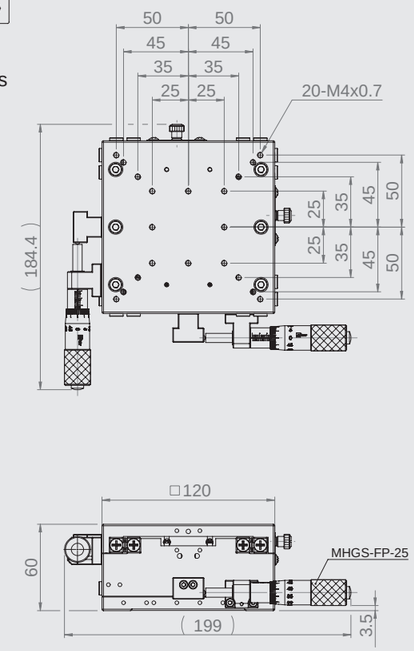

MZL□□-ACR

Specification

Unit: mm

Model no.	Table size	Travel Distance	Micrometer minimum reading	Movement Accuracy			Allowable	Weight	Material	Surface finish
				Straightness	Pitching	Yawing	Loading (kgf)	kg		
MZL25-ACR	25*25	±3.2	10μm	3μm	25"	15"	0.5	0.06	Aluminum alloy	Black anodized
MZL40-ACR	40*40	±6.5					1.0	0.2		
MZL60-ACR	60*60						2.0	0.45		
MZL80-ACR	80*80	±12.5					5.0	0.8		

★ 其他 Z 軸用托架規格選擇，請參閱 P.231 ~ P.232

MZL25-ACR

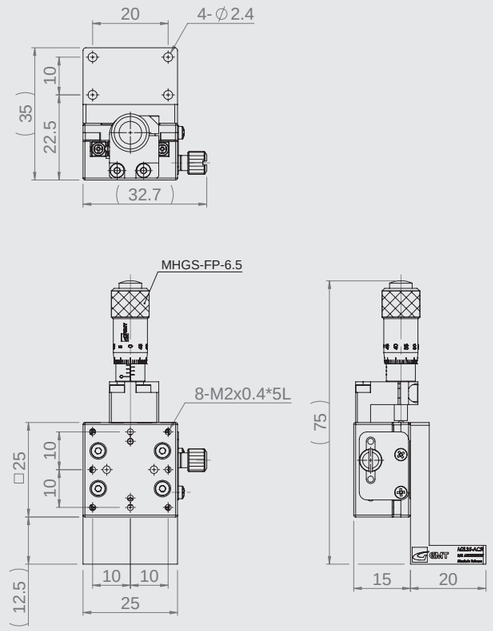

MZL40-ACR

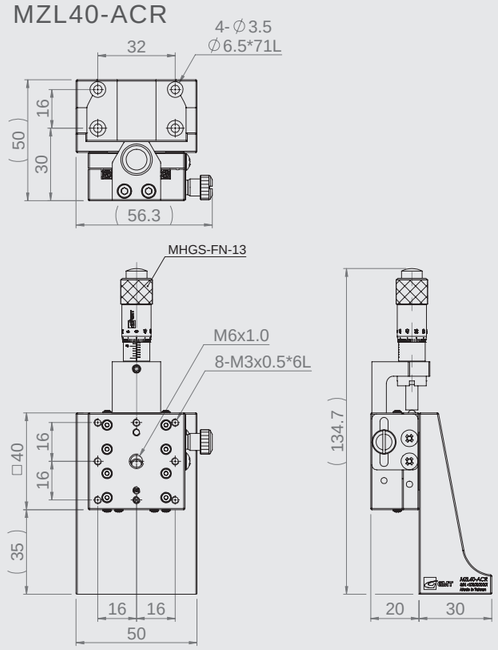

MZL60-ACR

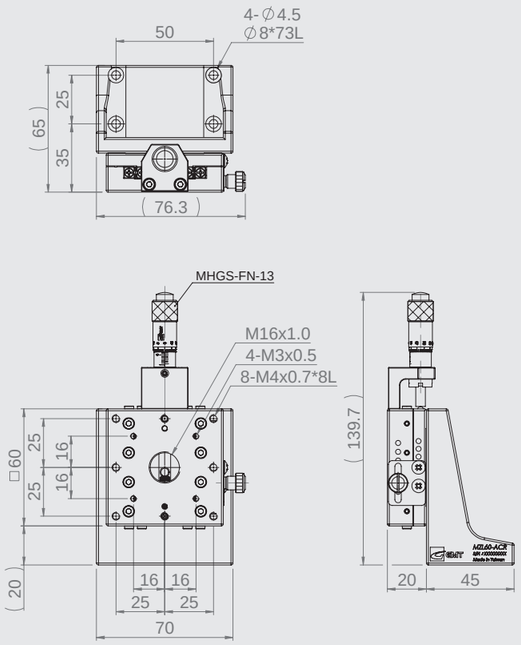

MZL80-ACR

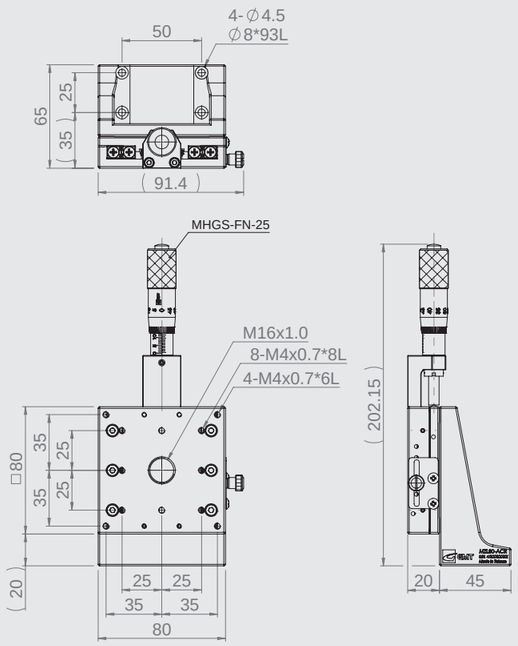

MZL25-AS

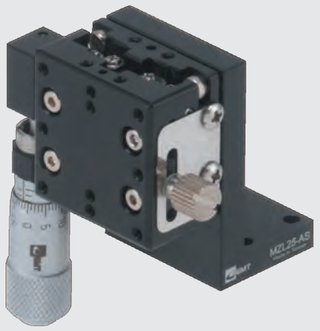

MZL40-AS

MZL60-AS

MZL80-AS

Specification

Unit: mm

Model no.	Table size	Travel Distance	Micrometer minimum reading	Movement Accuracy			Allowable	Weight	Material	Surface finish
				Straightness	Pitching	Yawing	Loading (kgf)	kg		
MZL25-AS	25*25	±3.2	10μm	3μm	30"	20"	0.5	0.06	Aluminum alloy	Black anodized
MZL40-AS	40*40	±6.5			25"	15"	1.0	0.2		
MZL60-AS	60*60						2.0	0.45		
MZL80-AS	80*80	±12.5					5.0	0.8		

★ 其他 Z 軸用托架規格選擇，請參閱 P.231 ~ P.232

MZL25-AS

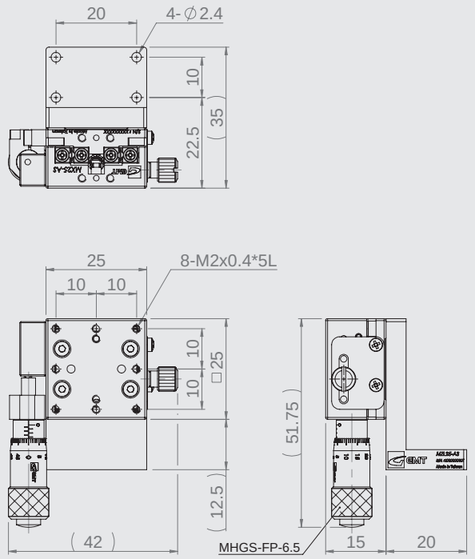

MZL40-AS

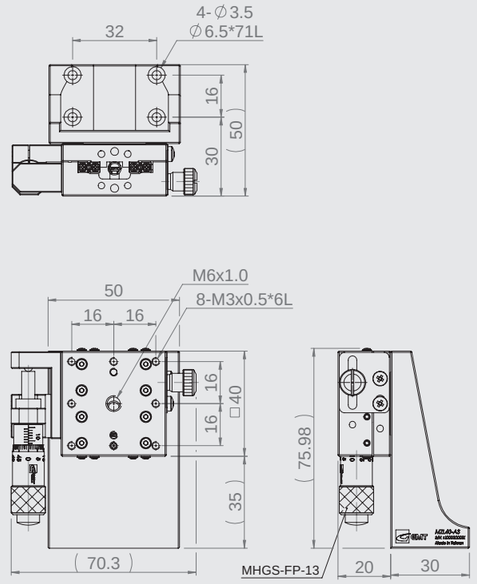

MZL60-AS

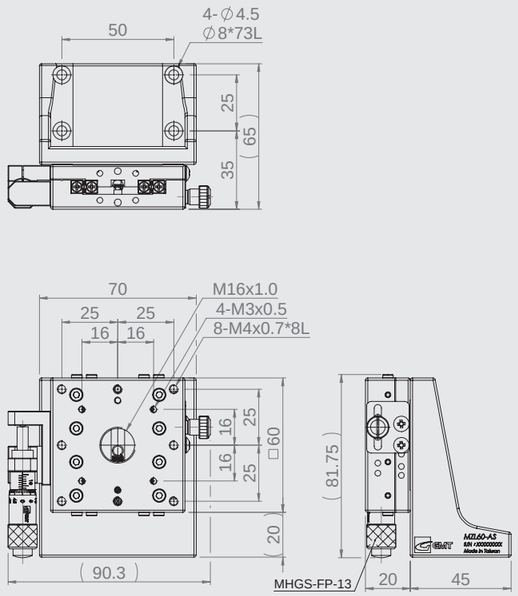

MZL80-AS

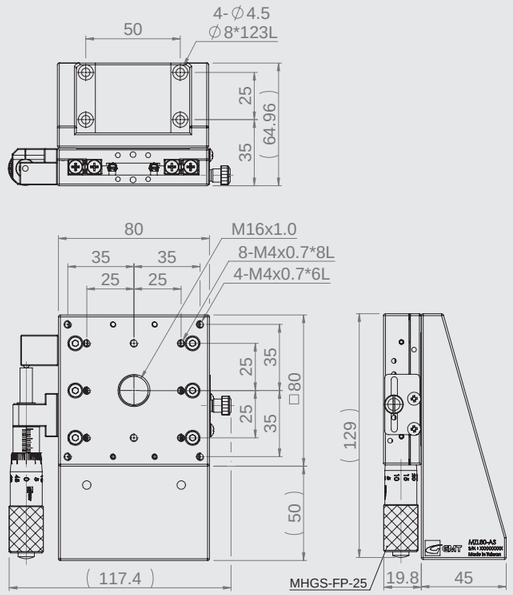

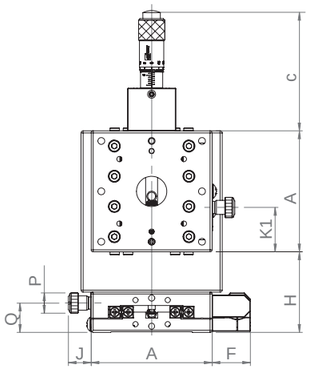

Front side viewing

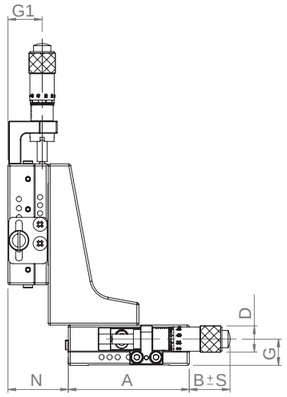

Right side viewing

Unit: mm

Position of Micrometer				
Specification	Side up 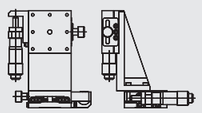	Side down 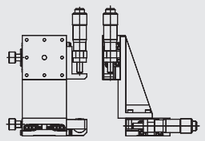	Central 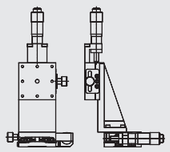	Reversed 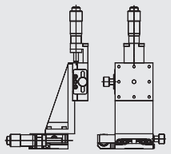
Code	C	CU	A	R

Specification

Unit: mm

Model no.		Detail dimension from front side viewing							Detail dimensions from right side viewing				
Type	A	H	C	K1	P	Q	J	F	B ± S (Movement)	N	D	G	G1
MXZ	25	27.6	37.5	15.1	6	10.6	7.7	9	26.7±3.2	10.1	10	8.5	12.5
	30	35	37.5	12.5	6	10.5	7.7	9	24.3±3.2	7	10	8.5	12.5
	40	55	62	28	10	14.5	11.2	19	26.3±6.5	10	13	13	17
	50	40	59.7	33	10	14.5	11.2	19	21.3±6.5	5	13	13	17
	60	39.9	59.7	17.4	10	14.4	11.2	19	20.2±6.5	5	13	13	17
	70	39.9	59.7	53.5	10	14.4	11.2	19	21.3±6.5	25	13	13	17
	80	40	100.7	25	10	14.5	11.2	24	54.5±12.5	20	18	10.8	16.5
	100	60	100.7	56	10	14.5	11.2	24	35.5±12.5	36	18	10.8	16.7
	120	65	100.7	52	10	18	11.2	24	51.5±12.5	7	18	12.5	17.5

Model no.	Table size	Allowable Loading (kgf)	Straightness accuracy	Pitching	Yawing	Axis	Weight kg	Material	Surface finish
MXZ25-A	25*25	1	5 μm	30"	25"	XZ	0.11	Aluminum alloy	Black anodized
MXZ30-A	30*30			25"	15"		0.14		
MXZ40-A	40*40						0.38		
MXZ50-A	50*50						0.52		
MXZ60-A	60*60	2					0.74		
MXZ70-A	70*70						0.81		
MXZ80-A	80*80	5					1.37		
MXZ100-A	100*100						2.39		
MXZ120-A	120*120						3.02		

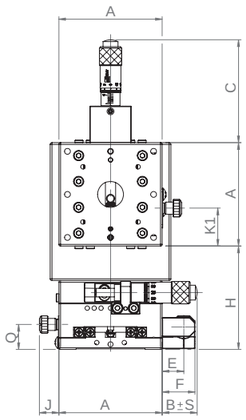

Front side viewing

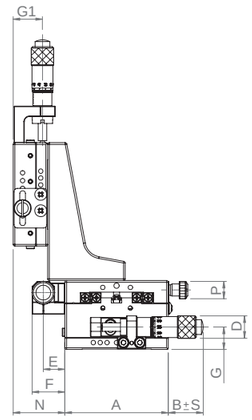

Right side viewing

Unit: mm

Position of Micrometer				
Specification	Side up 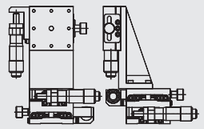	Side down 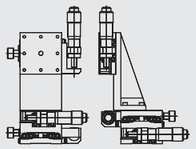	Central 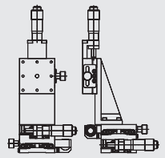	Reversed 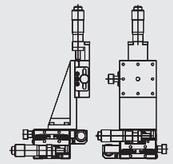
Code	C	CU	A	R

Specification

Unit: mm

Model no.		Detail dimension from front side viewing							Detail dimensions from right side viewing					
Type	A	H	C	K1	Q	J	F	E	B ± S (Movement)	N	D	G	G1	P
MXYZ	25	42.6	37.5	15	10.6	7.7	9	4.5	26.8±3.2	20.1	10	8.5	12.5	6
	30	50	37.5	12.5	10.5	7.7	9	4.5	24.3±3.2	19	10	8.5	12.5	6
	40	75	59.7	28	14.5	11.2	19	12.5	26.3±6.5	26	13	13	17	10
	50	60	59.7	33	14.5	11.2	19	12.5	21.3±6.5	25	13	13	17	10
	60	60	59.7	17.5	14.4	11.2	19	12.5	20.3±6.5	30	13	13	17	10
	70	60	59.7	53.5	14.4	11.2	19	12.5	21.3±6.5	25	13	13	17	10
	80	60	100.7	25	14.5	11.2	24	17	54.5±12.5	20	13	10.8	16.5	10
	100	80	100.7	56	14.5	11.2	24	17	35.5±12.5	36	18	10.8	16.7	10
	120	95	100.7	52	18	11.2	24	17	51.5±12.5	27	18	12.5	17.5	10

Model no.	Table size	Allowable Loading (kgf)	Straightness accuracy	Pitching	Yawing	Axis	Weight kg	Material	Surface finish
MXYZ25-A	25*25	1	5 μm	30"	25"	XYZ	0.16	Aluminum alloy	Black anodized
MXYZ30-A	30*30			25"	15"		0.2		
MXYZ40-A	40*40						0.53		
MXYZ50-A	50*50						0.72		
MXYZ60-A	60*60	2					1.01		
MXYZ70-A	70*70						1.14		
MXYZ80-A	80*80	5					1.92		
MXYZ100-A	100*100						3.12		
MXYZ120-A	120*120						4.48		

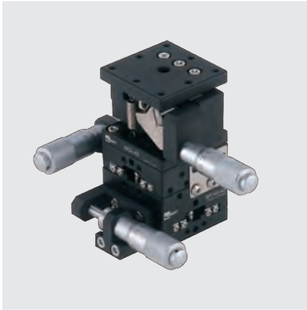

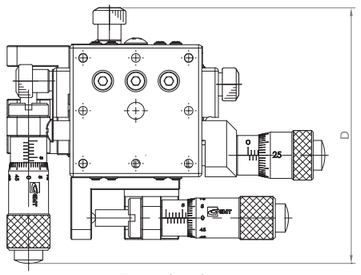

Top viewing

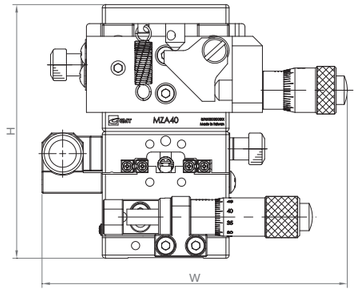

Front side viewing

Model no.	Multiple axes			Table size (mm)	Outline dimensions (mm)			Travel stroke (mm)				Allowable loading (kgf)	Weight (kg)
規格編碼	Base	Middle	Top		W	D	H	X	Y	Z	θ		
MXYZA40–A	MY40–AS	—	MZA–40	40×40	96.25	77.45	80	±6.5	±6.5	±3.0	—	1	0.51
MXYZA60–A	MY60–AS	—	MZA–60	60×60	117.5	91.45	95			±5.0	—	4	1.07
MXYZA80–A	MY80–AS	—	MZA–80	80×80	160.5	145.7	95	±12.5	±12.5		—	3	2.09

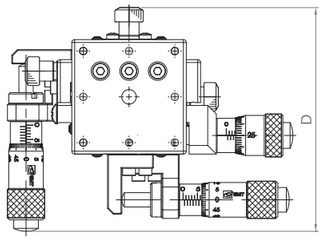

Top viewing

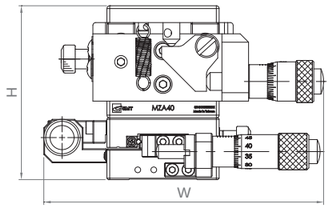

Front side viewing

Model no.	Multiple axes			Table size (mm)	Outline dimensions (mm)			Travel stroke (mm)				Allowable loading (kgf)	Weight (kg)
規格編碼	Base	Middle	Top		W	D	H	X	Y	Z	θ		
MXYWZA40–A	MYW40–AS	—	MZA–40	40×40	99.75	78.2	62	±6.5	±6.5	±3.0	—	0.8	0.44
MXYWZA60–A	MYW60–AS	—	MZA–60	60×60	121	96.2	77			±5.0	—	2.4	0.9
MXYWZA80–A	MYW80–AS	—	MZA–80	80×80	154.5	126.7	77	±12.5	±12.5		—	3	1.82

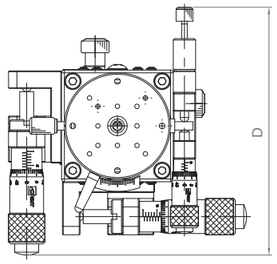

Top viewing

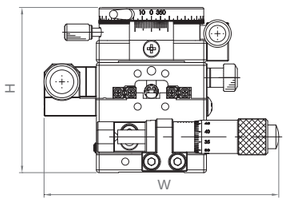

Front side viewing

Model no.	Multiple axes			Table size (mm)	Outline dimensions (mm)			Travel stroke (mm)				Allowable loading (kgf)	Weight (kg)
規格編碼	Base	Middle	Top		W	D	H	X	Y	Z	θ		
MXYR38–A	MY40–AS	—	MR38–A	Ø38	85.25	88.75	60	±6.5	±6.5	—	Coarse360° Fine±0.5°	1	0.42
MXYR60–A	MY60–AS	—	MR60–A	Ø60	99.25	109	65			—		3	0.87
MXYR85–A	MY80–AS	—	MR85–A	Ø85	160.5	150	65	±12.5	±12.5	—		4	1.62

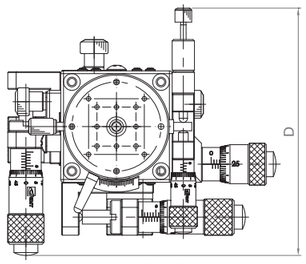

Top viewing

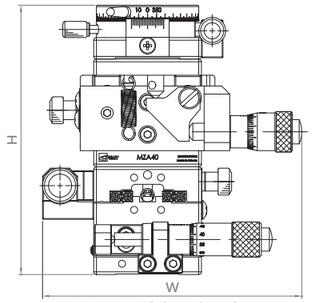

Front side viewing

Model no.	Multiple axes			Table size (mm)	Outline dimensions (mm)			Travel stroke (mm)				Allowable loading (kgf)	Weight (kg)
規格編碼	Base	Middle	Top		W	D	H	X	Y	Z	θ		
MXYZAR38–A	MY40–AS	MZA–40	MR38–A	Ø38	96.25	88.75	100	±6.5	±6.5	±3.0	Coarse360° Fine±0.5°	0.9	0.63
MXYZAR60–A	MY60–AS	MZA–60	MR60–A	Ø60	117.5	109	119.5			±5.0		3	1.4
MXYZAR85–A	MY80–AS	MZA–80	MR85–A	Ø85	160.5	150	120	±12.5	±12.5			2.5	2.64

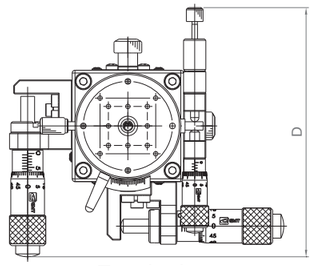

Top viewing

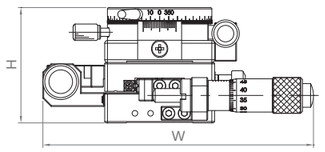

Front side viewing

Model no.	Multiple axes			Table size (mm)	Outline dimensions (mm)			Travel stroke (mm)				Allowable loading (kgf)	Weight (kg)
規格編碼	Base	Middle	Top		W	D	H	X	Y	Z	θ		
MXYWR38–A	MYW40–AS	—	MR38–A	Ø38	98.5	89.5	42	±6.5	±6.5	—	Coarse360° Fine±0.5°	0.9	0.35
MXYWR60–A	MYW60–AS	—	MR60–A	Ø60	103	109	47			—		2.7	0.7
MXYWR85–A	MYW80–AS	—	MR85–A	Ø85	153.5	130	47	±12.5	±12.6	—		3.5	1.34

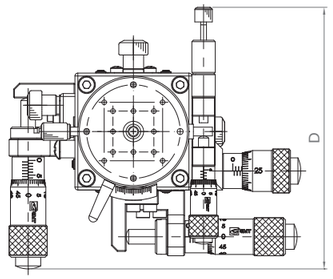

Top viewing

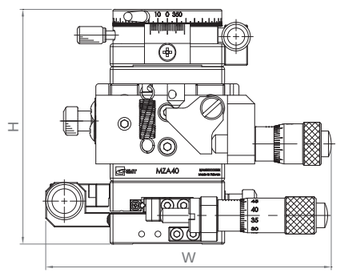

Front side viewing

Model no.	Multiple axes			Table size (mm)	Outline dimensions (mm)			Travel stroke (mm)				Allowable loading (kgf)	Weight (kg)
規格編碼	Base	Middle	Top		W	D	H	X	Y	Z	θ		
MXYWZAR38–A	MYW40–AS	MZA–40	MR38–A	Ø38	99.75	89.5	82	±6.5	±6.5	±3.0	Coarse360° Fine±0.5°	0.7	0.57
MXYWZAR60–A	MYW60–AS	MZA–60	MR60–A	Ø60	121	109	102			±5.0		2.1	1.23
MXYWZAR85–A	MYW80–AS	MZA–80	MR85–A	Ø85	154.5	131	102	±12.5	±12.5			2.5	2.36

MXL30-AC

MXL30-AS

MYL30-AC

MYL30-AS

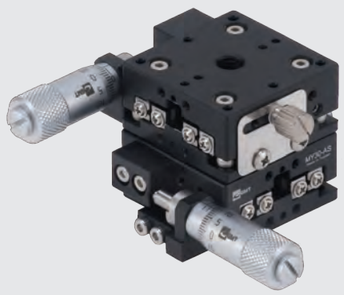

Specification

Unit: mm

Model no.	Table size	Axis	Feed position	Travel stroke	Micrometer minimum reading	Straightness accuracy	Allowable Loading (kgf)	Weight kg	Material	Surface finish
MXL30-AC	30*30	X axis	Central	±3.2	10μm	3μm	3	0.04	Aluminum alloy	Black anodized
MXL30-AS			Side							
MYL30-AC		XY-axis	Central					0.08		
MYL30-AS			Side							

MXL30-AC

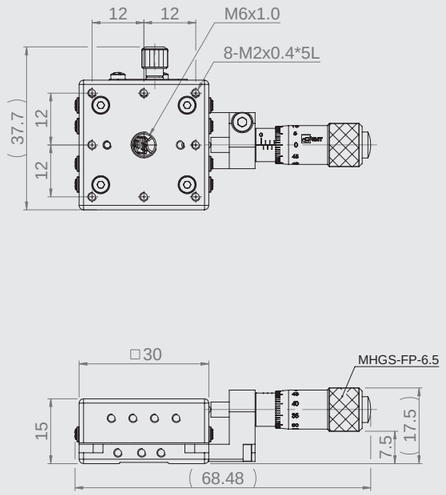

MXL30-AS

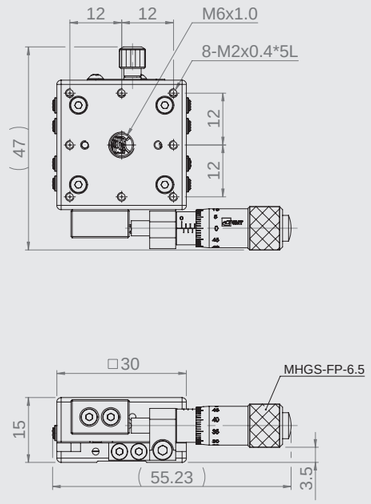

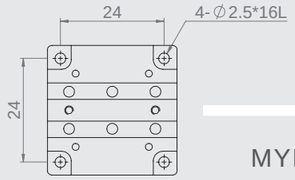

MX(Y)L30-A
Mounting dimensions

MYL30-AC

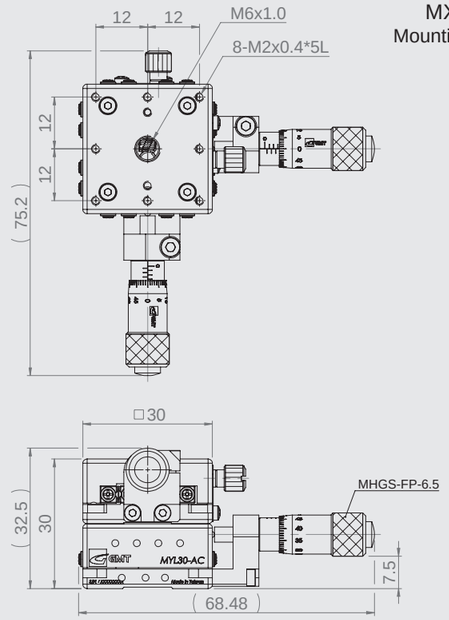

MYL30-AS

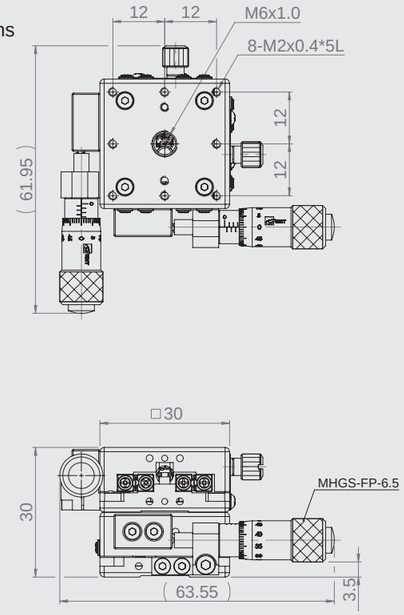

MXL40-AC

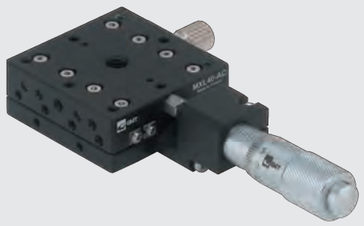

MXL40-AS

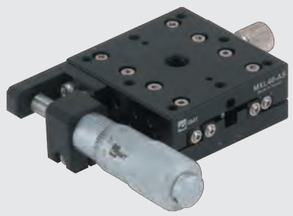

MYL40-AC

MYL40-AS

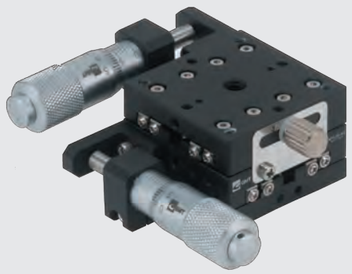

Specification

Unit: mm

Model no.	Table size	Axis	Feed position	Travel stroke	Micrometer minimum reading	Straightness accuracy	Allowable Loading (kgf)	Weight kg	Material	Surface finish
MXL40-AC	40*40	X axis	Central	±6.5	10μm	3μm	3	0.13	Aluminum alloy	Black anodized
MXL40-AS			Side							
MYL40-AC		XY-axis	Central					0.23		
MYL40-AS			Side							

MXL40-AC

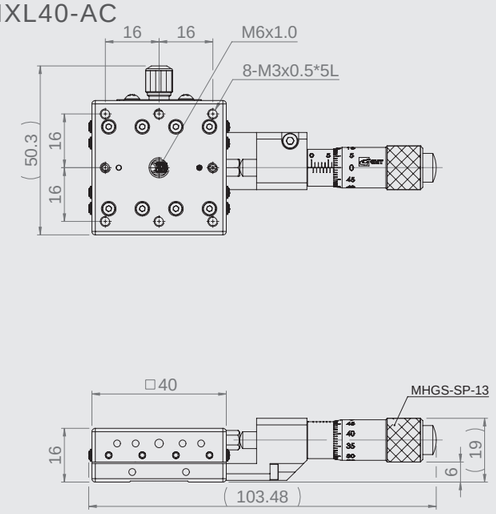

MXL40-AS

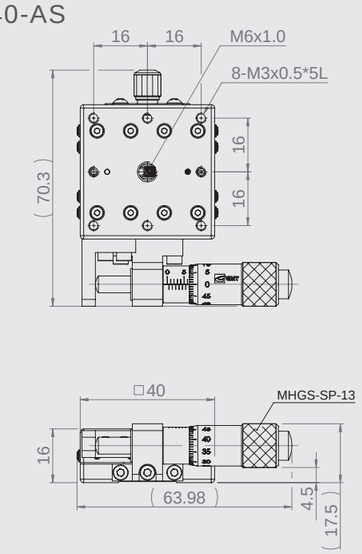

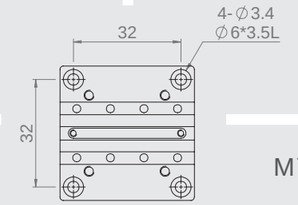

MX(Y)L40-A
Mounting dimensions

MYL40-AC

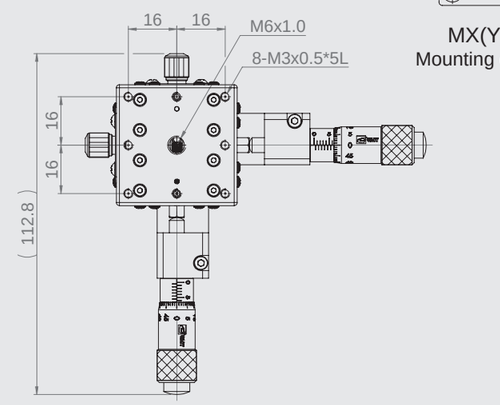

MYL40-AS

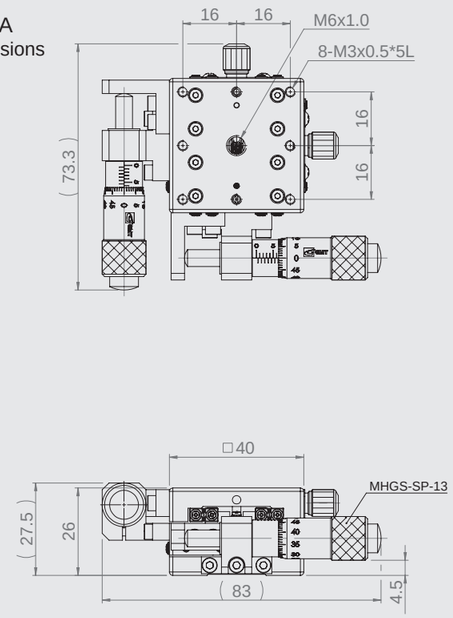

MXL60-AC

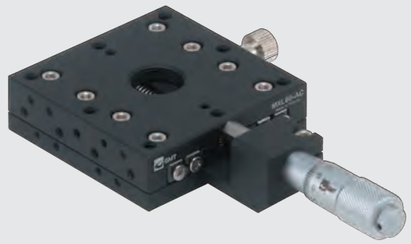

MXL60-AS

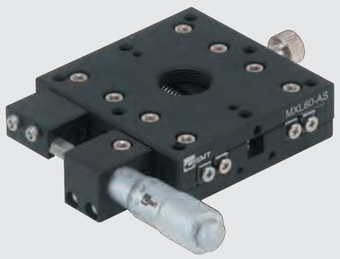

MYL60-AC

MYL60-AS

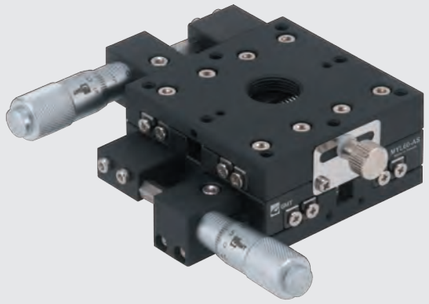

Specification

Unit: mm

Model no.	Table size	Axis	Feed position	Travel stroke	Micrometer minimum reading	Straightness accuracy	Allowable Loading (kgf)	Weight kg	Material	Surface finish
MXL60-AC	60*60	X axis	Central	±6.5	10μm	3μm	5	0.3	Aluminum alloy	Black anodized
MXL60-AS			Side							
MYL60-AC		XY-axis	Central					0.5		
MYL60-AS			Side							

MXL60-AC

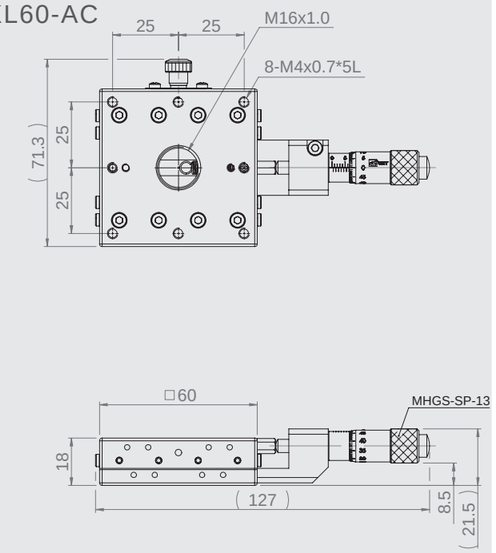

MXL60-AS

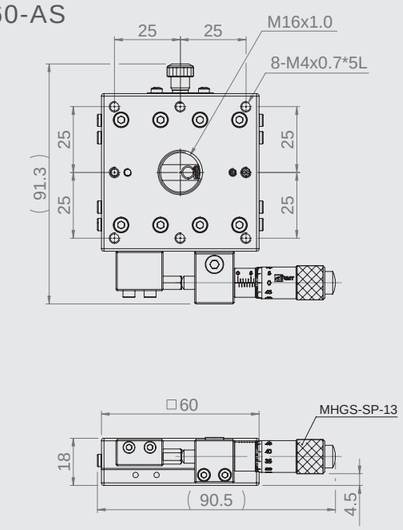

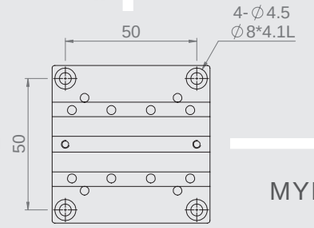

MX(Y)L60-A
Mounting dimensions

MYL60-AC

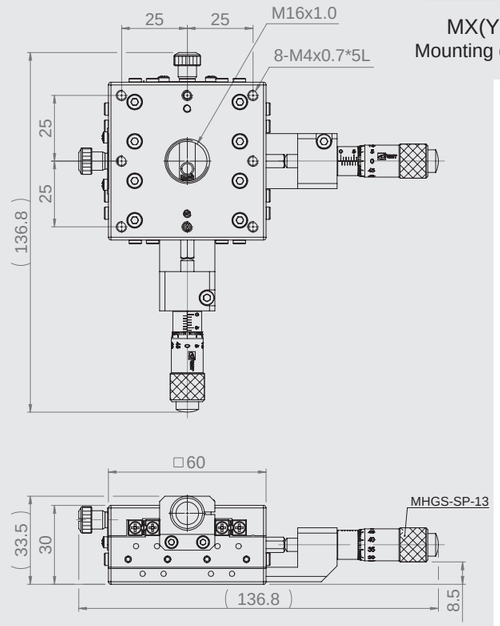

MYL60-AS

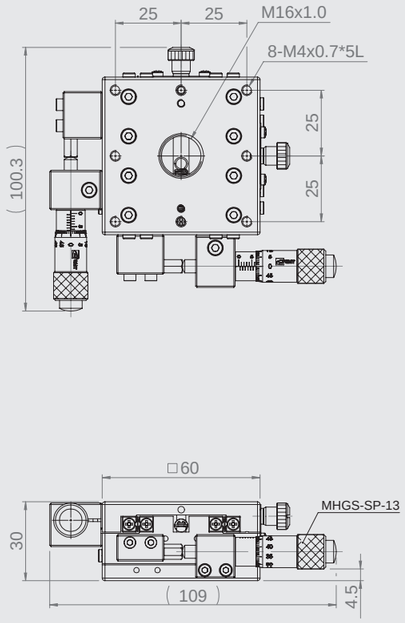

MXL90-AC

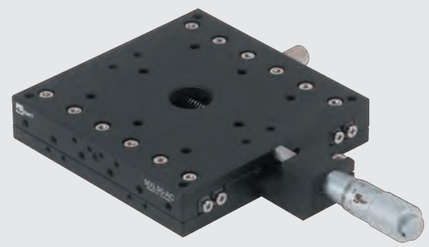

MXL90-AS

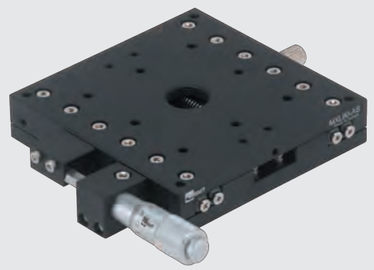

MYL90-AC

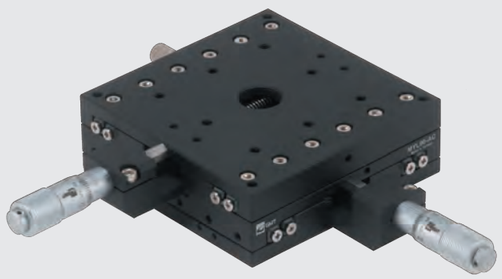

MYL90-AS

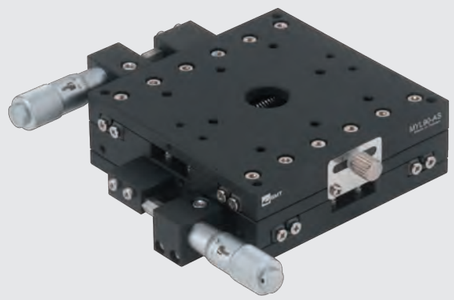

Specification

Unit: mm

Model no.	Table size	Axis	Feed position	Travel stroke	Micrometer minimum reading	Straightness accuracy	Allowable Loading (kgf)	Weight kg	Material	Surface finish
MXL90-AC	90*90	X axis	Central	±7.5	10μm	3μm	8	0.45	Aluminum alloy	Black anodized
MXL90-AS			Side							
MYL90-AC		XY-axis	Central					0.85		
MYL90-AS			Side							

MXL90-AC

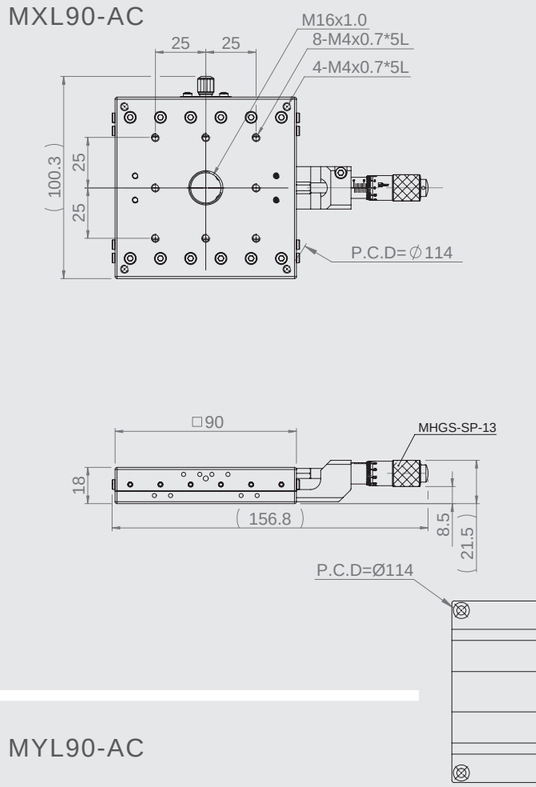

MXL90-AS

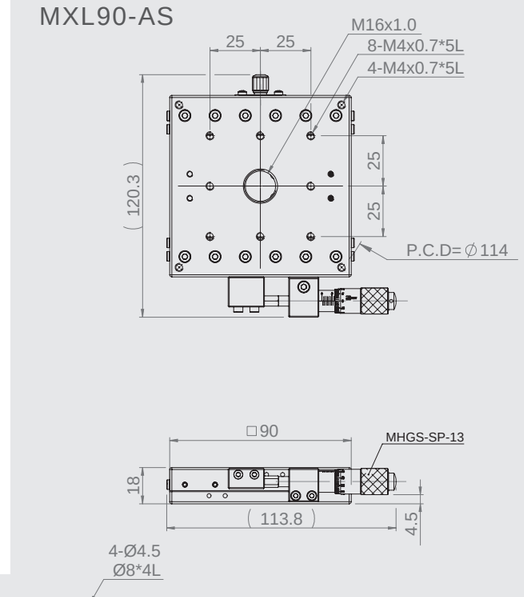

MX(Y)L90-A
Mounting dimensions

MYL90-AC

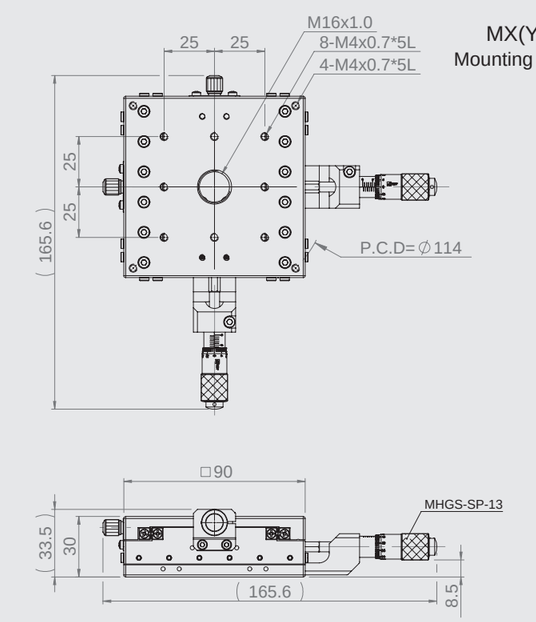

MYL90-AS

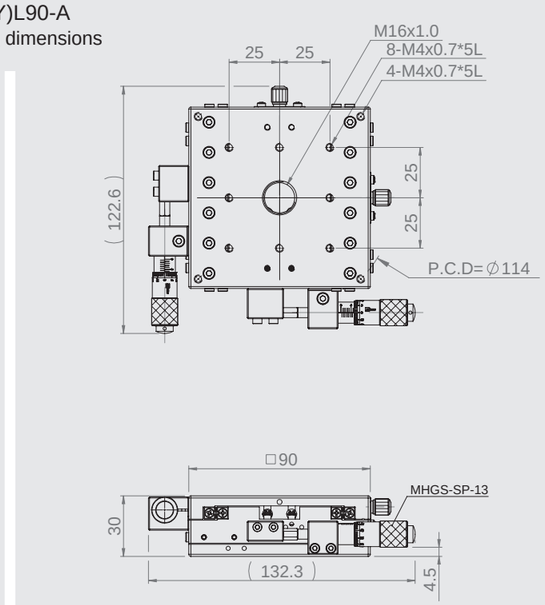

MXL125-AC

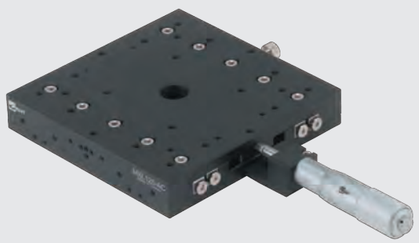

MXL125-AS

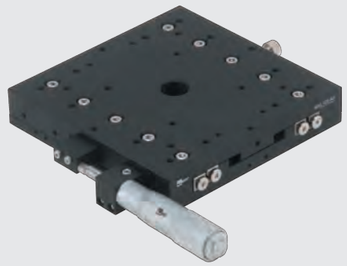

MYL125-AC

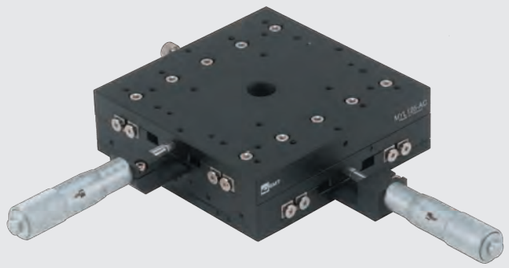

MYL125-AS

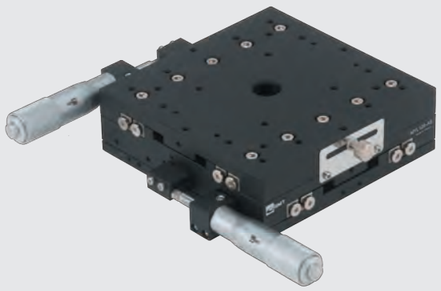

Specification

Unit: mm

Model no.	Table size	Axis	Feed position	Travel stroke	Micrometer minimum reading	Straightness accuracy	Allowable Loading (kgf)	Weight kg	Material	Surface finish
MXL125-AC	125*125	X axis	Central	±12.5	10μm	3μm	15	1.1	Aluminum alloy	Black anodized
MXL125-AS			Side							
MYL125-AC		XY-axis	Central					2		
MYL125-AS			Side							

MXL125-AC

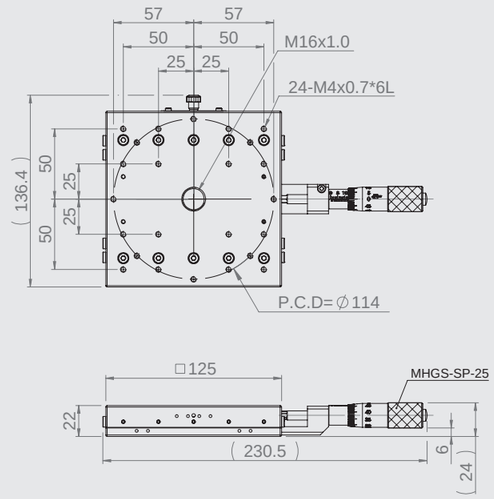

MXL125-AS

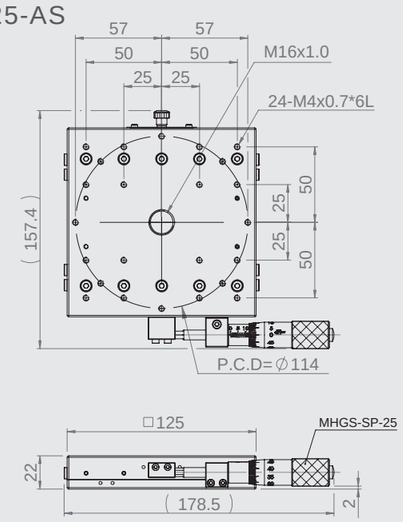

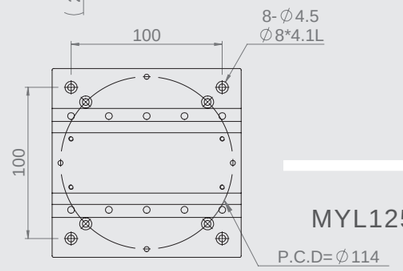

MX(Y)L125-A
Mounting dimensions

MYL125-AC

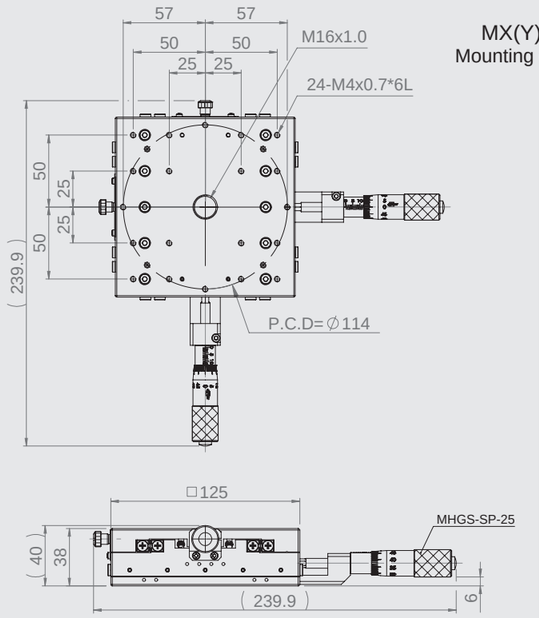

MYL125-AS

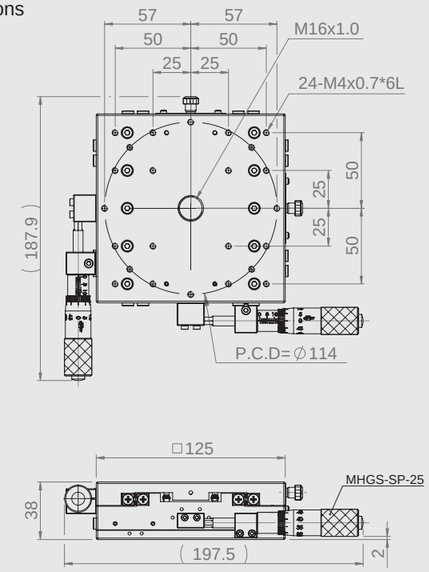

MLZ30-ASZ

MLZ40-ASZ

MLZ60-ASZ

MLZ90-ASZ

Specification

Unit: mm

Model no.	Table size	Axis	Feed position	Travel stroke	Micrometer minimum reading	Straightness accuracy	Allowable Loading (kgf)	Weight kg	Material	Surface finish
MLZ30-ASZ	30*30	X+L 托架	Side	±3.2	10 μm	3 μm	1.5	0.1	Aluminum alloy	Black anodized
MLZ40-ASZ	40*40			±6.5			1.5	0.21		
MLZ60-ASZ	60*60						2	0.52		
MLZ90-ASZ	90*90			±7.5			3	0.91		

MLZ30-ASZ

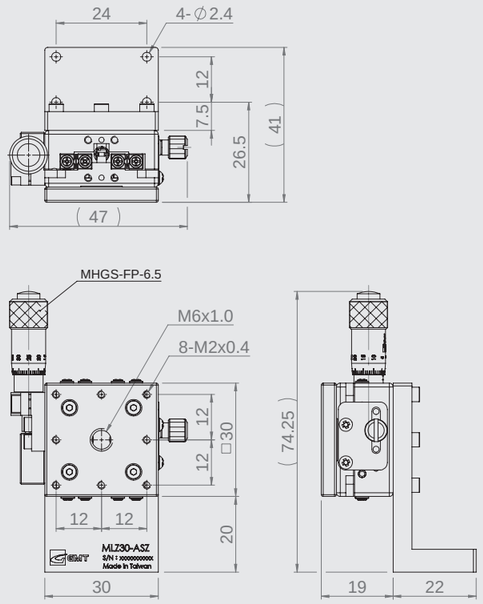

MLZ40-ASZ

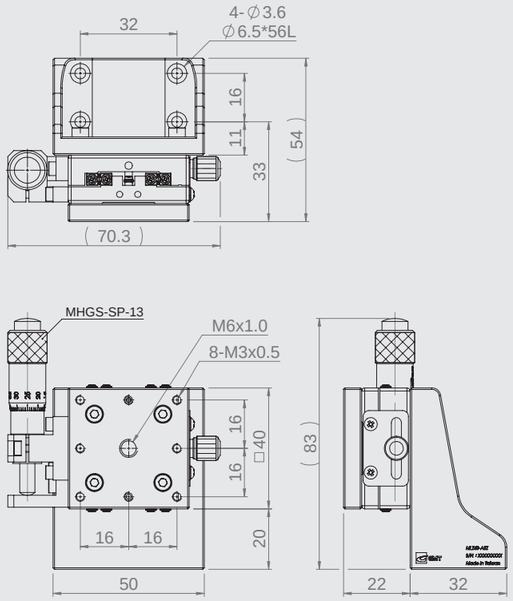

MLZ60-ASZ

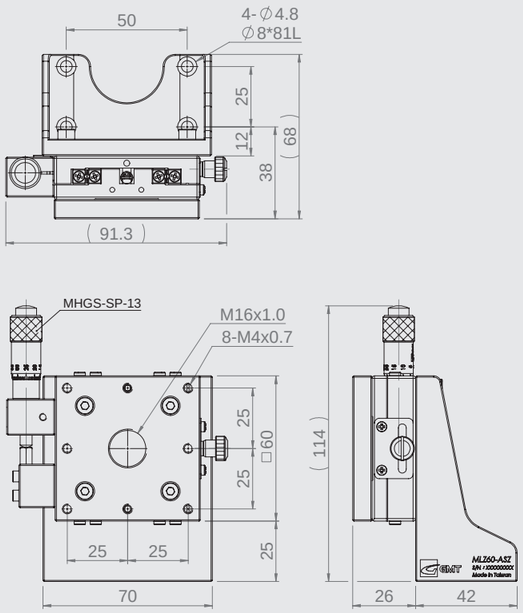

MLZ90-ASZ

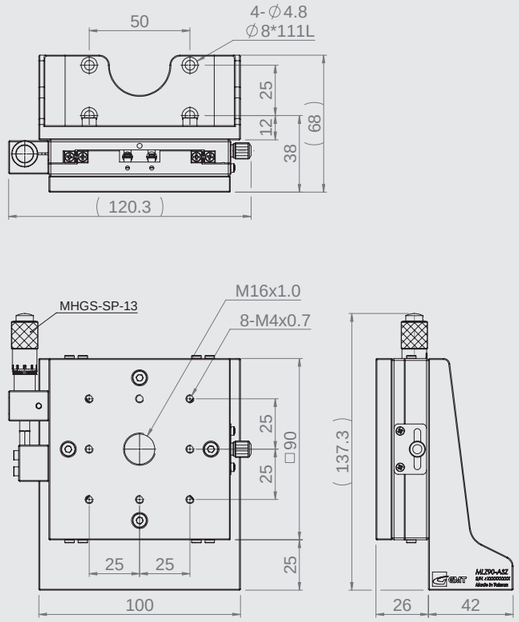

MYW40-AS

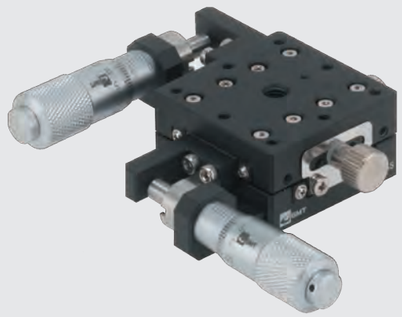

MYW60-AS

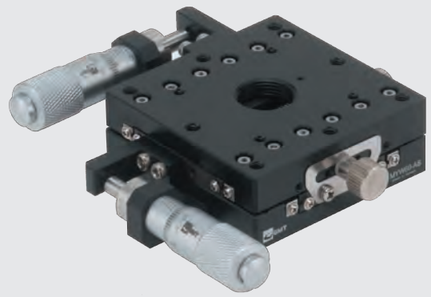

MYW80-AS

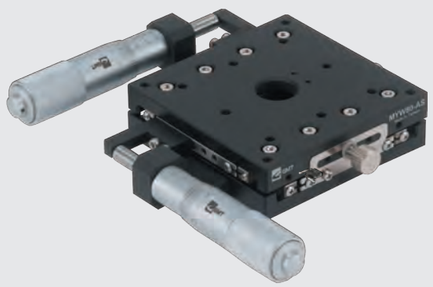

MYW100-AS

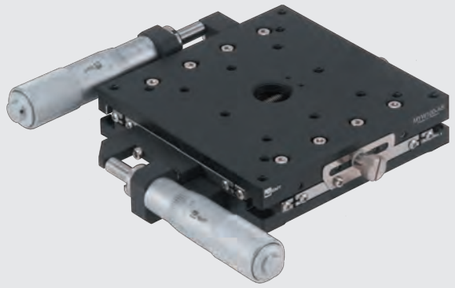

Specification

Unit: mm

Model no.	Table size	Axis	Feed position	Travel stroke	Micrometer minimum reading	Straightness accuracy	Allowable Loading (kgf)	Weight kg	Material	Surface finish
MYW40-AS	40*40	XY-axis	Side	±6.5	10μm	3μm	1	0.2	Aluminum alloy	Black anodized
MYW60-AS	60*60						3	0.4		
MYW80-AS	80*80			±12.5			4	0.7		
MYW100-AS	100*100							1.1		

MYW40-AS

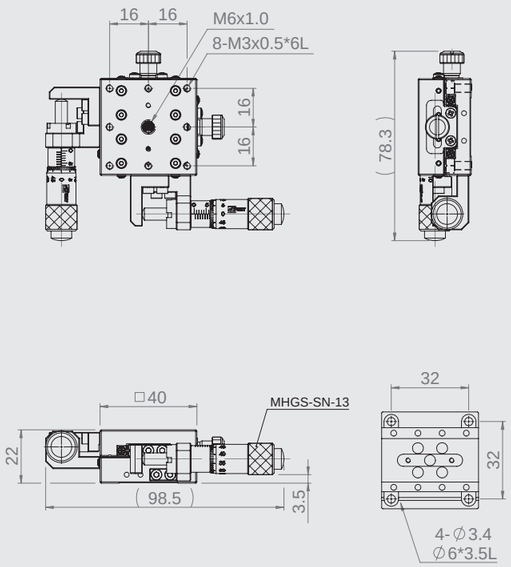

MYW60-AS

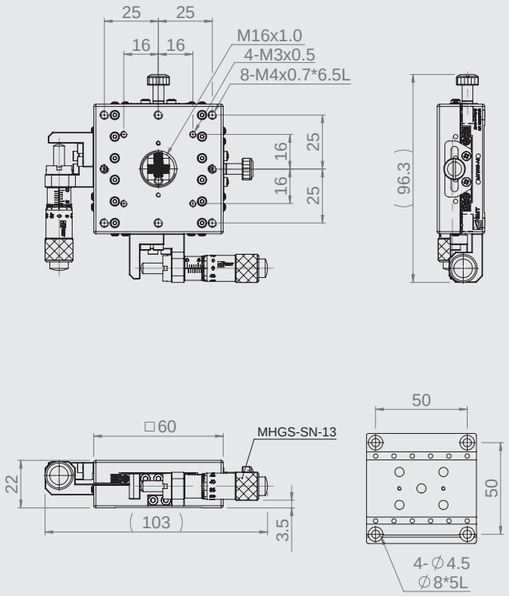

MYW80-AS

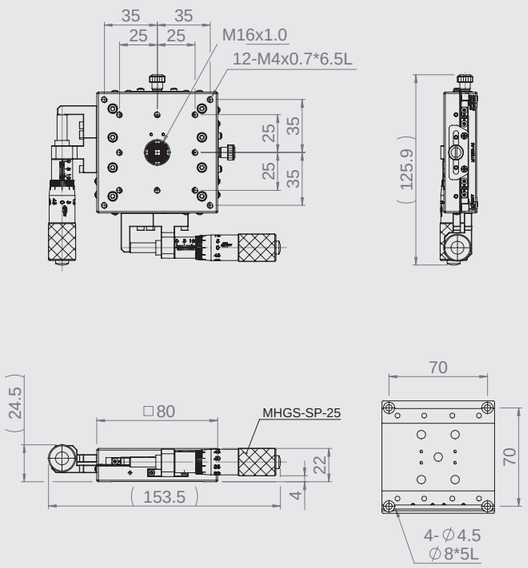

MYW100-AS

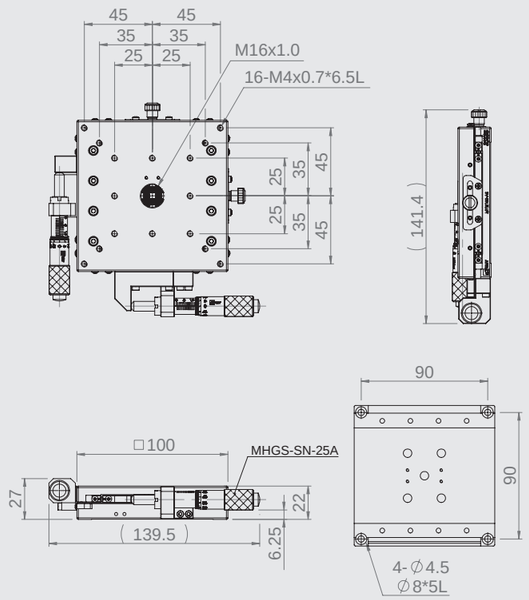

MYW40-AC

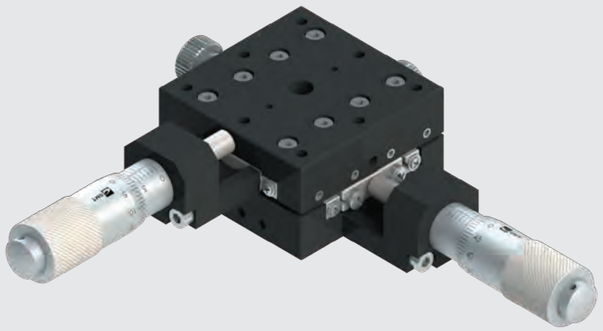

MYW60-AC

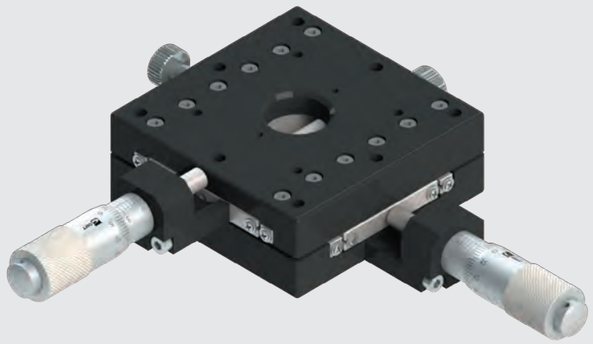

Specification

Unit: mm

Model no.	Table size	Axis	Feed position	Travel stroke	Micrometer minimum reading	Straightness accuracy	Allowable Loading (kgf)	Weight kg	Material	Surface finish
MYW40-AC	40*40	XY-axis	Central	±6.5	10 μm	3 μm	1	0.2	Aluminum alloy	Black anodized
MYW60-AC	60*60							0.4		

Crossed roller stages ▶ XY-axis ▶ Aluminum alloy - Super Thin type
Crossed roller Thin type stages | XY-axis
GMT GLOBAL INC.
Crossed roller Thin type stages
XY-axis

MYW40-AC

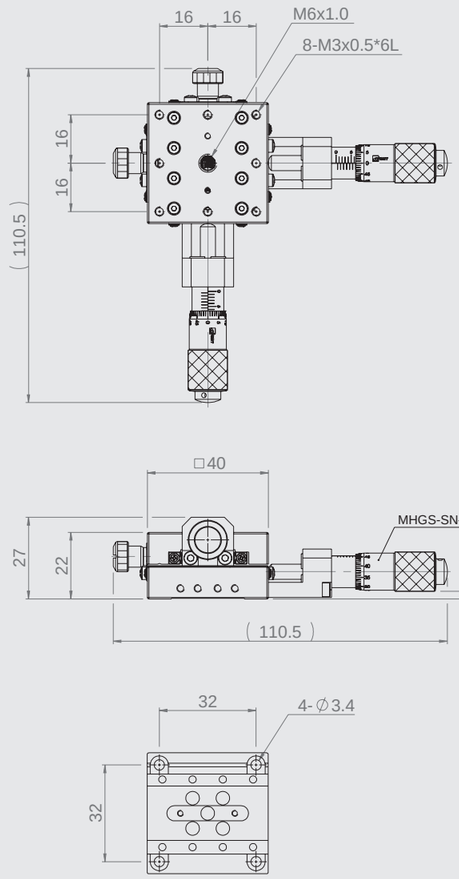

MYW60-AC

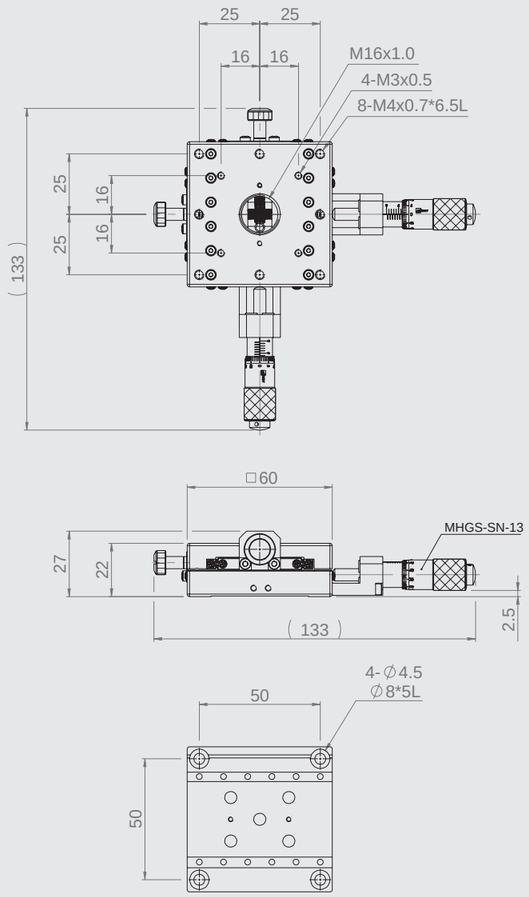

MX25-AC-18

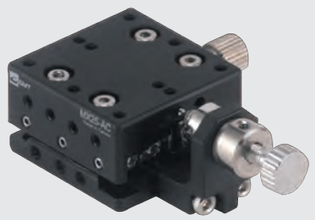

MX25-AS-18

MY25-AC-18

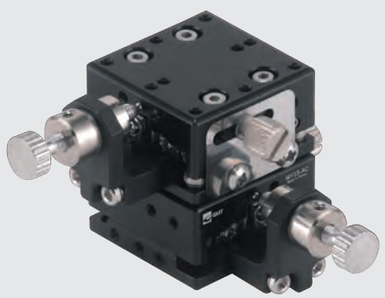

MY25-AS-18

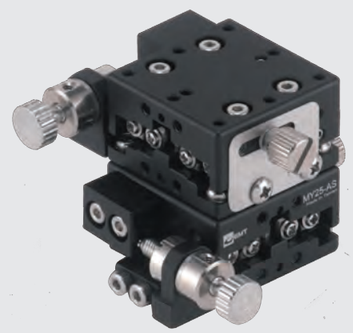

Specification

Unit: mm

Model no.	Table size	Axis	Feed position	Travel stroke	Movement per knob rotation	Straightness accuracy	Allowable Loading (kgf)	Weight kg	Material	Surface finish
MX25-AC-18	25*25	X axis	Central	±3.2	5 μm	3μm	1	0.04	Aluminum alloy	Black anodized
MX25-AS-18			Side							
MY25-AC-18		XY-axis	Central					0.08		
MY25-AS-18			Side							

MX25-AC-18

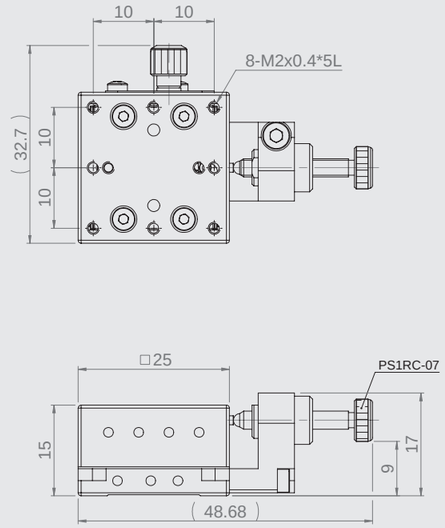

MX25-AS-18

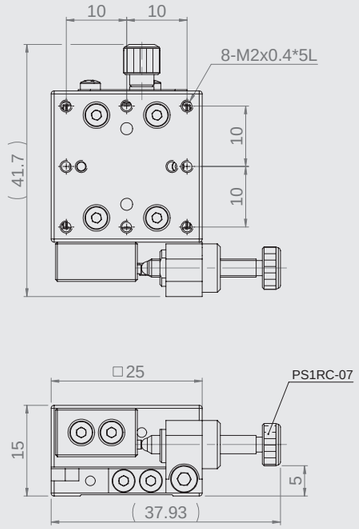

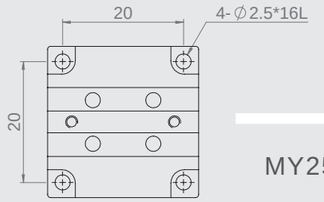

MX(Y)25-A-18
Mounting dimensions

MY25-AC-18

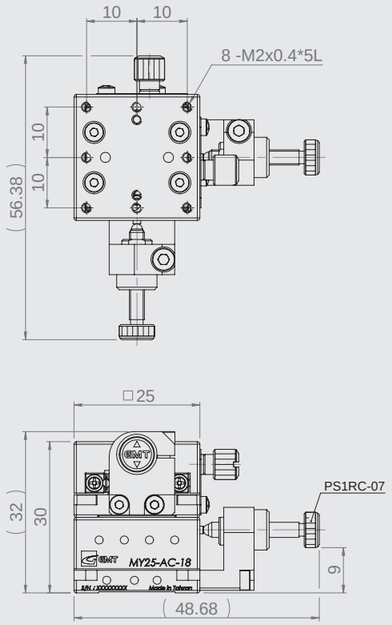

MY25-AS-18

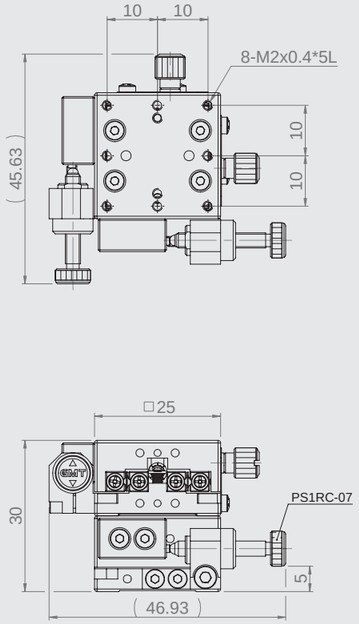

MX30-AC-18

MX30-AS-18

MY30-AC-18

MY30-AS-18

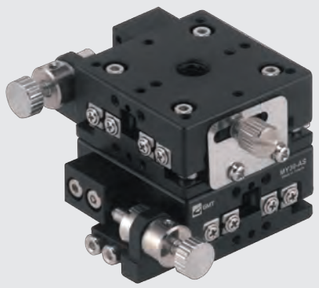

Specification

Unit: mm

Model no.	Table size	Axis	Feed position	Travel stroke	Movement per knob rotation	Straightness accuracy	Allowable Loading (kgf)	Weight kg	Material	Surface finish
MX30-AC-18	30*30	X axis	Central	±3.2	5 μm	3μm	1	0.045	Aluminum alloy	Black anodized
MX30-AS-18			Side							
MY30-AC-18		XY-axis	Central					0.09		
MY30-AS-18			Side							

MX30-AC-18

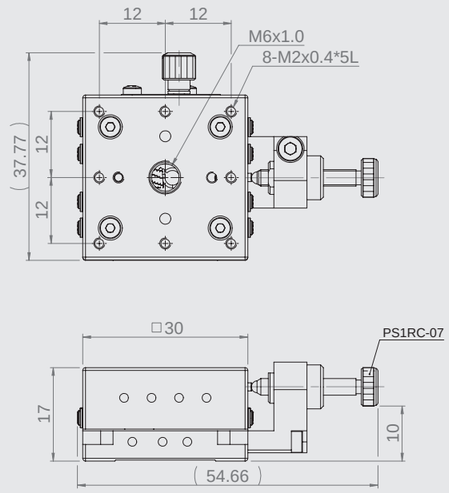

MX30-AS-18

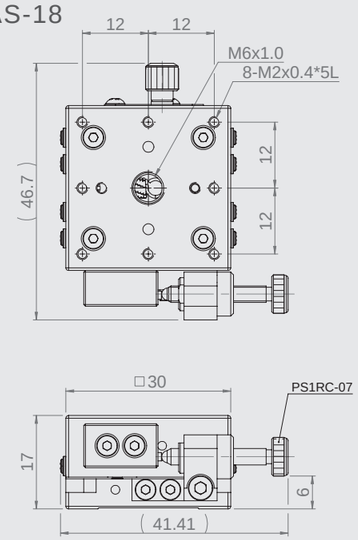

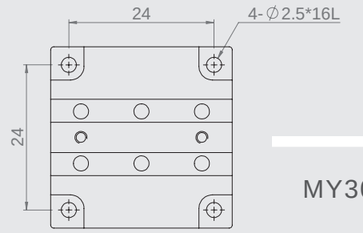

MX(Y)30-A-18
Mounting dimensions

MY30-AC-18

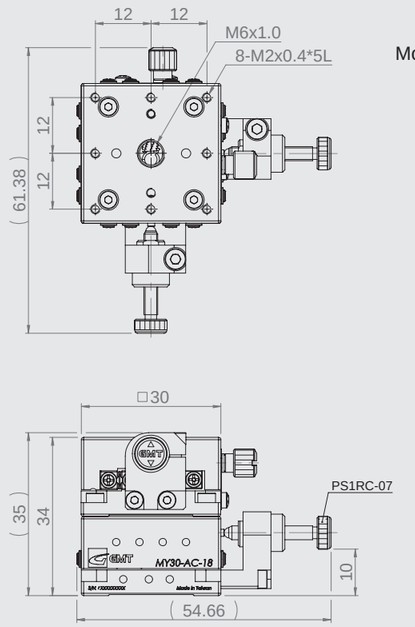

MY30-AS-18

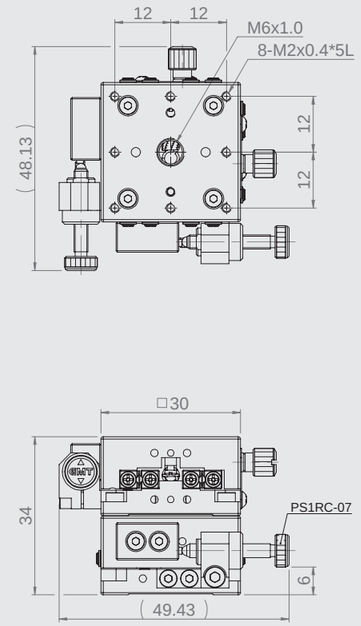

MX40-AC-18

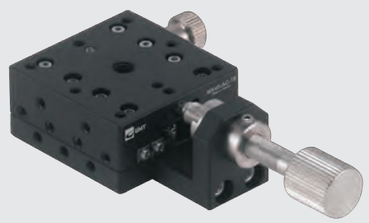

MX40-AS-18

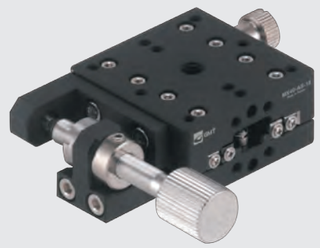

MY40-AC-18

MY40-AS-18

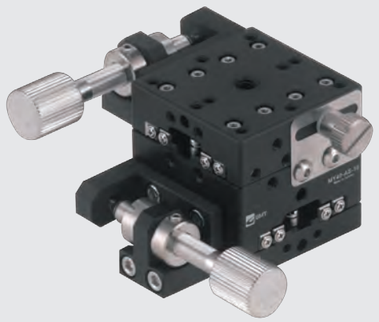

Specification

Unit: mm

Model no.	Table size	Axis	Feed position	Travel stroke	Movement per knob rotation	Straightness accuracy	Allowable Loading (kgf)	Weight kg	Material	Surface finish
MX40-AC-18	40*40	X axis	Central	±6.5	5 μm	3μm	2.0	0.14	Aluminum alloy	Black anodized
MX40-AS-18			Side							
MY40-AC-18		XY-axis	Central				1.8	0.30		
MY40-AS-18			Side							

Crossed roller stages (Feeding screw design) ▶ X axis and XY-axis ▶ Aluminum alloy
Crossed roller stages (Feeding screw design) | 40*40
GMT GLOBAL INC.
Crossed roller stages (Feeding screw design)
40*40

MX40-AC-18

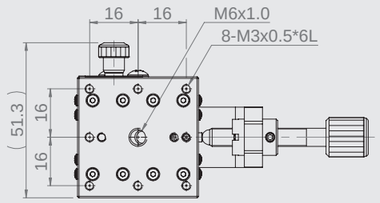

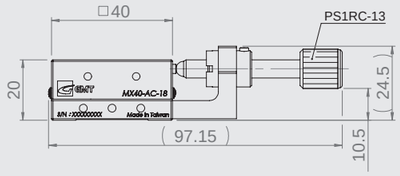

MX40-AS-18

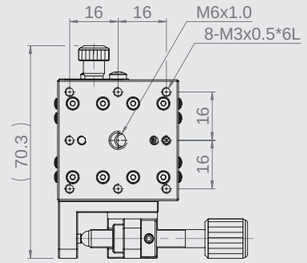

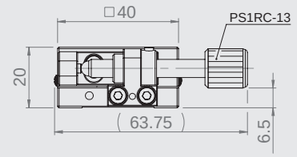

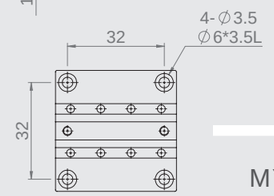

MX(Y)40-A-18
Mounting dimensions

MY40-AC-18

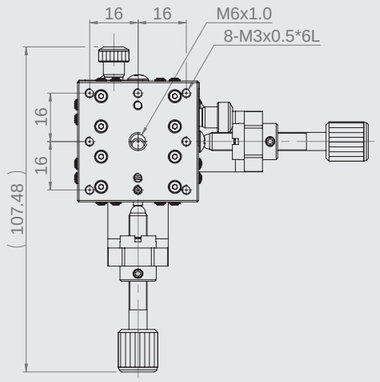

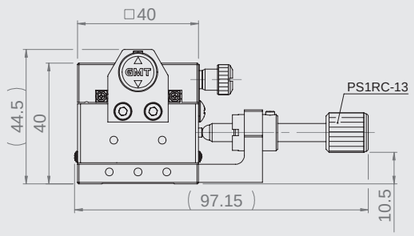

MY40-AS-18

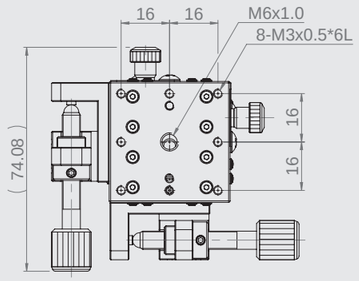

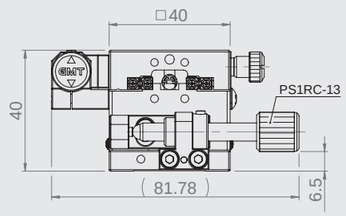

MX50-AC-18

MX50-AS-18

MY50-AC-18

MY50-AS-18

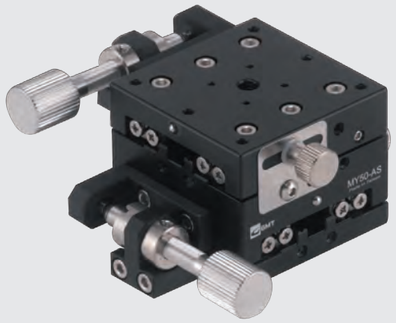

Specification

Unit: mm

Model no.	Table size	Axis	Feed position	Travel stroke	Movement per knob rotation	Straightness accuracy	Allowable Loading (kgf)	Weight kg	Material	Surface finish
MX50-AC-18	50*50	X axis	Central	±6.5	5 μm	3μm	4	0.22	Aluminum alloy	Black anodized
MX50-AS-18			Side							
MY50-AC-18		XY-axis	Central					0.44		
MY50-AS-18			Side							

MX50-AC-18

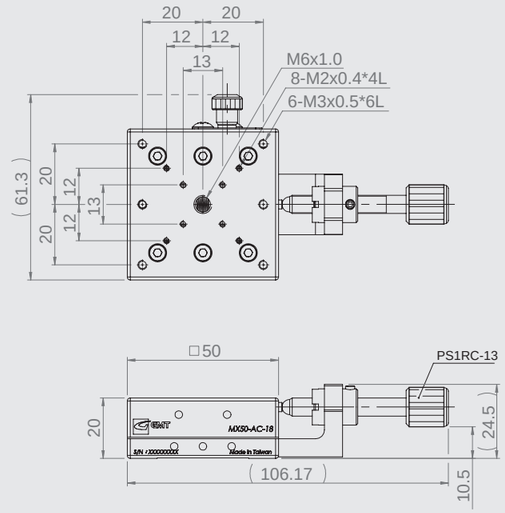

MX50-AS-18

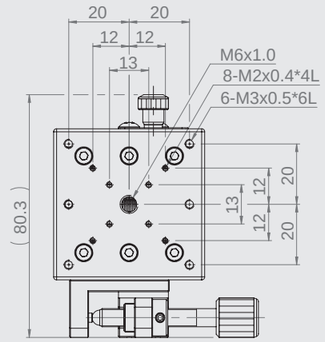

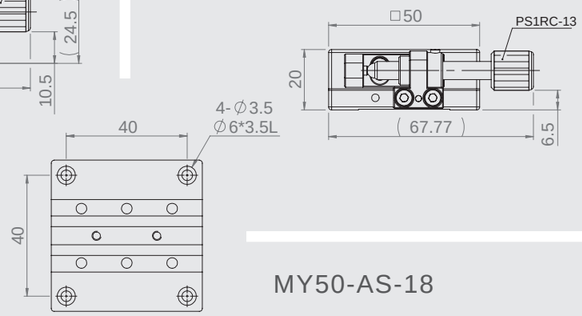

MX(Y)50-A-18
Mounting dimensions

MY50-AC-18

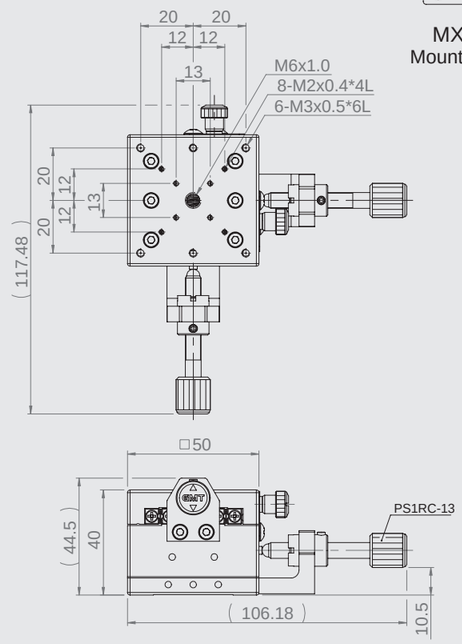

MY50-AS-18

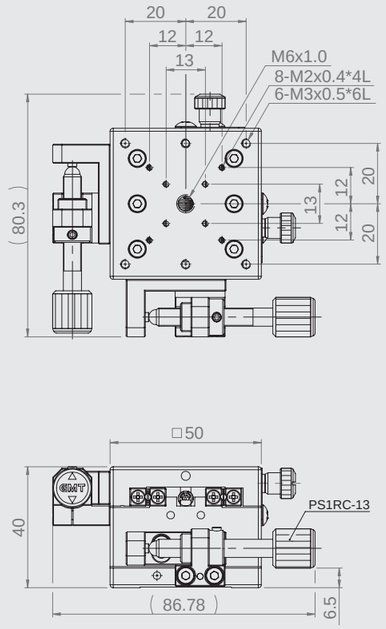

MX60-AC-18

MX60-AS-18

MY60-AC-18

MY60-AS-18

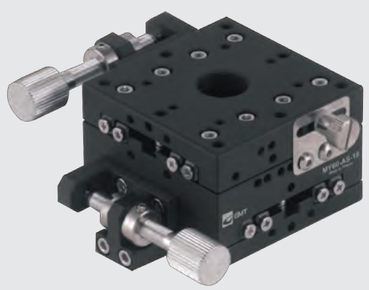

Specification

Unit: mm

Model no.	Table size	Axis	Feed position	Travel stroke	Movement per knob rotation	Straightness accuracy	Allowable Loading (kgf)	Weight kg	Material	Surface finish
MX60-AC-18	60*60	X axis	Central	±6.5	5 μm	3μm	5.0	0.25	Aluminum alloy	Black anodized
MX60-AS-18			Side							
MY60-AC-18		XY-axis	Central				4.5	0.52		
MY60-AS-18			Side							

Crossed roller stages (Feeding screw design) ▶ X axis and XY-axis ▶ Aluminum alloy
Crossed roller stages (Feeding screw design) | 60*60
GMT GLOBAL INC.

MX60-AC-18

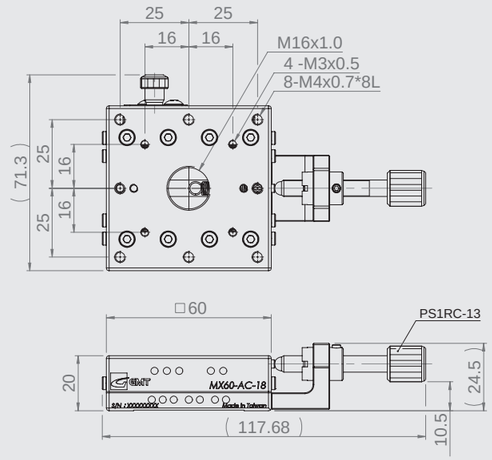

MX60-AS-18

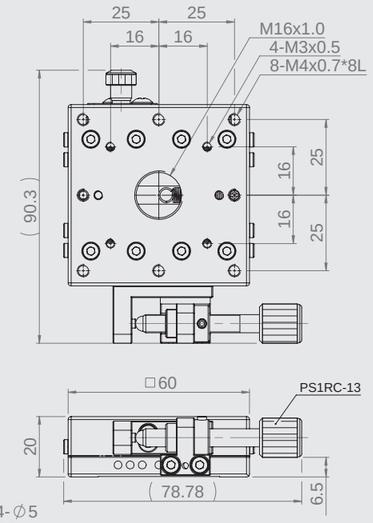

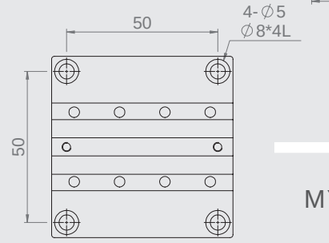

MX(Y)60-A-18
Mounting dimensions

MY60-AC-18

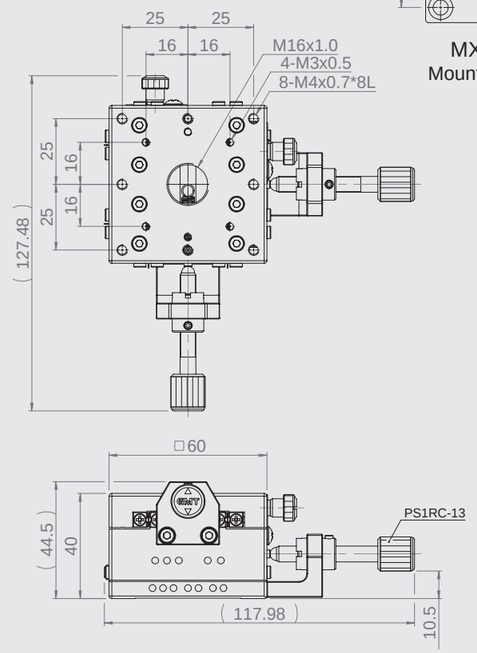

MY60-AS-18

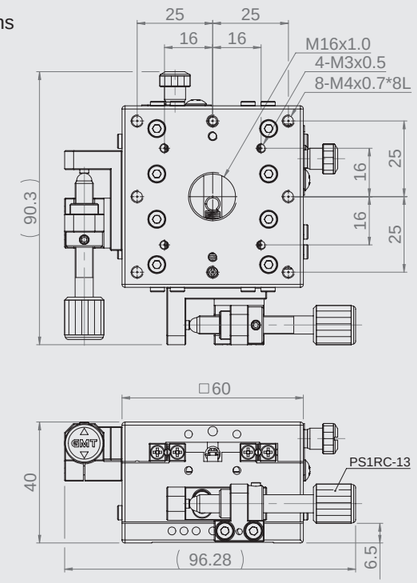

MX70-AC-18

MX70-AS-18

MY70-AC-18

MY70-AS-18

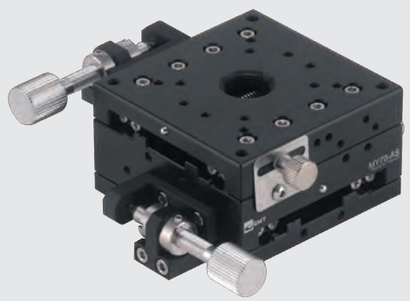

Specification

Unit: mm

Model no.	Table size	Axis	Feed position	Travel stroke	Movement per knob rotation	Straightness accuracy	Allowable Loading (kgf)	Weight kg	Material	Surface finish
MX70-AC-18	70*70	X axis	Central	±6.5	5 μm	3μm	6	0.44	Aluminum alloy	Black anodized
MX70-AS-18			Side							
MY70-AC-18		XY-axis	Central					0.88		
MY70-AS-18			Side							

Crossed roller stages (Feeding screw design) ▶ X axis and XY-axis ▶ Aluminum alloy
Crossed roller stages (Feeding screw design) | 70*70
GMT GLOBAL INC.
Crossed roller stages (Feeding screw design)
70*70

MX70-AC-18

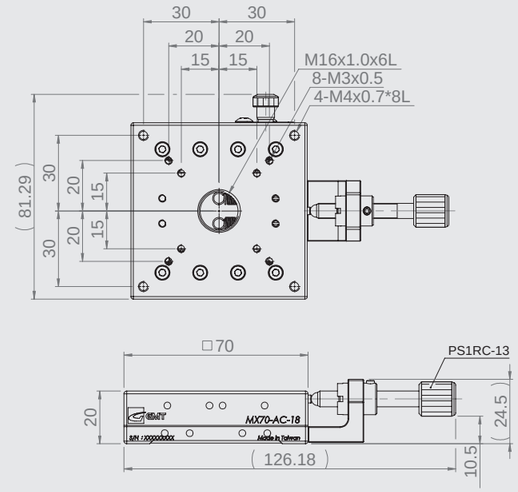

MX70-AS-18

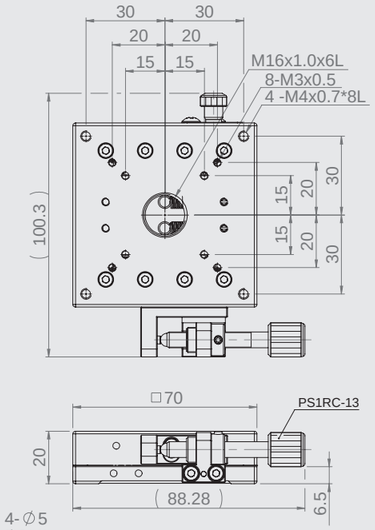

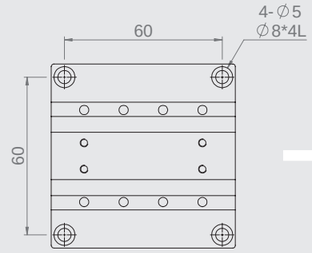

MX(Y)70-A-18
Mounting dimensions

MY70-AC-18

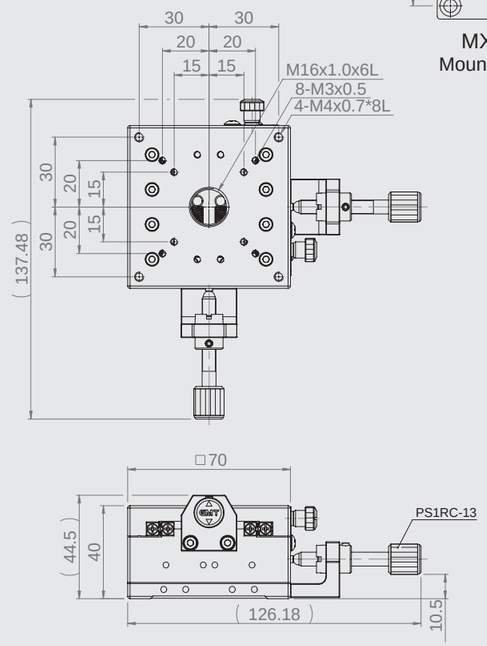

MY70-AS-18

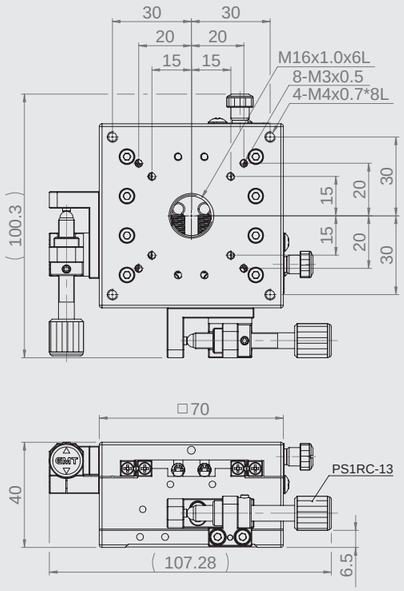

MX80-AC-18

MX80-AS-18

MY80-AC-18

MY80-AS-18

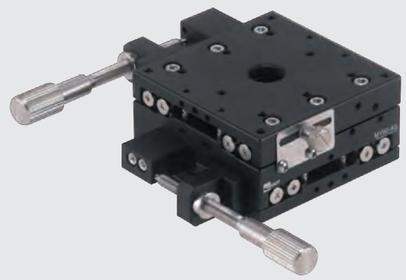

Specification

Unit: mm

Model no.	Table size	Axis	Feed position	Travel stroke	Movement per knob rotation	Straightness accuracy	Allowable Loading (kgf)	Weight kg	Material	Surface finish
MX80-AC-18	80*80	X axis	Central	±12.5	5 μm	3μm	10	0.5	Aluminum alloy	Black anodized
MX80-AS-18			Side							
MY80-AC-18		XY-axis	Central				9.5	1		
MY80-AS-18			Side							

MX80-AC-18

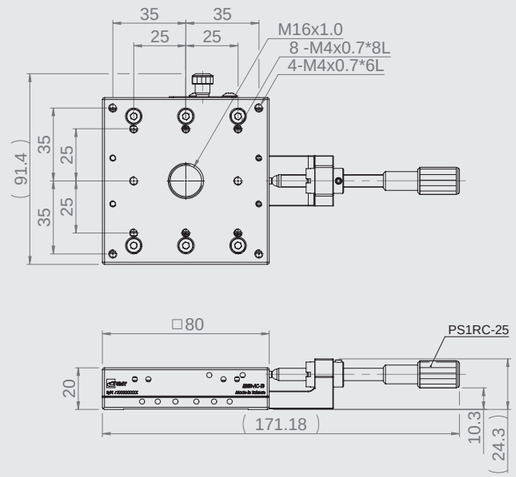

MX80-AS-18

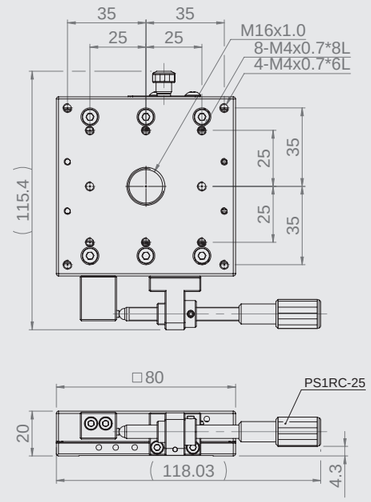

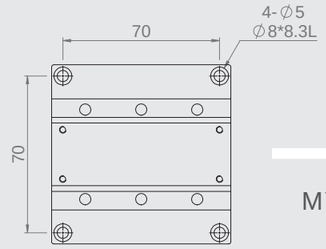

MX(Y)80-A-18
Mounting dimensions

MY80-AC-18

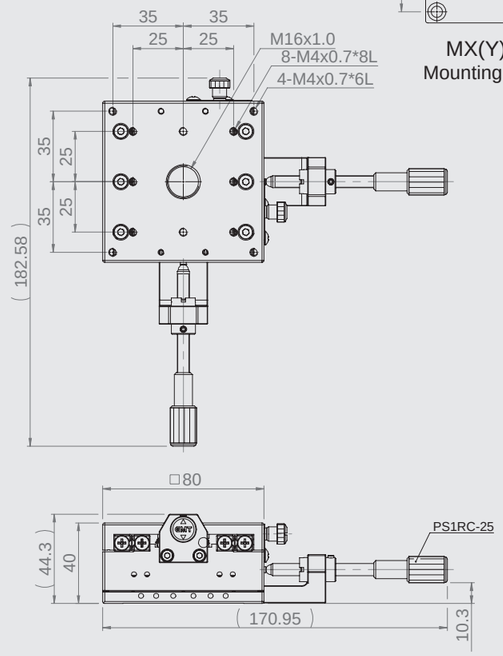

MY80-AS-18

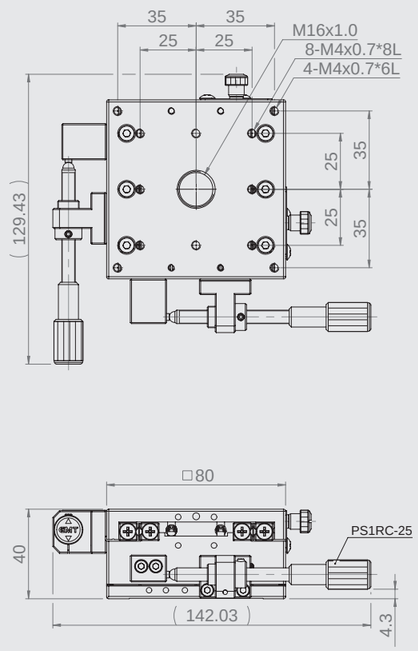

MX100-AC-18

MX100-AS-18

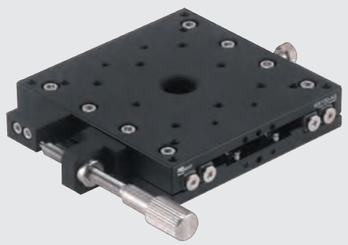

MY100-AC-18

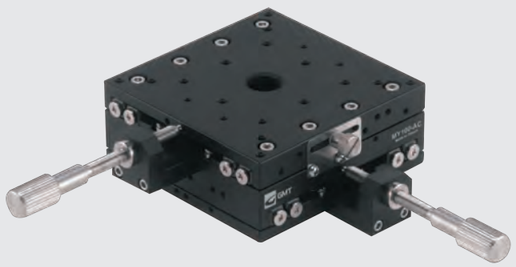

MY100-AS-18

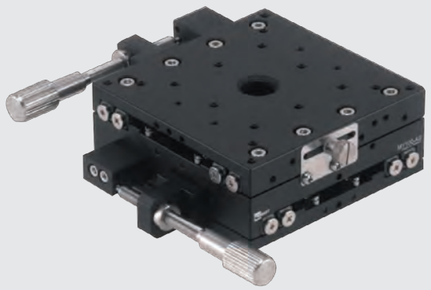

Specification

Unit: mm

Model no.	Table size	Axis	Feed position	Travel stroke	Movement per knob rotation	Straightness accuracy	Allowable Loading (kgf)	Weight kg	Material	Surface finish
MX100-AC-18	100*100	X axis	Central	±12.5	5 μm	3μm	15	0.7	Aluminum alloy	Black anodized
MX100-AS-18			Side							
MY100-AC-18		XY-axis	Central				14.3	1.4		
MY100-AS-18			Side							

Crossed roller stages (Feeding screw design) ▶ X axis and XY-axis ▶ Aluminum alloy
GMT GLOBAL INC.
Crossed roller stages (Feeding screw design) | 100*100

MX100-AC-18

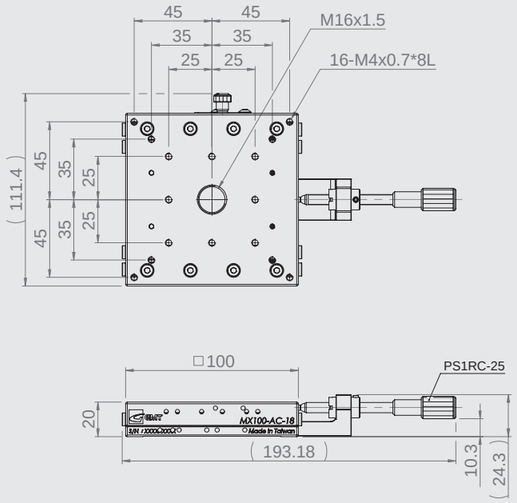

MX100-AS-18

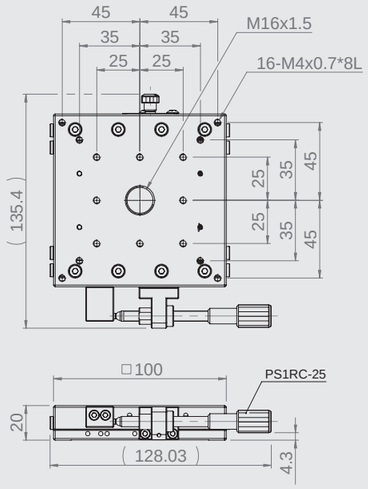

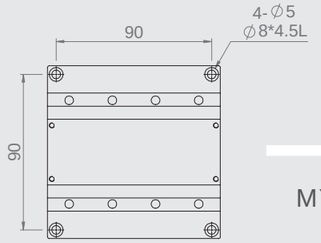

MX(Y)100-A-18
Mounting dimensions

MY100-AC-18

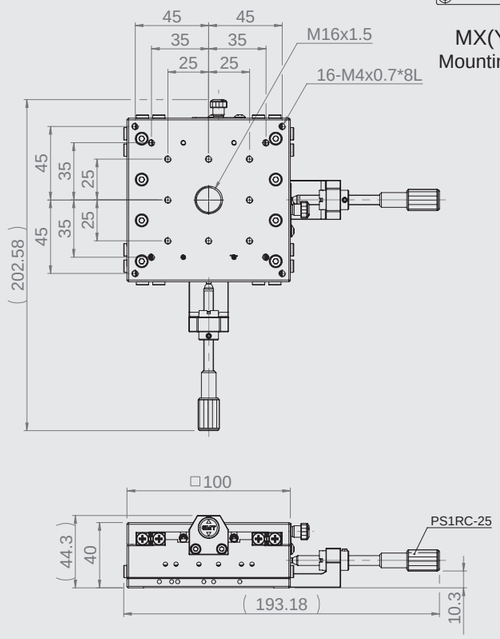

MY100-AS-18

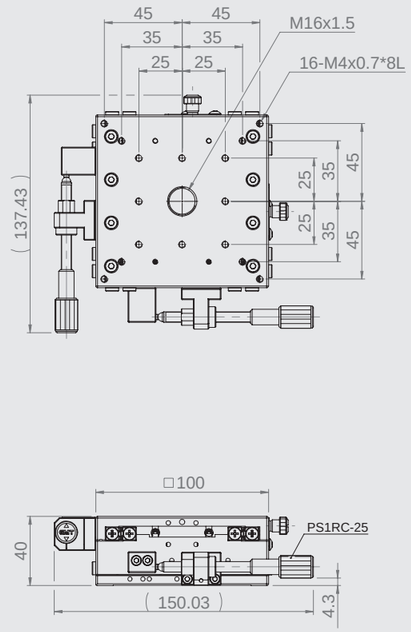

MX120-AC-18

MX120-AS-18

MY120-AC-18

MY120-AS-18

Specification

Unit: mm

Model no.	Table size	Axis	Feed position	Travel stroke	Movement per knob rotation	Straightness accuracy	Allowable Loading (kgf)	Weight kg	Material	Surface finish
MX120-AC-18	120*120	X axis	Central	±12.5	5 μm	3μm	20	1.6	Aluminum alloy	Black anodized
MX120-AS-18			Side							
MY120-AC-18		XY-axis	Central				18.4	3.2		
MY120-AS-18			Side							

Crossed roller stages (Feeding screw design) ▶ X axis and XY-axis ▶ Aluminum alloy
Crossed roller stages (Feeding screw design) | 120*120
GMT GLOBAL INC.

MX120-AC-18

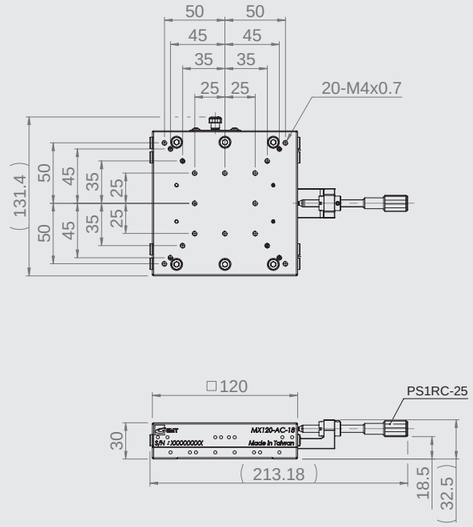

MX120-AS-18

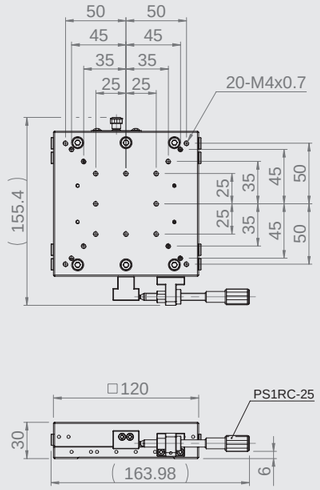

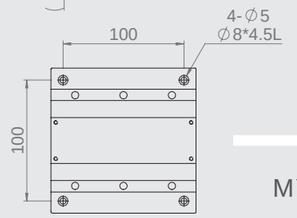

MX(Y)120-A-18
Mounting dimensions

MY120-AC-18

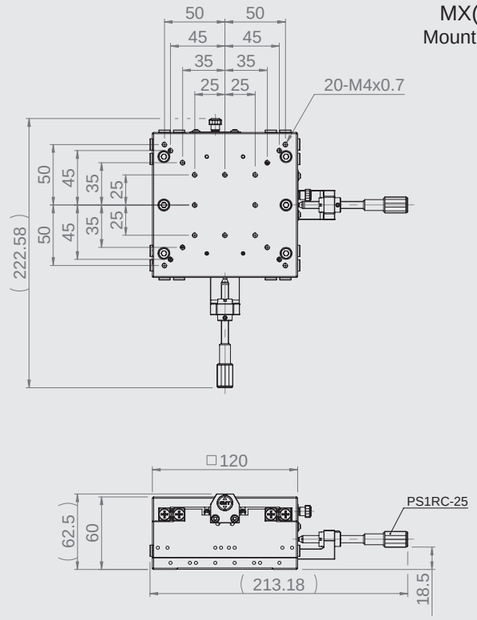

MY120-AS-18

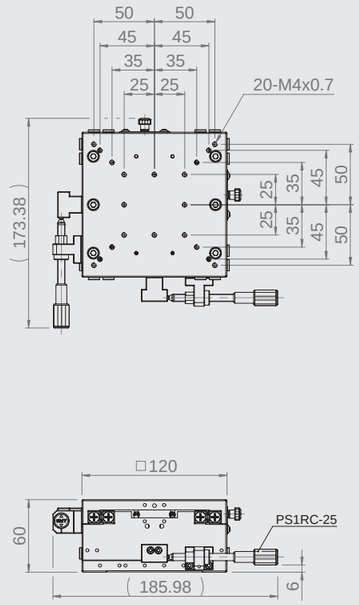

MX764-AC-SHR

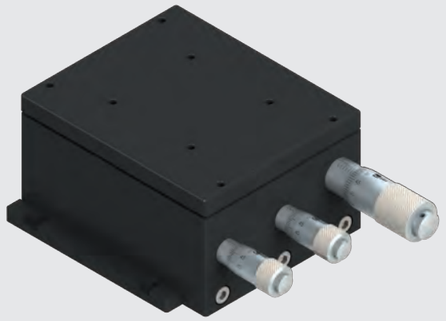

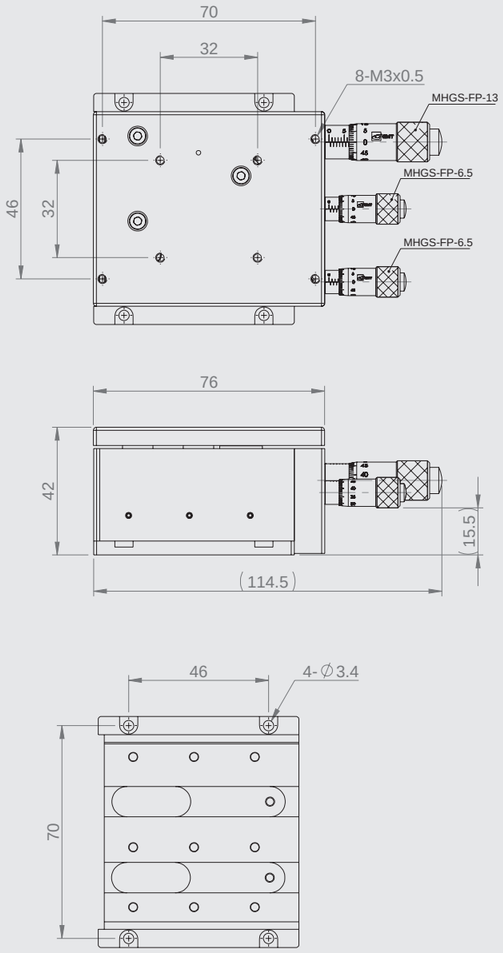

Specification

Unit: mm

Model no.	Table size	Axis	Travel stroke	Micrometer minimum reading	Straightness accuracy	Allowable Loading (kgf)	Weight kg	Material	Surface finish
MX764-AC-SHR	76*64	X axis	Coarse：≒±6.5	Coarse：1 μm	3 μm	1.5	0.6	Aluminum alloy	Black anodized
			Medium：≒±0.325	Medium：0.1 μm					
			Fine：≒±0.0325	Fine：0.01 μm					

MBZ20-AML

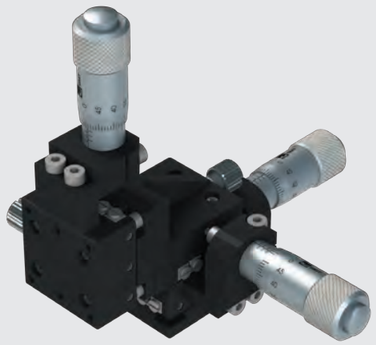

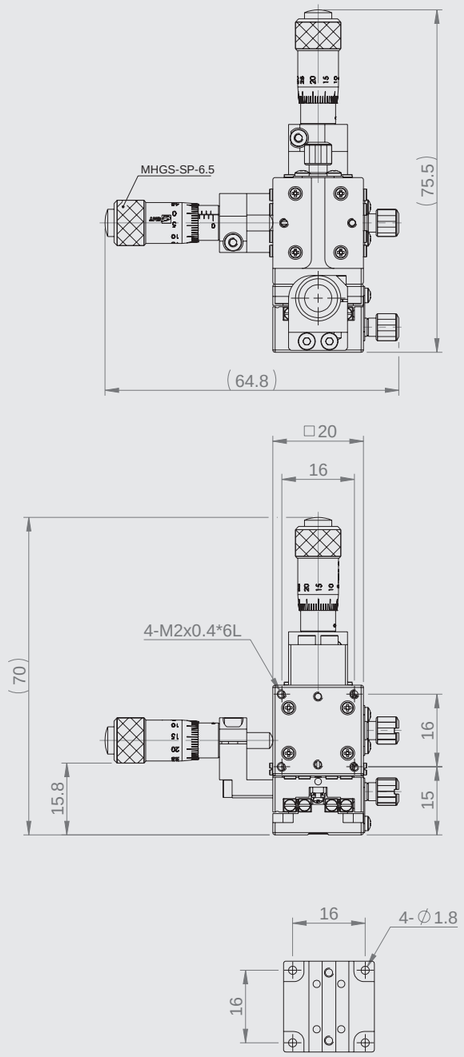

Specification

Unit: mm

Model no.	Table size	Axis	Travel stroke	Micrometer minimum reading	Straightness accuracy	Allowable Loading (kgf)	Weight kg	Material	Surface finish
MBZ20-AML(R)	20*20	XYZ-axis	±3	10 μm	3 μm	1	0.08	Aluminum alloy	Black anodized

MBZ30-AML

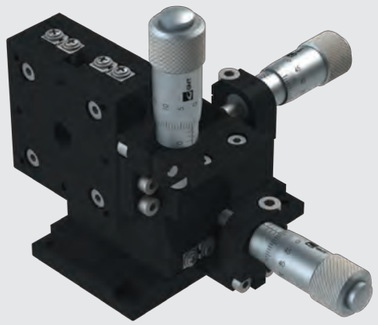

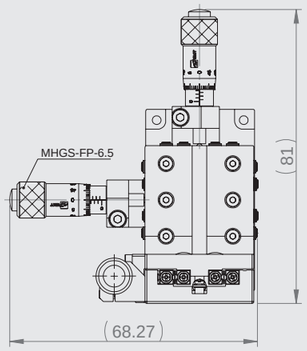

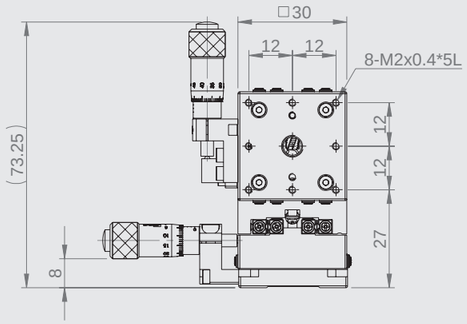

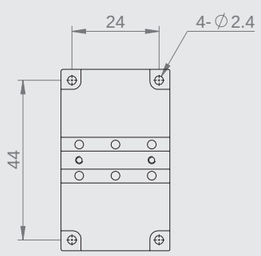

Specification

Unit: mm

Model no.	Table size	Axis	Travel stroke	Micrometer minimum reading	Straightness accuracy	Allowable Loading (kgf)	Weight kg	Material	Surface finish
MBZ30-AML(R)	30*30	XYZ-axis	±3.25	10 μm	3 μm	1.5	0.18	Aluminum alloy	Black anodized

MYCP40-A

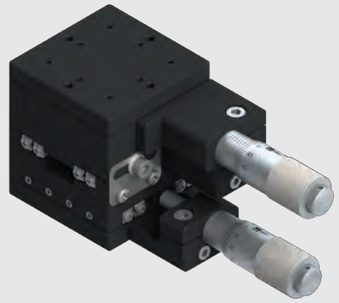

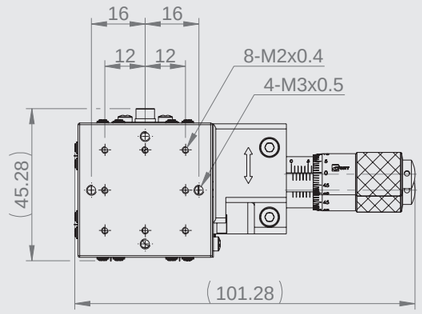

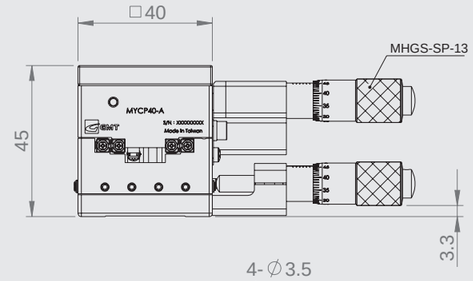

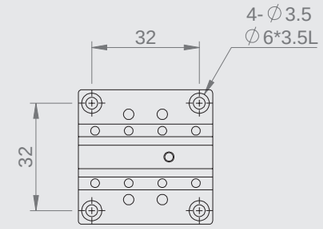

Specification

Unit: mm

Model no.	Table size	Axis	Travel stroke	Micrometer minimum reading	Straightness accuracy	Allowable Loading (kgf)	Weight kg	Material	Surface finish
MYCP40-A	40*40	XY axis	±6.5	10 μm	3 μm	1.8	0.28	Aluminum alloy	Black anodized

MYCP60-A

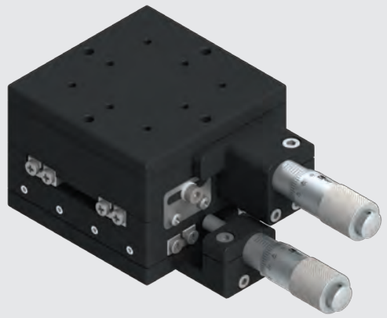

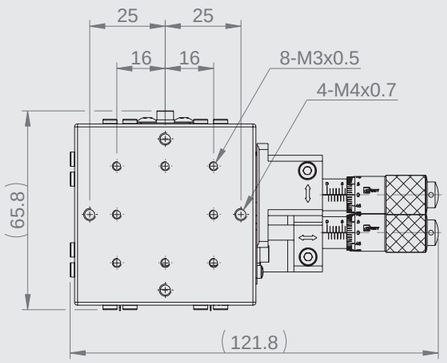

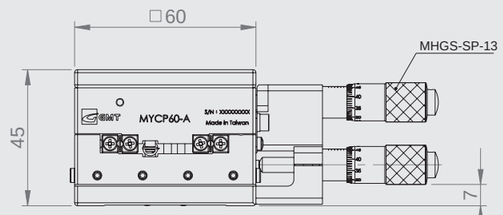

Specification

Unit: mm

Model no.	Table size	Axis	Travel stroke	Micrometer minimum reading	Straightness accuracy	Allowable Loading (kgf)	Weight kg	Material	Surface finish
MYCP60-A	60*60	XY axis	±6.5	10 μm	3 μm	4.5	0.5	Aluminum alloy	Black anodized

MPS20-AMR(L)

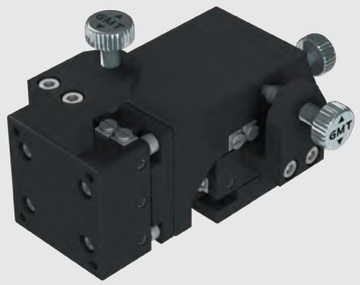

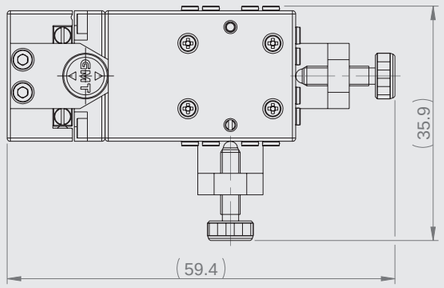

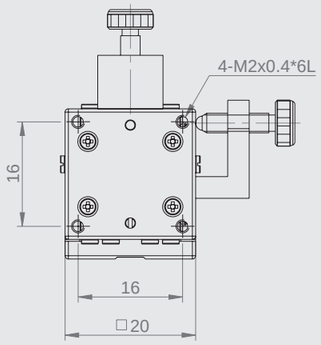

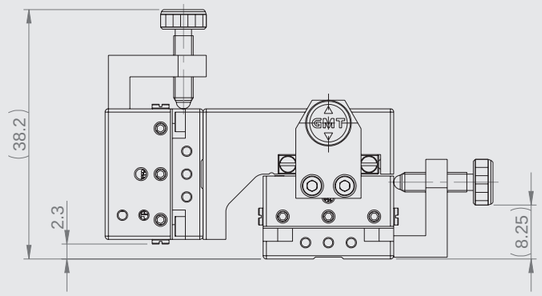

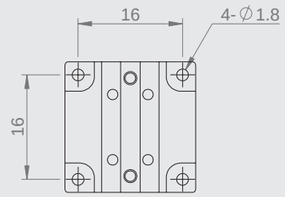

Specification

Unit: mm

Model no.	Table size	Axis	Travel stroke	Movement per knob rotation	Straightness accuracy	Allowable Loading (kgf)	Weight kg	Material	Surface finish
MPS20-AMR(L)	20*20	XYZ-axis	±3	0.5	3 μm	1	0.08	Aluminum alloy	Black anodized

MPS2035-AMR(L)

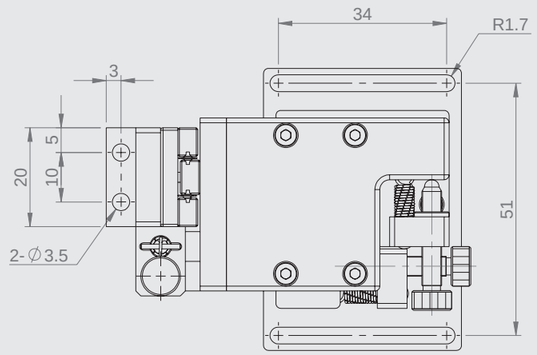

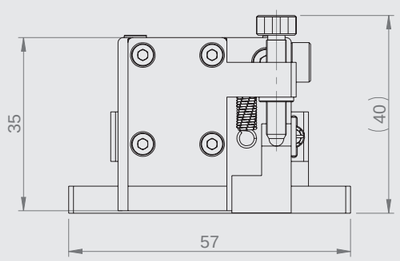

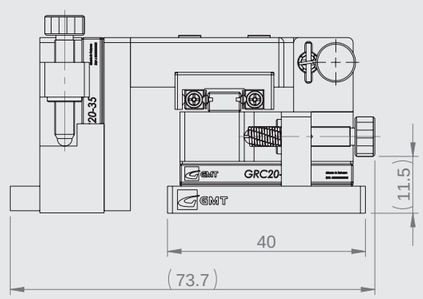

Specification

Unit: mm

Model no.	Table size	Axis	Travel stroke	Movement per knob rotation	Minimum reading	Straightness accuracy	Allowable Loading (kgf)	Weight kg	Material	Surface finish
MPS2035-AMR(L)	20*35	XYZ-axis	±5	0.25	10 μm	3 μm	1.5	0.2	Aluminum alloy	Black anodized

MPS40-SMR(L)

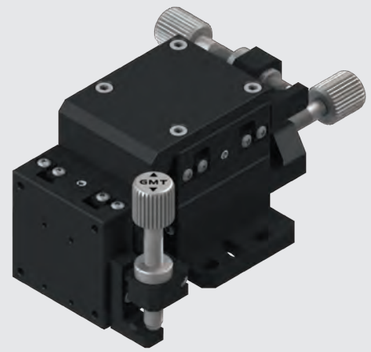

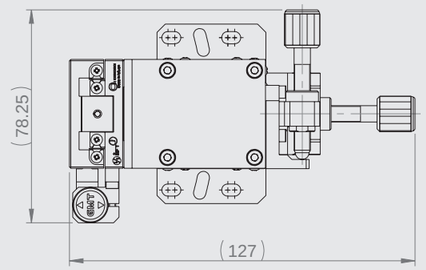

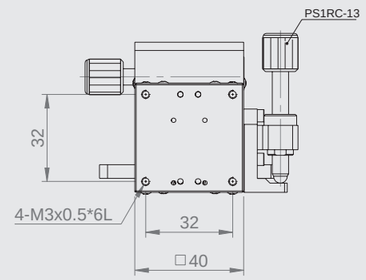

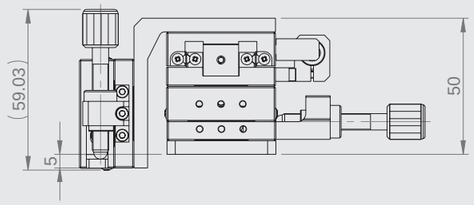

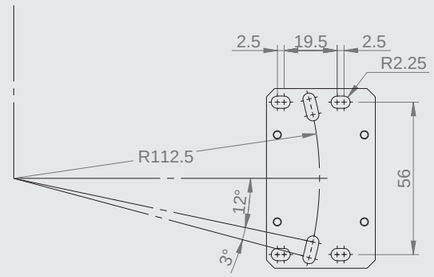

Specification

Unit: mm

Model no.	Table size	Axis	Travel stroke	Movement per knob rotation	Minimum reading	Straightness accuracy	Allowable Loading (kgf)	Weight kg	Material	Surface finish
MPS40-SMR(L)	40*40	XYZ-axis	±6.5	0.5	10 μm	3 μm	4.5	0.9	SUS440C	黑鉻

MXTH80-FCS

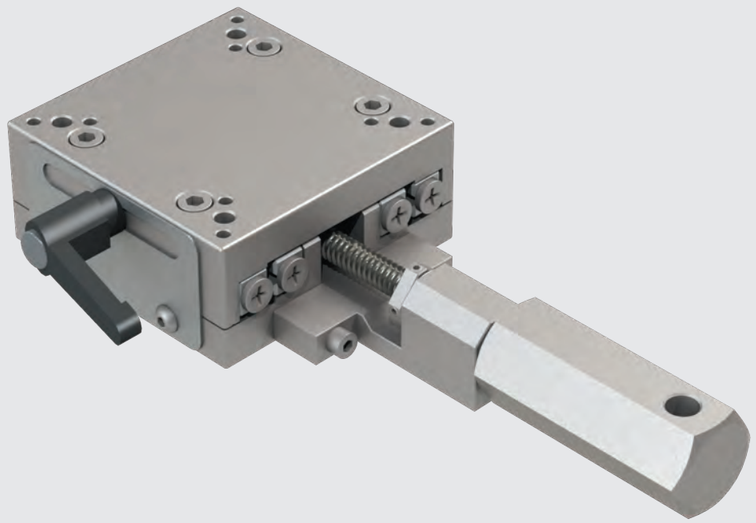

Specification

Unit: mm

Model no.	Table size	Axis	Feed position	Travel stroke	Movement per knob rotation	Minimum reading	Straightness accuracy	Allowable Loading (kgf)	Weight kg	Material	Surface finish
MXTH80-FCS	80*80	X axis	中央	±20	1.25	0.1 mm / Vernier	15 μm	40.5	1.9	Carbon steel	Electroless nickel plating

Crossed roller guiding (Feeding screw type) ▶ X axis ▶ Carbon steel
Crossed roller | Heavy loading | 80*80
GMT GLOBAL INC.
Crossed roller stages
80*80

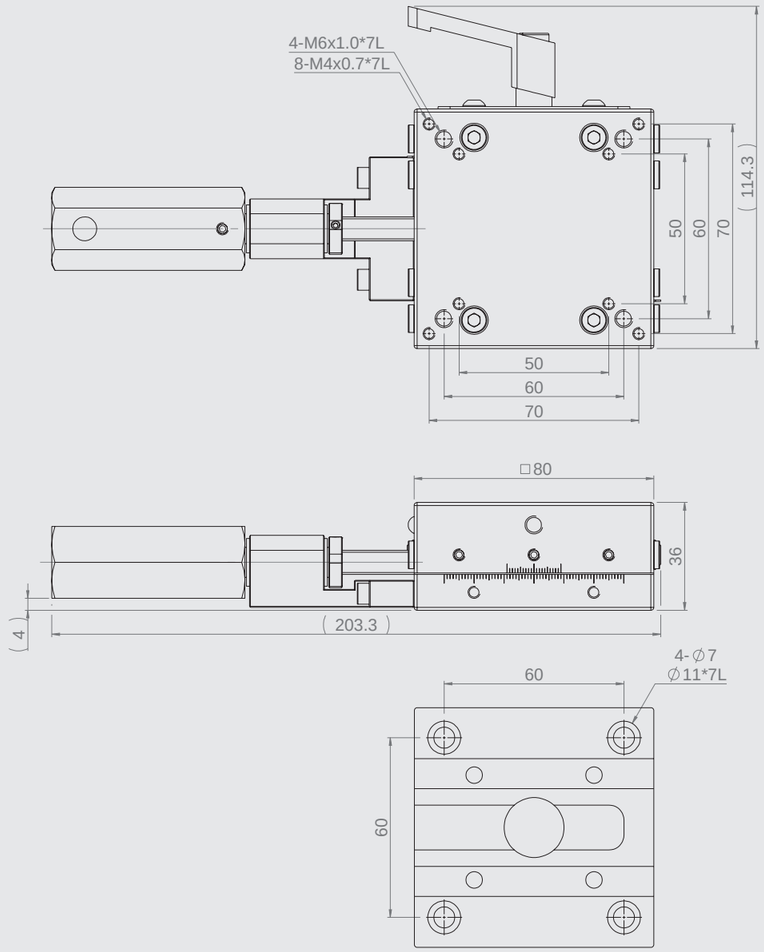

MX25-SC

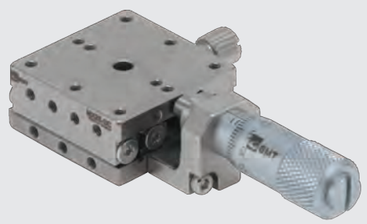

MX25-SS

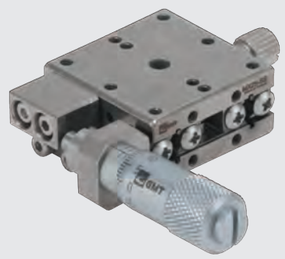

MY25-SC

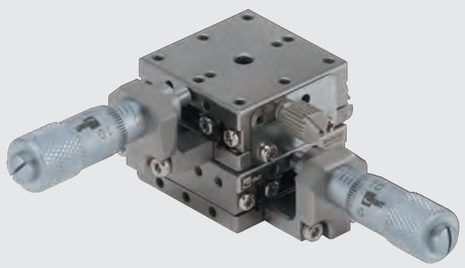

MY25-SS

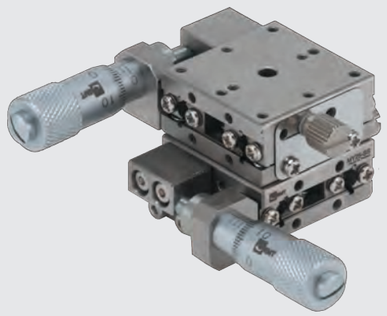

Specification

Unit: mm

Model no.	Table size	Axis	Feed position	Travel stroke	Micrometer minimum reading	Straightness accuracy	Allowable Loading (kgf)	Weight kg	Material	Surface finish
MX25-SC	25*25	X axis	Central	±3.2	10μm	3μm	4	0.07	SUS 440C	Electroless nickel plating
MX25-SS			Side							
MY25-SC		XY-axis	Central				3.9	0.14		
MY25-SS			Side							

MX25-SC

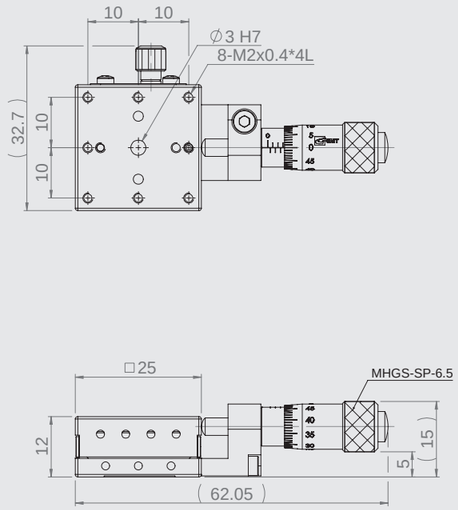

MX25-SS

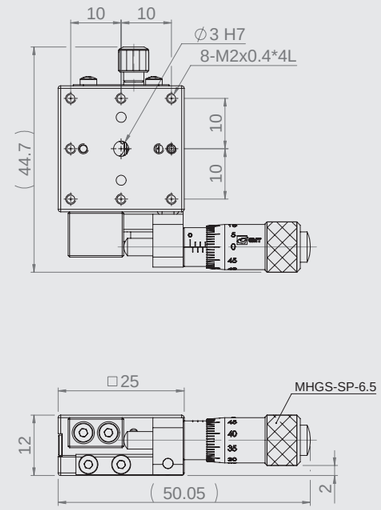

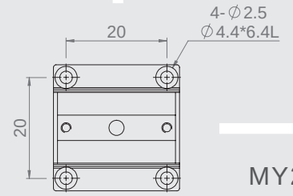

MX(Y)25-S
Mounting dimensions

MY25-SC

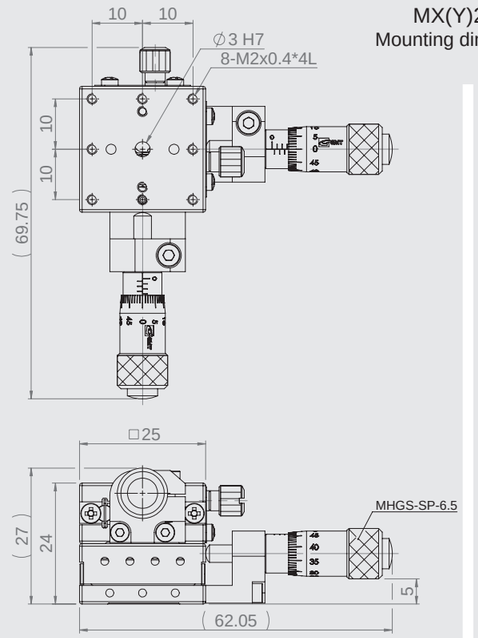

MY25-SS

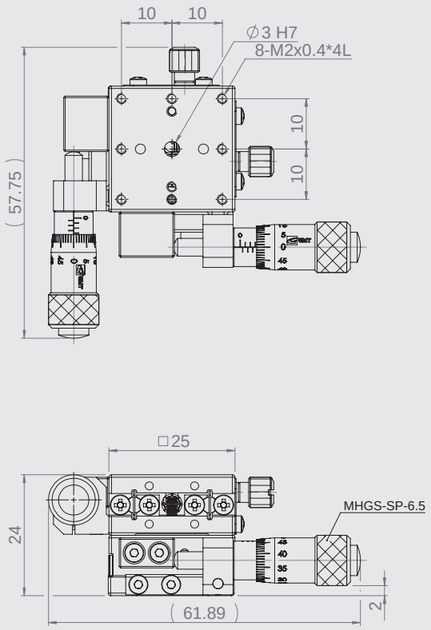

MX30-SC

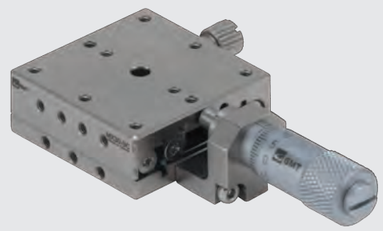

MX30-SS

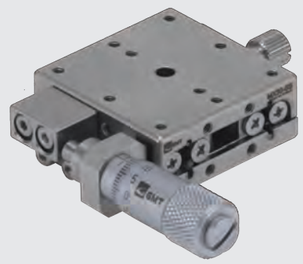

MY30-SC

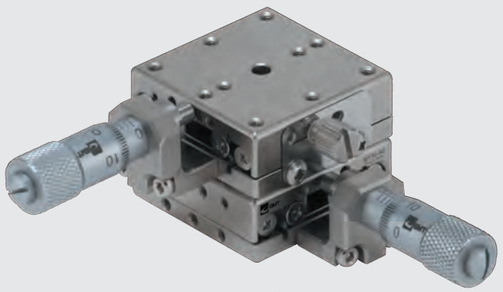

MY30-SS

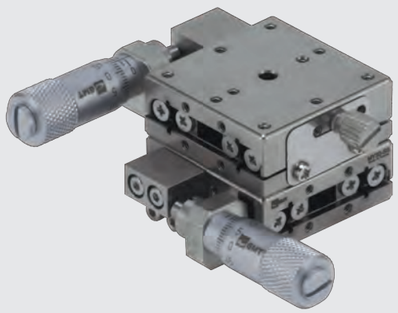

Specification

Unit: mm

Model no.	Table size	Axis	Feed position	Travel stroke	Micrometer minimum reading	Straightness accuracy	Allowable Loading (kgf)	Weight kg	Material	Surface finish
MX30-SC	30*30	X axis	Central	±3.2	10μm	3μm	6	0.095	SUS 440C	Electroless nickel plating
MX30-SS			Side							
MY30-SC		XY-axis	Central				5.9	1.9		
MY30-SS			Side							

MX30-SC

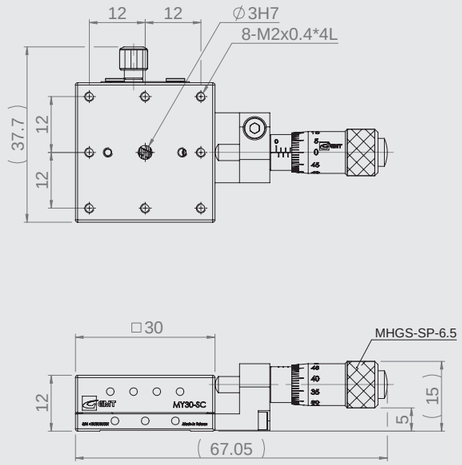

MX30-SS

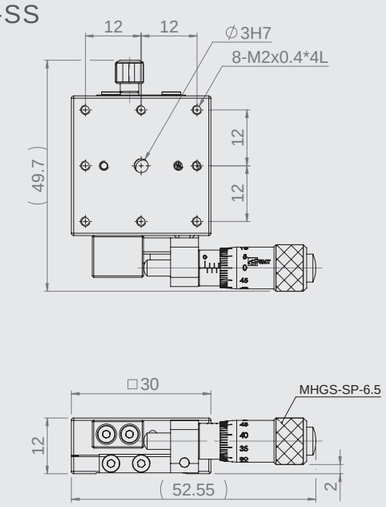

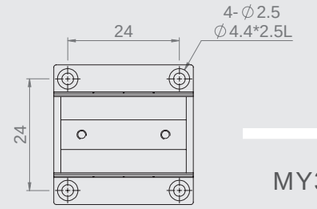

MX(Y)30-S
Mounting dimensions

MY30-SC

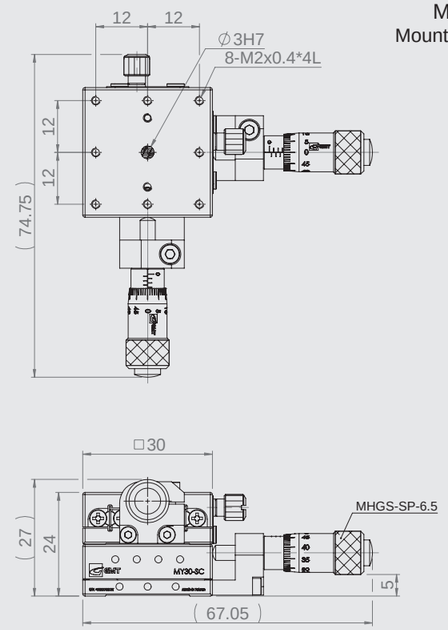

MY30-SS

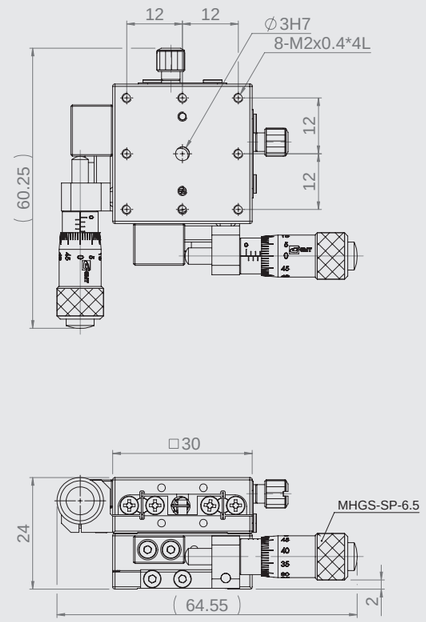

MX40-SC

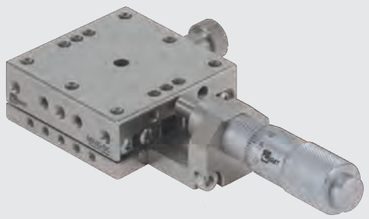

MX40-SS

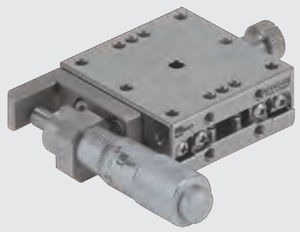

MY40-SC

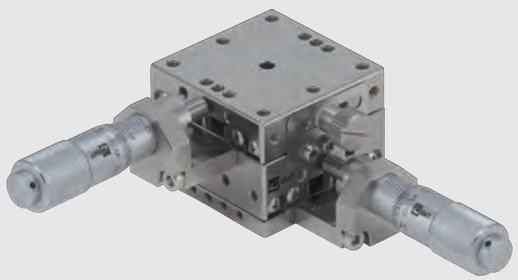

MY40-SS

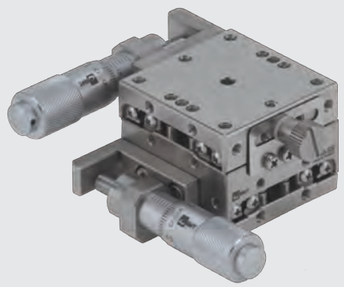

Specification

Unit: mm

Model no.	Table size	Axis	Feed position	Travel stroke	Micrometer minimum reading	Straightness accuracy	Allowable Loading (kgf)	Weight kg	Material	Surface finish
MX40-SC	40*40	X axis	Central	±6.5	10μm	3μm	10	0.23	SUS 440C	Electroless nickel plating
MX40-SS			Side							
MY40-SC		XY-axis	Central				9.7	0.46		
MY40-SS			Side							

MX40-SC

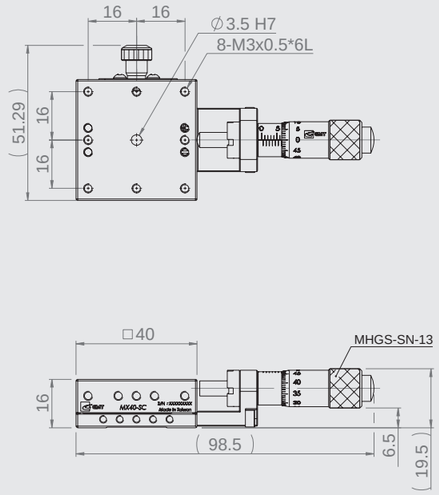

MX40-SS

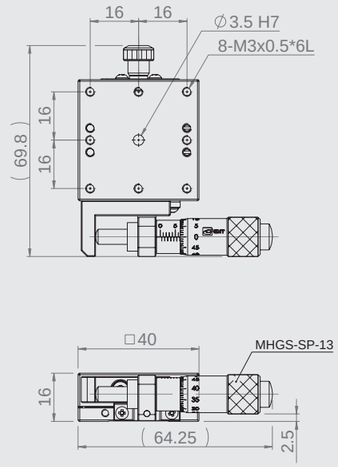

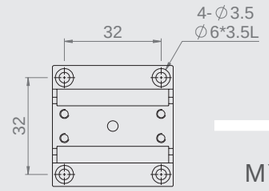

MX(Y)40-S
Mounting dimensions

MY40-SC

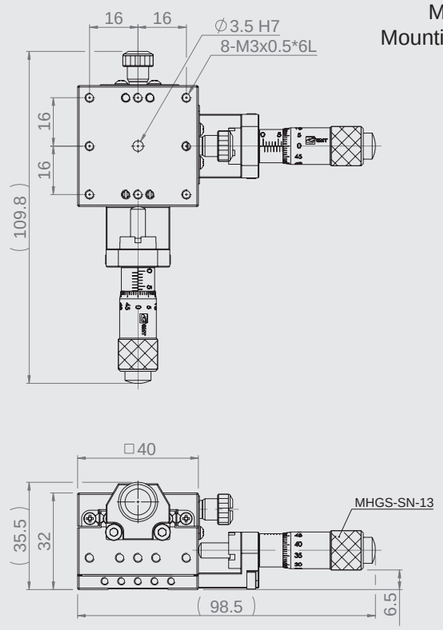

MY40-SS

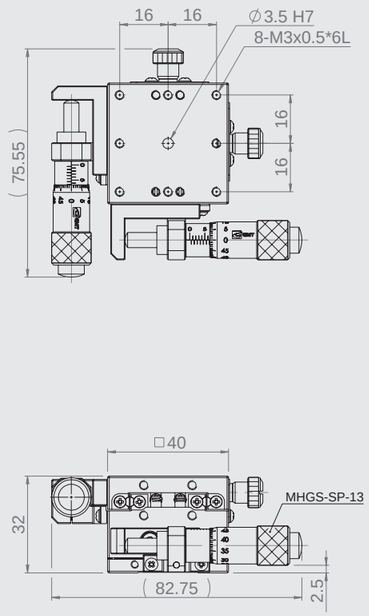

MX50-SC

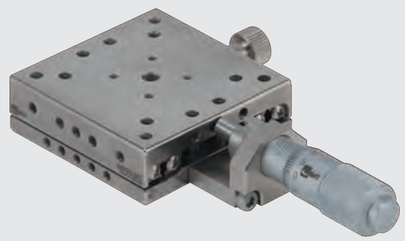

MX50-SS

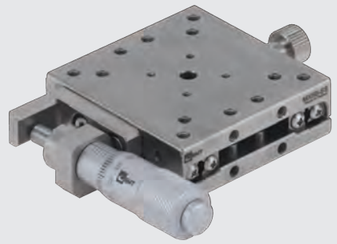

MY50-SC

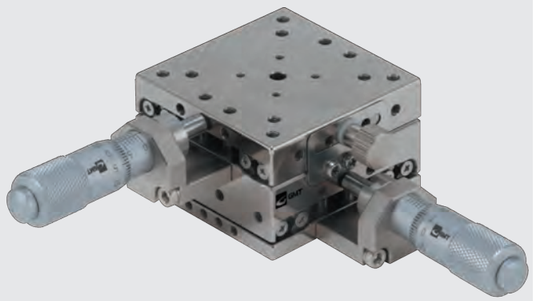

MY50-SS

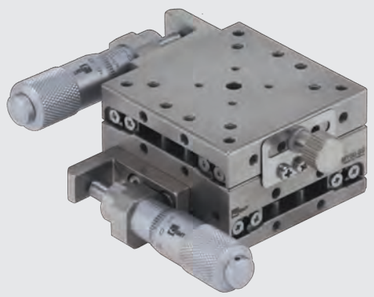

Specification

Unit: mm

Model no.	Table size	Axis	Feed position	Travel stroke	Micrometer minimum reading	Straightness accuracy	Allowable Loading (kgf)	Weight kg	Material	Surface finish
MX50-SC	50*50	X axis	Central	±6.5	10μm	3μm	15	0.28	SUS 440C	Electroless nickel plating
MX50-SS			Side							
MY50-SC		XY-axis	Central				14.7	0.56		
MY50-SS			Side							

MX50-SC

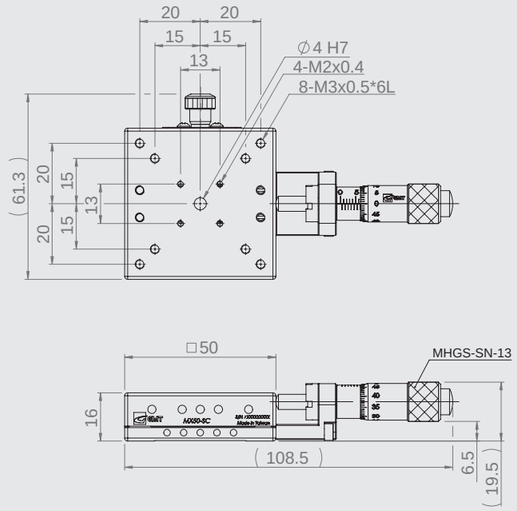

MX50-SS

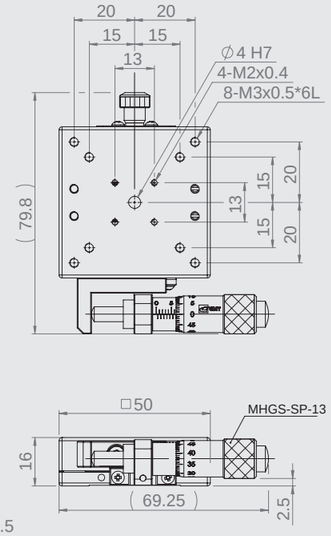

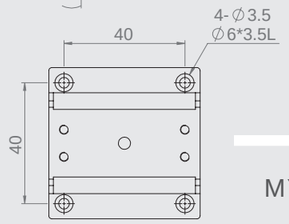

MX(Y)50-S
Mounting dimensions

MY50-SC

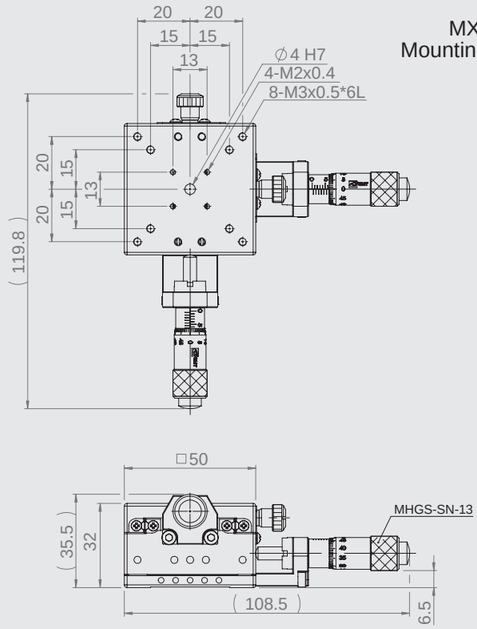

MY50-SS

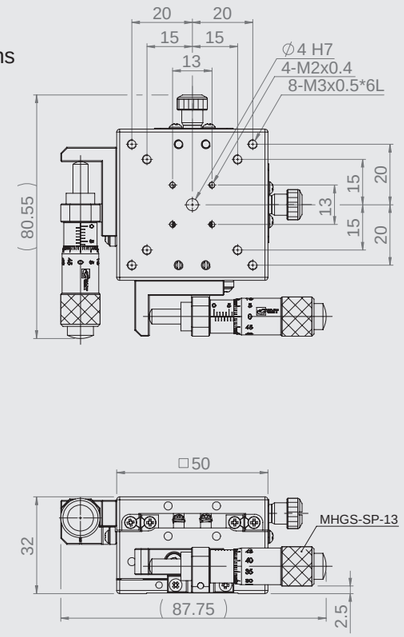

MX60-SC

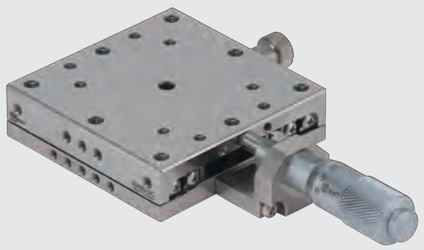

MX60-SS

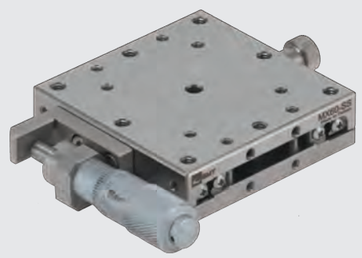

MY60-SC

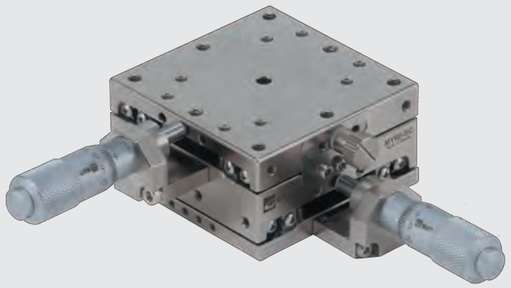

MY60-SS

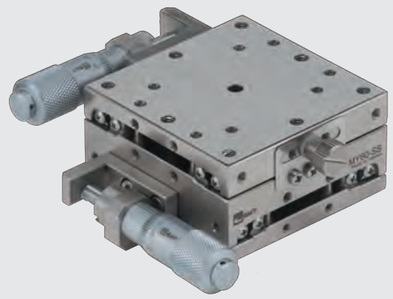

Specification

Unit: mm

Model no.	Table size	Axis	Feed position	Travel stroke	Micrometer minimum reading	Straightness accuracy	Allowable Loading (kgf)	Weight kg	Material	Surface finish
MX60-SC	60*60	X axis	Central	±6.5	10μm	3μm	20	0.4	SUS 440C	Electroless nickel plating
MX60-SS			Side							
MY60-SC		XY-axis	Central				19.6	0.8		
MY60-SS			Side							

MX60-SC

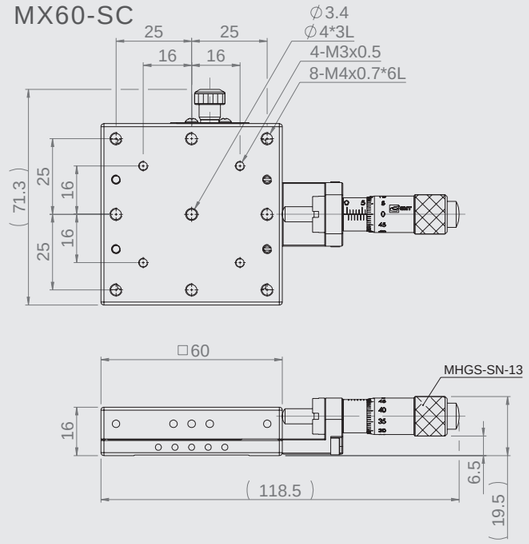

MX60-SS

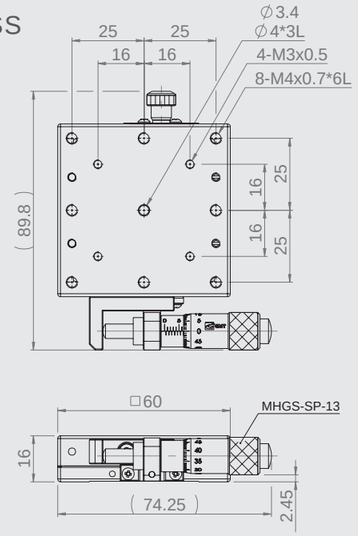

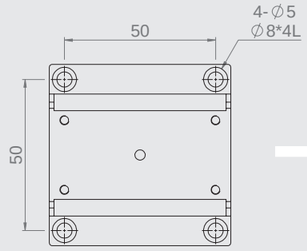

MX(Y)60-S
Mounting dimensions

MY60-SC

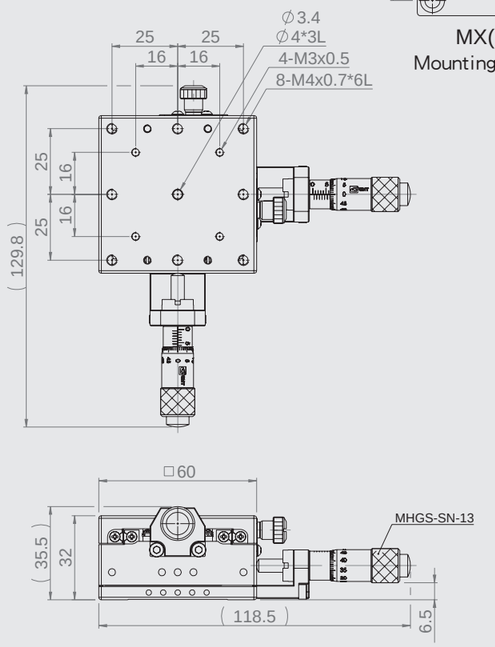

MY60-SS

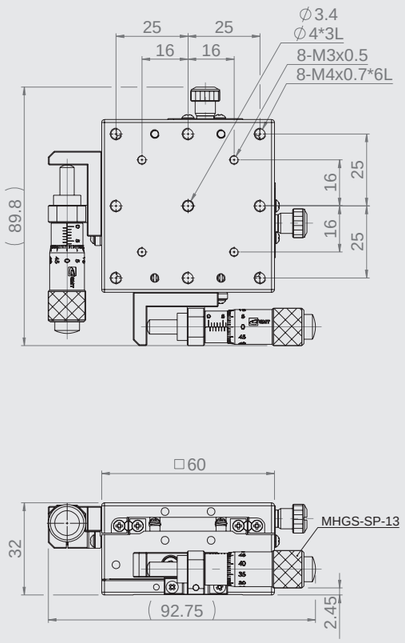

MX70-SC

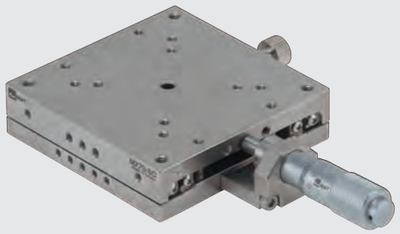

MX70-SS

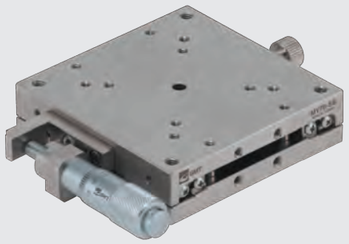

MY70-SC

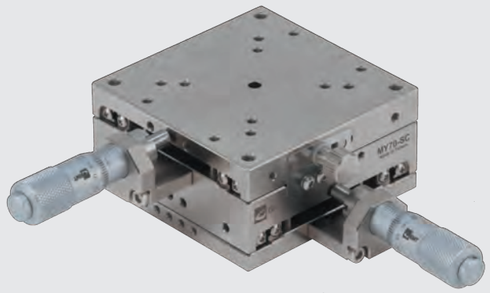

MY70-SS

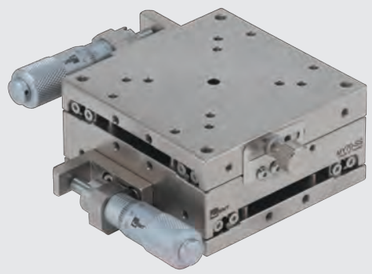

Specification

Unit: mm

Model no.	Table size	Axis	Feed position	Travel stroke	Micrometer minimum reading	Straightness accuracy	Allowable Loading (kgf)	Weight kg	Material	Surface finish
MX70-SC	70*70	X axis	Central	±6.5	10μm	3μm	23	0.58	SUS 440C	Electroless nickel plating
MX70-SS			Side							
MY70-SC		XY-axis	Central				22.4	1.16		
MY70-SS			Side							

MX70-SC

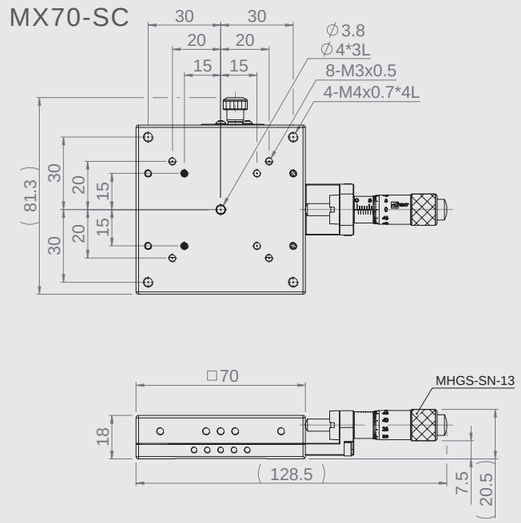

MX70-SS

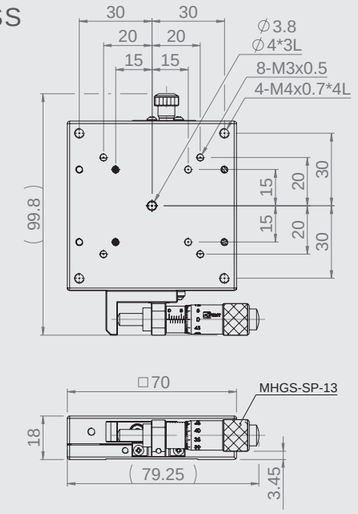

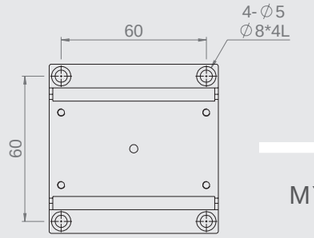

MX(Y)70-S
Mounting dimensions

MY70-SC

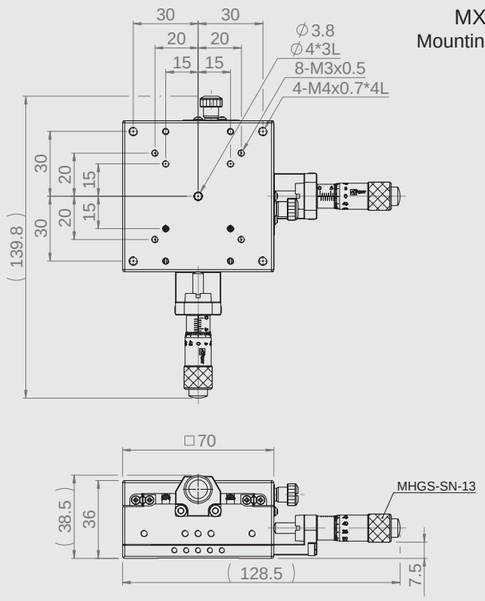

MY70-SS

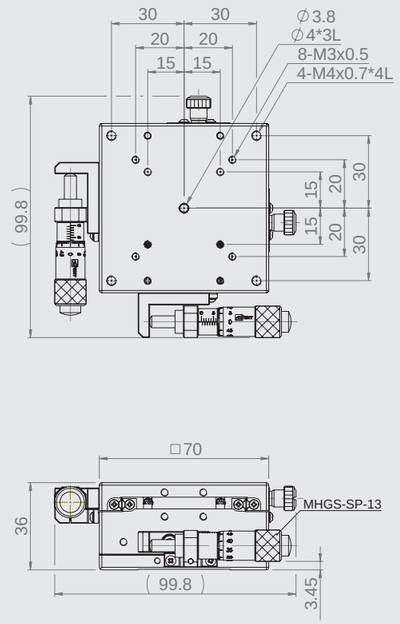

MX80-SC

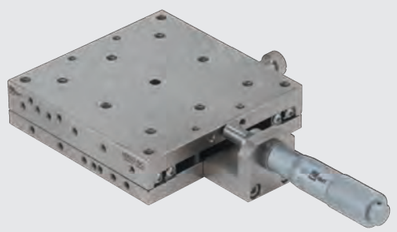

MX80-SS

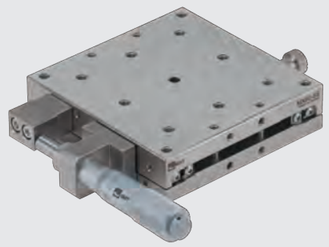

MY80-SC

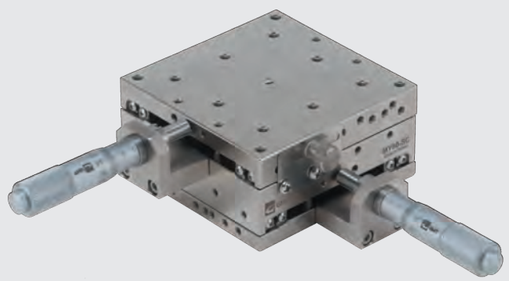

MY80-SS

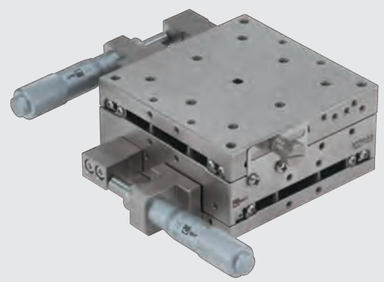

Specification

Unit: mm

Model no.	Table size	Axis	Feed position	Travel stroke	Micrometer minimum reading	Straightness accuracy	Allowable Loading (kgf)	Weight kg	Material	Surface finish
MX80-SC	80*80	X axis	Central	±12.5	10μm	3μm	27	0.9	SUS 440C	Electroless nickel plating
MX80-SS			Side							
MY80-SC		XY-axis	Central				26.1	1.8		
MY80-SS			Side							

MX80-SC

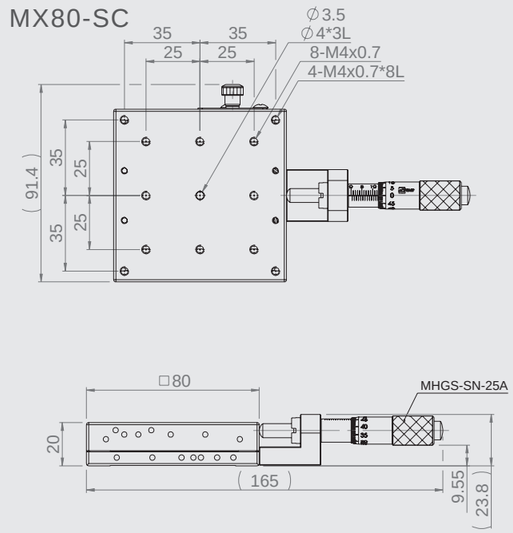

MX80-SS

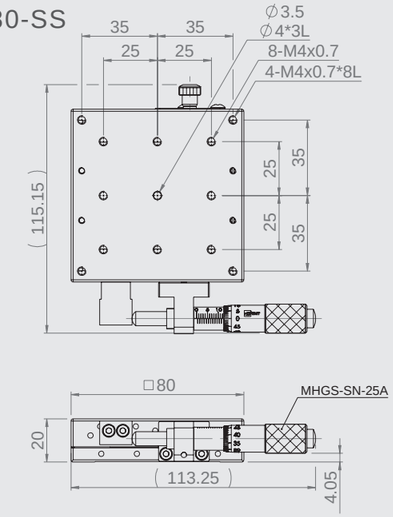

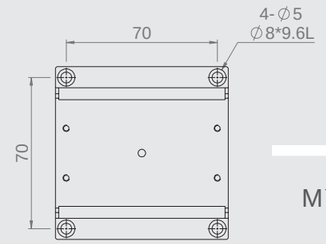

MX(Y)80-S
Mounting dimensions

MY80-SC

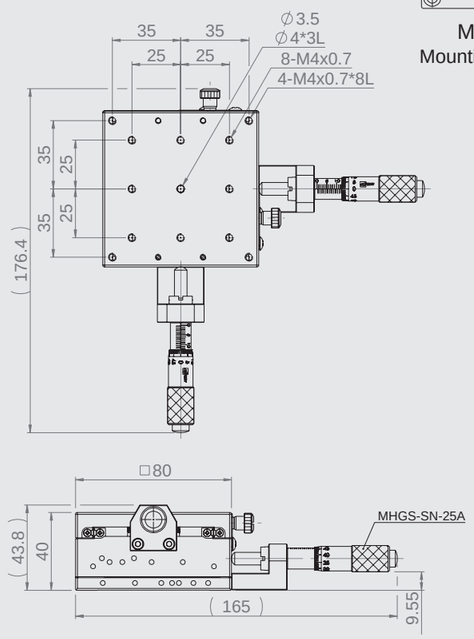

MY80-SS

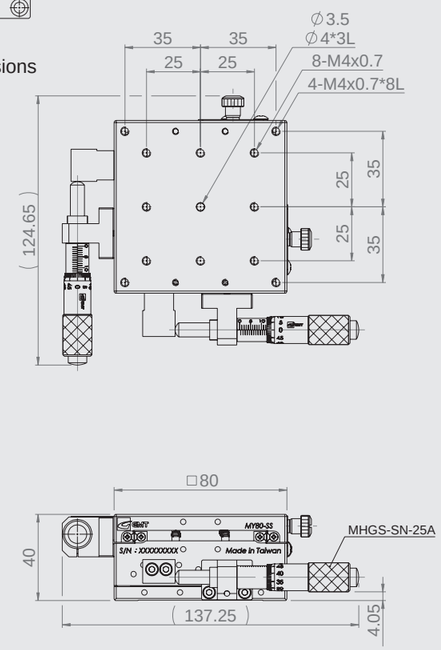

MX100-SC

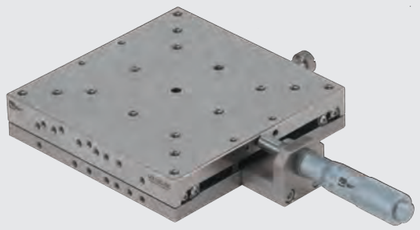

MX100-SS

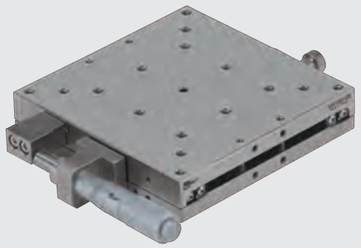

MY100-SC

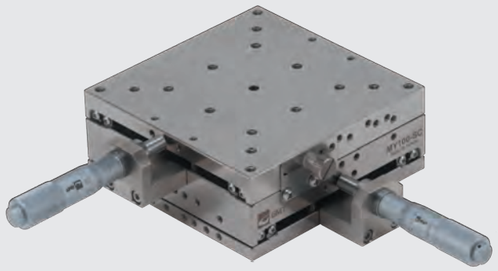

MY100-SS

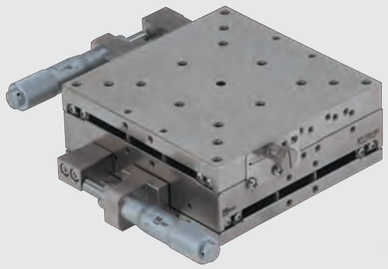

Specification

Unit: mm

Model no.	Table size	Axis	Feed position	Travel stroke	Micrometer minimum reading	Straightness accuracy	Allowable Loading (kgf)	Weight kg	Material	Surface finish
MX100-SC	100*100	X axis	Central	±12.5	10μm	3μm	35	1.33	SUS 440C	Electroless nickel plating
MX100-SS			Side							
MY100-SC		XY-axis	Central				33.6	2.66		
MY100-SS			Side							

Linear ball bearing stages ▶ X axis and XY-axis ▶ Stainless steel
GMT GLOBAL INC.
Linear ball bearing stages | 100*100

Linear ball bearing stages
100*100

MX100-SC

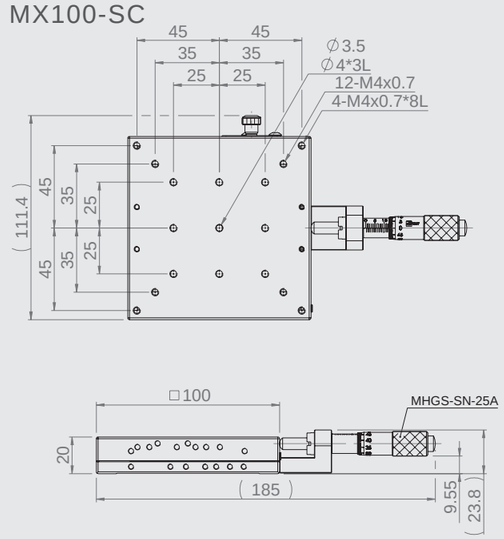

MX100-SS

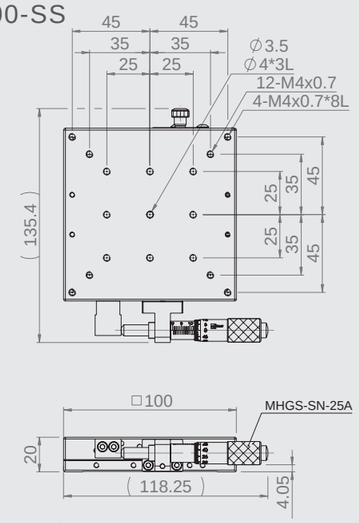

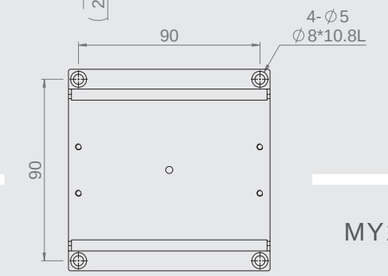

MX(Y)100-S
Mounting dimensions

MY100-SC

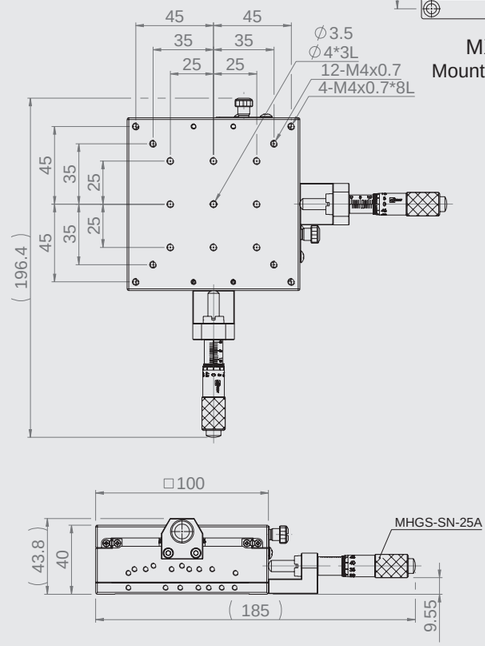

MY100-SS

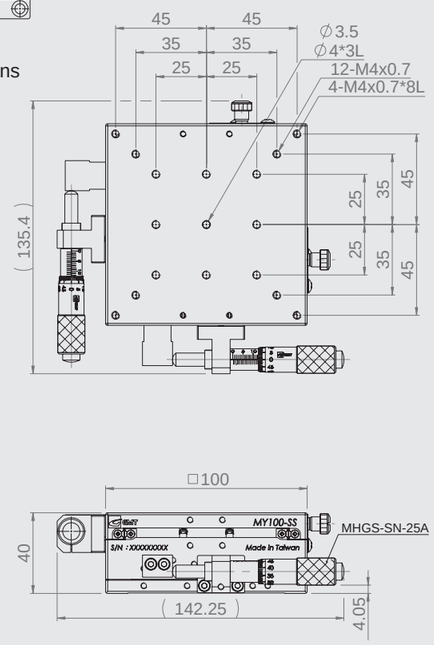

MZL60-SCR

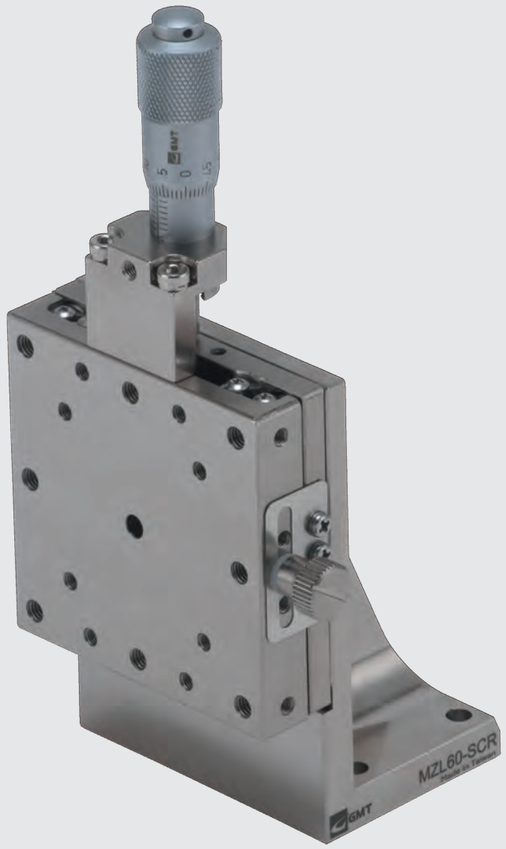

Specification

Unit: mm

Model no.	Table size	Travel Distance	Micrometer minimum reading	移動精度			Allowable	Weight	Material	Surface finish
				真直度	Pitching	Yawing	Loading (kgf)	kg		
MZL25-SCR	25*25	±3.2	10 μm	3 μm	30"	25"	1.0	0.23	SUS 440C	Electroless nickel plating
MZL40-SCR	40*40	±6.5			25"	15"	5.0	0.32		
MZL60-SCR	60*60							0.58		
MZL80-SCR	80*80	±12.5						1.2		

★ 其他 Z 軸用托架規格選擇，請參閱 P.231 ~ P.232

MZL25-SCR

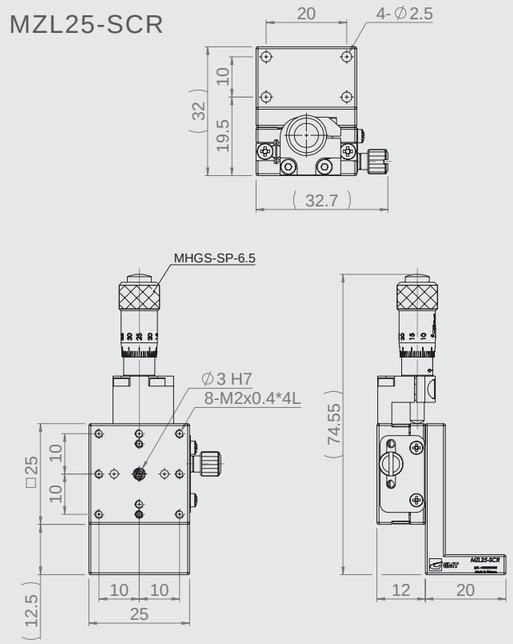

MZL40-SCR

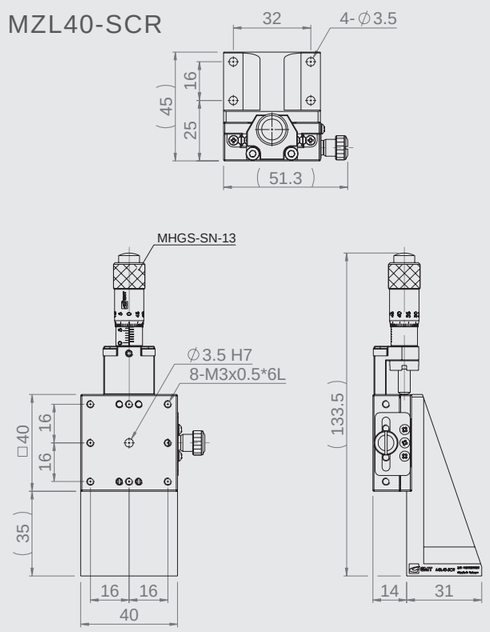

MZL60-SCR

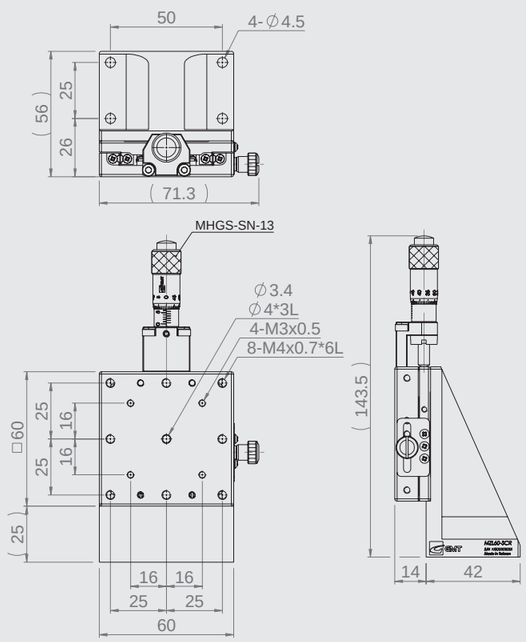

MZL80-SCR

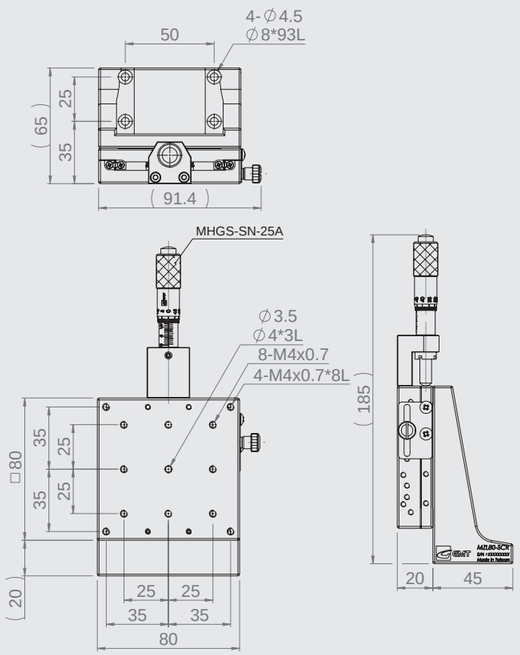

MZL25-SS

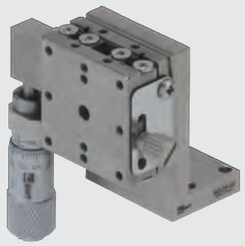

MZL40-SS

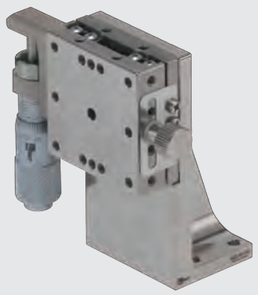

MZL60-SS

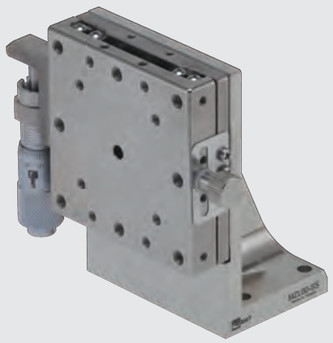

MZL80-SS

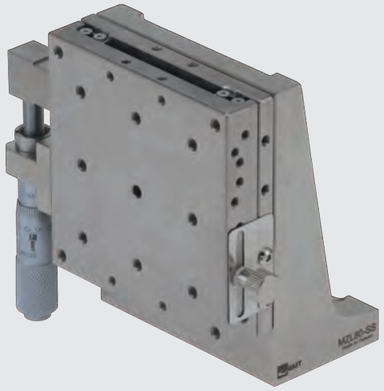

Specification

Unit: mm

Model no.	Table size	Travel Distance	Micrometer minimum reading	移動精度			Allowable	Weight	Material	Surface finish
				真直度	Pitching	Yawing	Loading (kgf)	kg		
MZL25-SS	25*25	±3.2	10 μm	3 μm	30"	25"	1.0	0.09	SUS 440C	Electroless nickel plating
MZL40-SS	40*40	±6.5			25"	15"	5.0	0.32		
MZL60-SS	60*60							0.58		
MZL80-SS	80*80	±12.5						1.2		

★ 其他 Z 軸用托架規格選擇，請參閱 P.231 ~ P.232

MZL25-SS

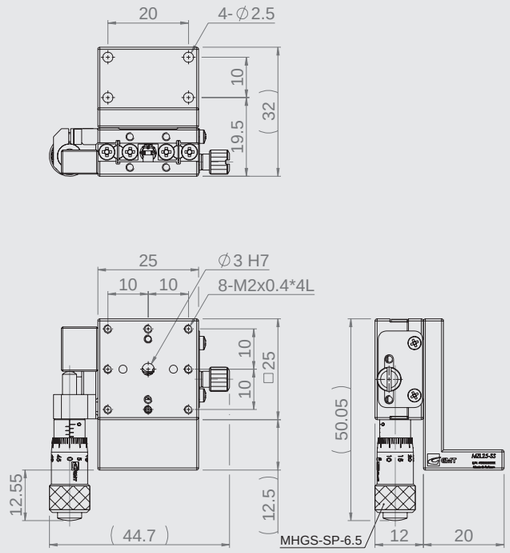

MZL40-SS

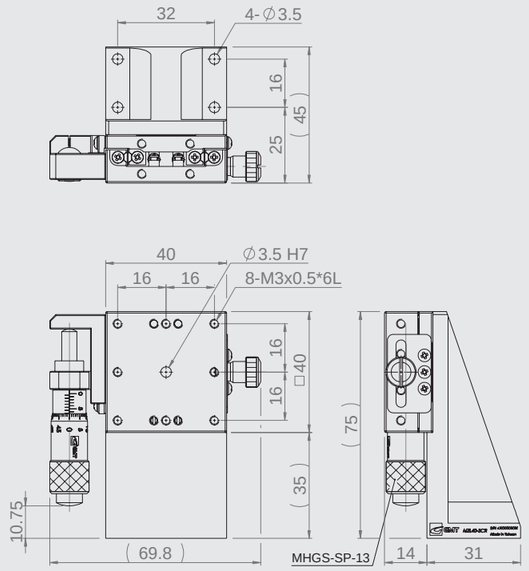

MZL60-SS

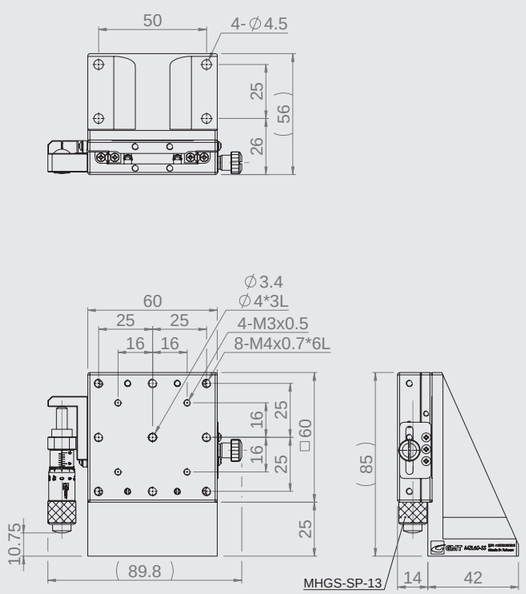

MZL80-SS

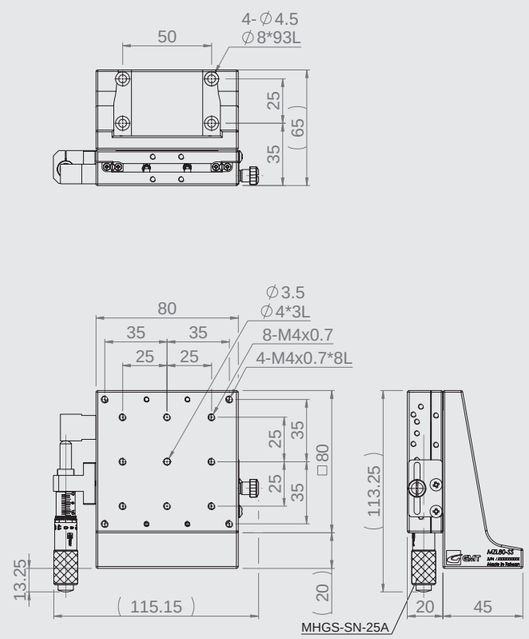

MYW40-SS

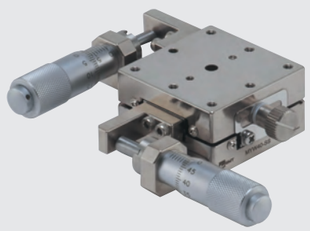

MYW60-SS

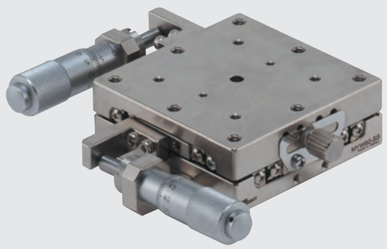

MYW80-SS

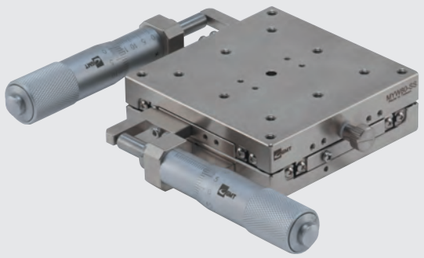

MYW100-SS

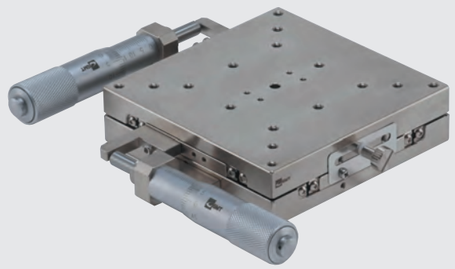

Specification

Unit: mm

Model no.	Table size	Axis	Feed position	Travel stroke	Micrometer minimum reading	Straightness accuracy	Allowable Loading (kgf)	Weight kg	Material	Surface finish
MYW40-SS	40*40	XY-axis	Side	±6.5	10μm	3μm	9	0.34	SUS 440C	Electroless nickel plating
MYW60-SS	60*60			±6.5			19	0.64		
MYW80-SS	80*80			±12.5			20	1.32		
MYW100-SS	100*100			±12.5			25	2		

MYW40-SS

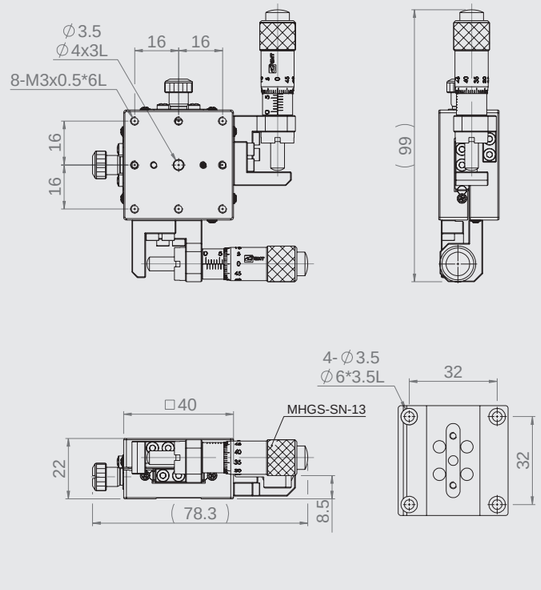

MYW60-SS

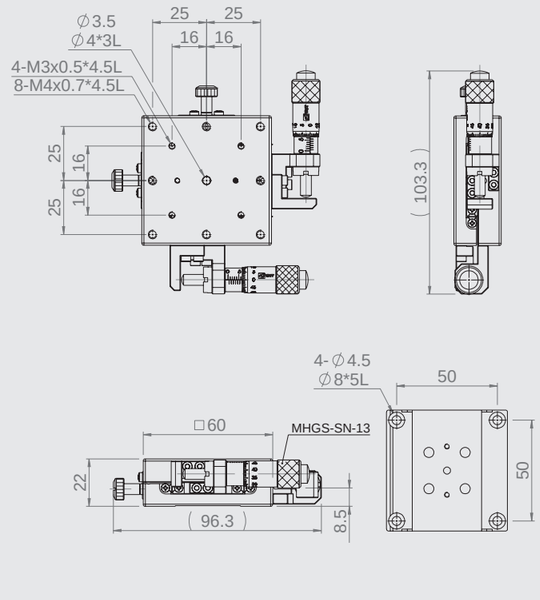

MYW80-SS

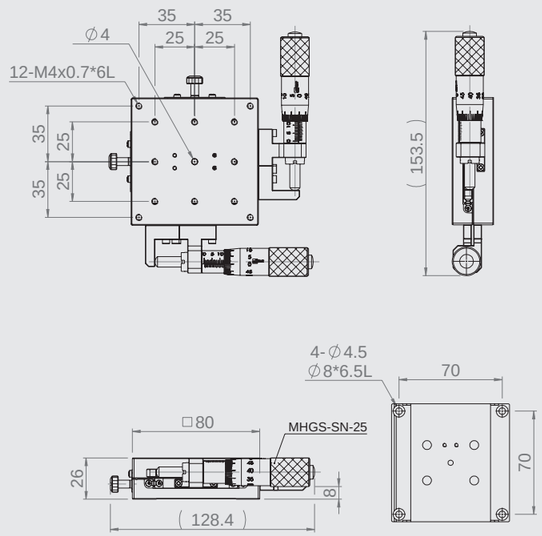

MYW100-SS

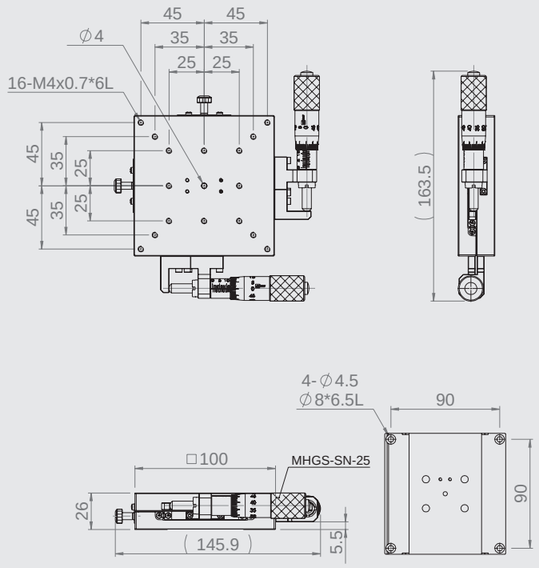

MYW40-SC

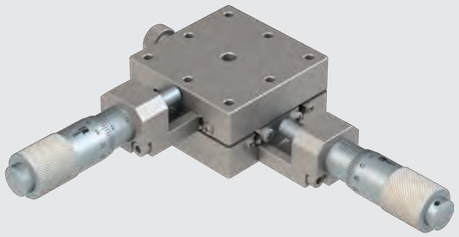

MYW60-SC

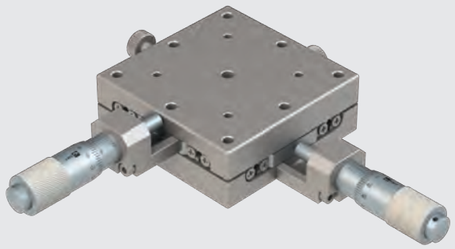

MYW80-SC

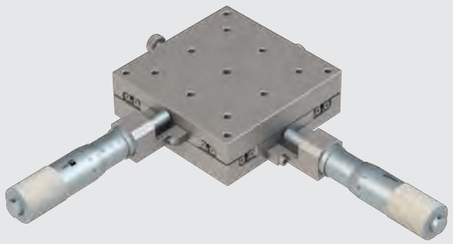

MYW100-SC

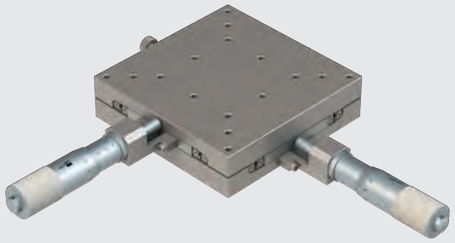

Specification

Unit: mm

Model no.	Table size	Axis	Feed position	Travel stroke	Micrometer minimum reading	Straightness accuracy	Allowable Loading (kgf)	Weight kg	Material	Surface finish
MYW40-SC	40*40	XY-axis	Side	±6.5	10μm	3μm	9	0.34	SUS 440C	Electroless nickel plating
MYW60-SC	60*60						19	0.64		
MYW80-SC	80*80			±12.5			20	1.32		
MYW100-SC	100*100						25	2		

MYW40-SC

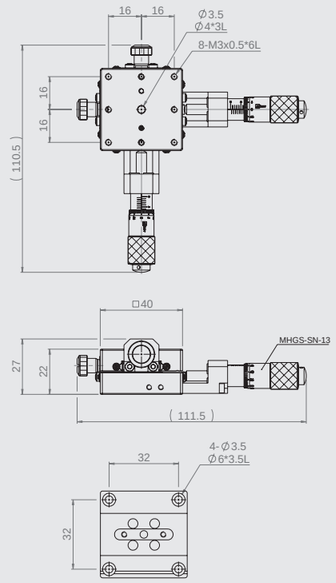

MYW60-SC

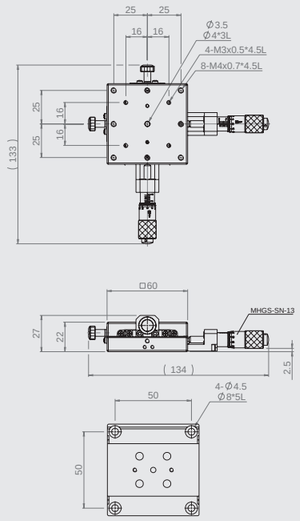

MYW80-SC

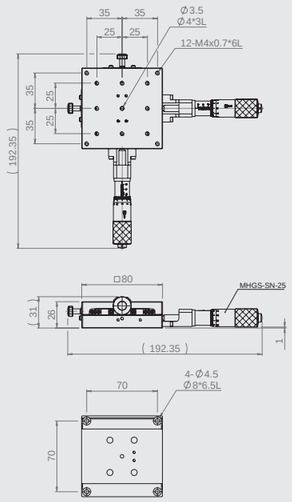

MYW100-SC

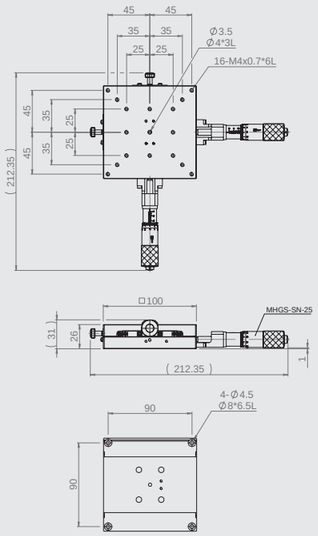

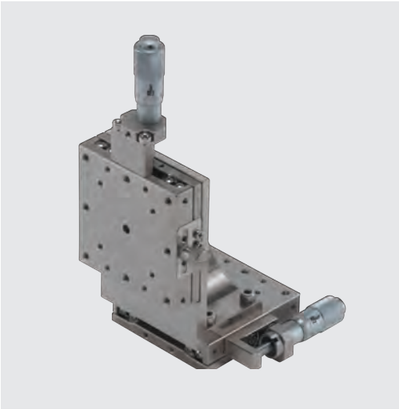

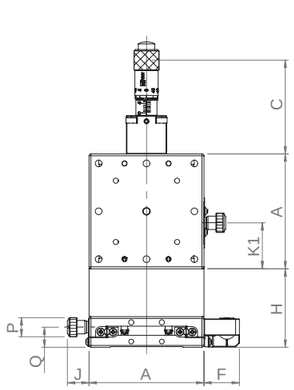

Front side viewing

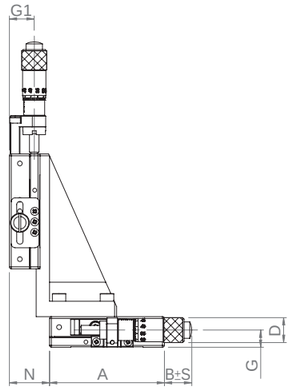

Right side viewing

Unit: mm

Position of Micrometer

Specification	Side up	Side down	Central	Reversed
	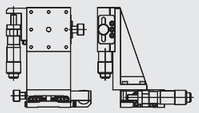	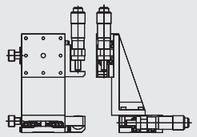	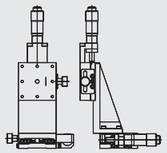	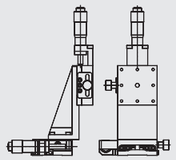
Code	C	CU	A	R

Specification

Unit: mm

Model no.		Detail dimension from front side viewing							Detail dimensions from right side viewing				
Type	A	H	C	K1	P	Q	J	F	B ± S (Movement)	N	D	G	G1
MXZ	25	24.5	37.1	15	6	8.5	7.7	11	25±3.2	6.8	10	7	10
	30	32	37.1	17.5	6	8.5	7.7	11	22.5±3.2	5	10	7	10
	40	51	58.5	20	10	10.6	11.2	18.5	24.3±6.5	5	13	8.9	13
	50	46	58.5	25	10	10.5	11.2	18.5	19.3±6.5	20	13	9	13
	60	41	58.5	24	10	10.5	11.2	18.5	14.3±6.5	21	13	8.9	13
	70	43	58.5	29	10	11.5	11.2	18.5	9.3±6.5	12	13	10	14
	80	40	85	55	10	14.5	11.2	24	33.3±12.5	20	13.5	10.8	16
	100	60	99.5	67.5	10	14.5	11.2	24	18.3±12.5	36	13.5	10.8	16

Model no.	Table size	Allowable Loading (kgf)	Straightness accuracy	Pitching	Yawing	Axis	Weight kg	Material	Surface finish
MXZ25-S	25*25	1	5 μm	30"	25"	XZ	0.15	SUS 440C	Electroless nickel plating
MXZ30-S	30*30	5		25"	15"		0.21		
MXZ40-S	40*40						0.51		
MXZ50-S	50*50						0.76		
MXZ60-S	60*60						0.98		
MXZ70-S	70*70						1.44		
MXZ80-S	80*80						2.05		
MXZ100-S	100*100						3.63		

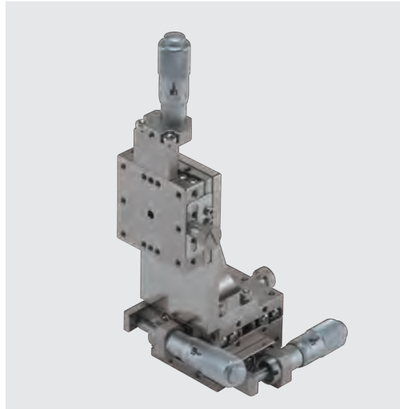

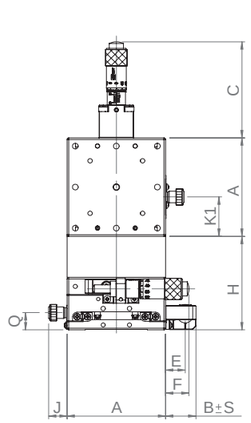

Front side viewing

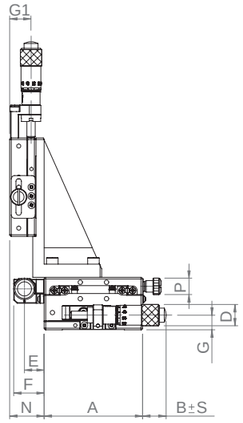

Right side viewing

Unit: mm

Position of Micrometer

Specification	Side up	Side down	Central	Reversed
	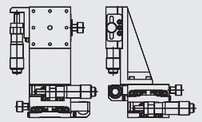	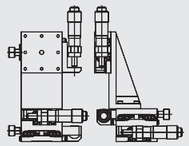	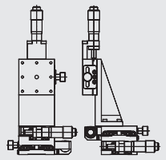	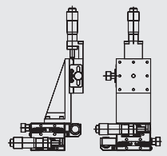
Code	C	CU	A	R

Specification

Unit: mm

Model no.		Detail dimension from front side viewing							Detail dimensions from right side viewing					
Type	A	H	C	K1	Q	J	F	E	B ± S (Movement)	N	D	G	G1	P
MXYZ	25	36.5	37.1	15	8.5	7.7	11	6.8	25.1±3.2	16.8	10	7	10	6
	30	44	37	17.5	8.5	7.7	11	7	22.6±3.2	17	10	7	10	6
	40	67	58.5	20	10.6	11.2	18.5	12	24.3±6.5	21	13	9	13	10
	50	62	58.5	25	10.6	11.2	18.5	12	19.3±6.5	20	13	9	13	10
	60	57	58.5	24	10.5	11.2	18.5	12	14.3±6.5	21	13	9	13	10
	70	61	58.5	29	11.5	11.2	18.5	12	9.3±6.5	12	13	10	14	10
	80	60	85	55	14.5	11.2	24	17	33.3±12.5	20	13.5	10.8	16	10
	100	80	99.5	67.5	14.5	11.2	24	17	18.3±12.5	36	13.5	10.8	16	10

Model no.	Table size	Allowable Loading (kgf)	Straightness accuracy	Pitching	Yawing	Axis	Weight kg	Material	Surface finish
MXYZ25-S	25*25	1	5 μm	30"	25"	XYZ	0.21	SUS 440C	Electroless nickel plating
MXYZ30-S	30*30	5		25"	15"		0.29		
MXYZ40-S	40*40						0.72		
MXYZ50-S	50*50						1.06		
MXYZ60-S	60*60						1.38		
MXYZ70-S	70*70						2.06		
MXYZ80-S	80*80						2.96		
MXYZ100-S	100*100						4.99		

MX25-SC-28

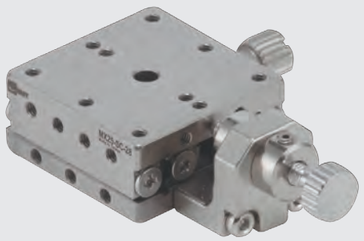

MX25-SS-28

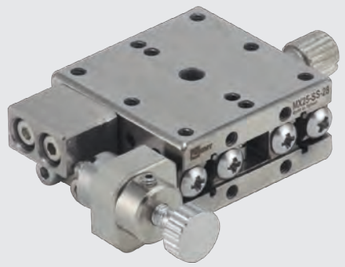

MY25-SC-28

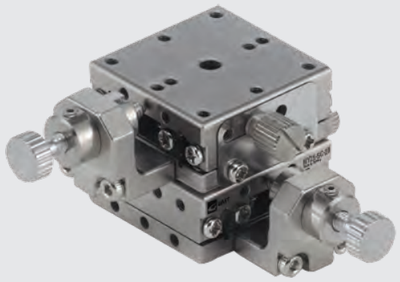

MY25-SS-28

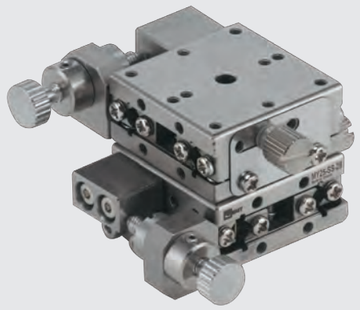

Specification

Unit: mm

Model no.	Table size	Axis	Feed position	Travel stroke	Movement per knob rotation	Straightness accuracy	Allowable Loading (kgf)	Weight kg	Material	Surface finish
MX25-SC-28	25*25	X axis	Central	±3.2	0.5mm	3μm	4	0.07	SUS 440C	Electroless nickel plating
MX25-SS-28			Side							
MY25-SC-28		XY-axis	Central				3.9	0.14		
MY25-SS-28			Side							

MX25-SC-28

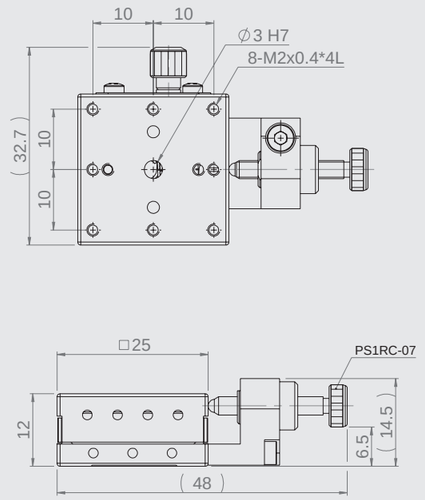

MX25-SS-28

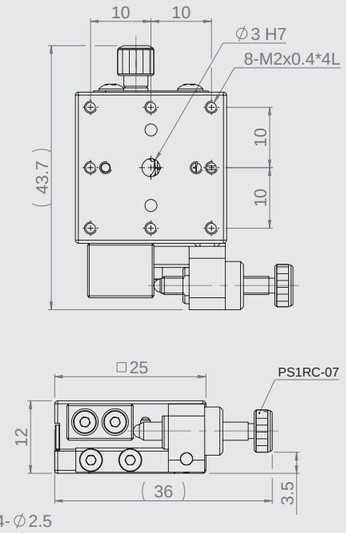

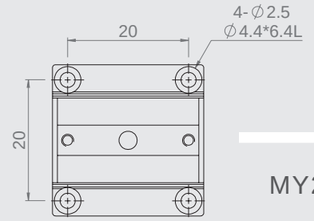

MX(Y)25-S-28
Mounting dimensions

MY25-SC-28

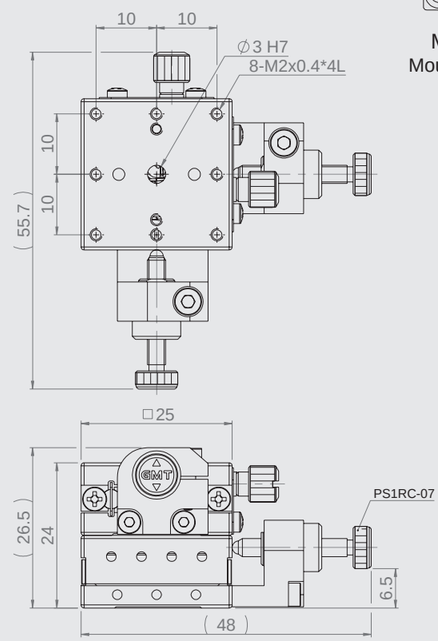

MY25-SS-28

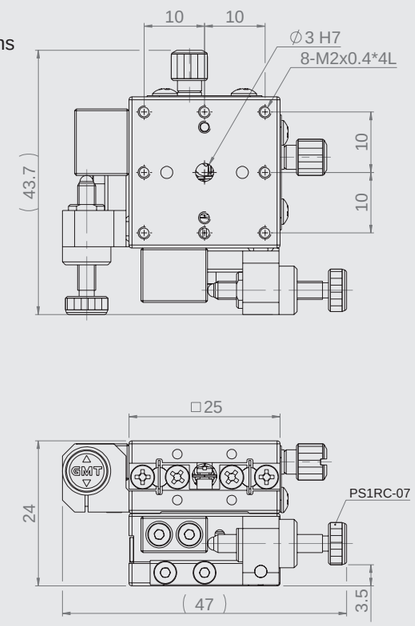

MX30-SC-28

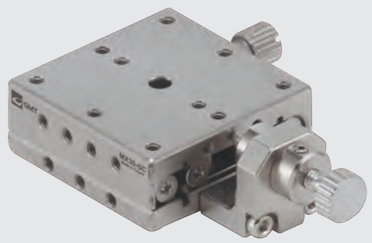

MX30-SS-28

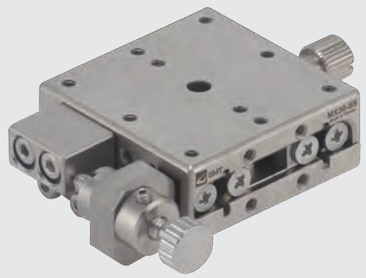

MY30-SC-28

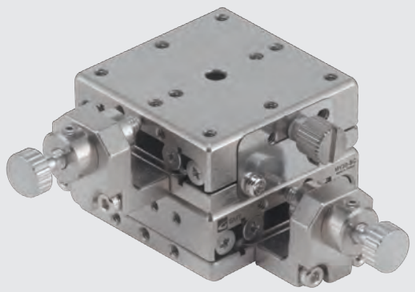

MY30-SS-28

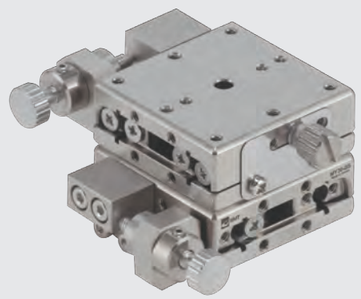

Specification

Unit: mm

Model no.	Table size	Axis	Feed position	Travel stroke	Movement per knob rotation	Straightness accuracy	Allowable Loading (kgf)	Weight kg	Material	Surface finish
MX30-SC-28	30*30	X axis	Central	±3.2	0.5mm	3μm	6	0.95	SUS 440C	Electroless nickel plating
MX30-SS-28			Side							
MY30-SC-28		XY-axis	Central				5.9	1.9		
MY30-SS-28			Side							

MX30-SC-28

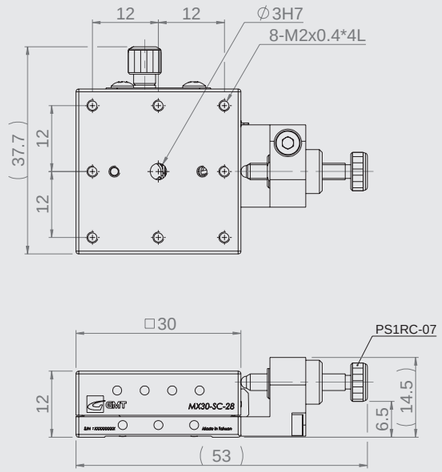

MX30-SS-28

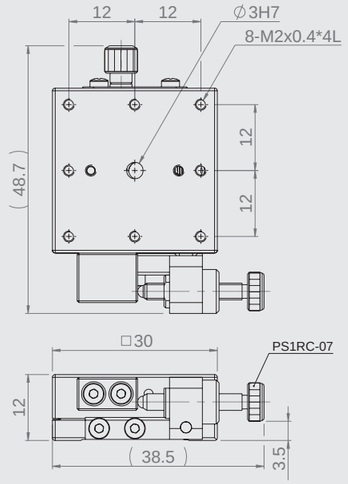

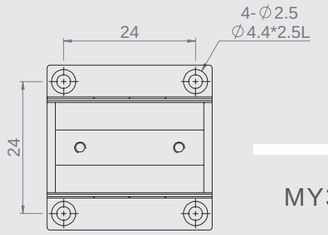

MX(Y)30-S-28
Mounting dimensions

MY30-SC-28

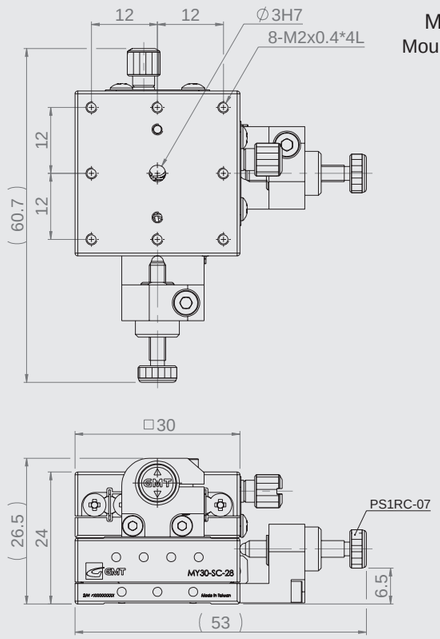

MY30-SS-28

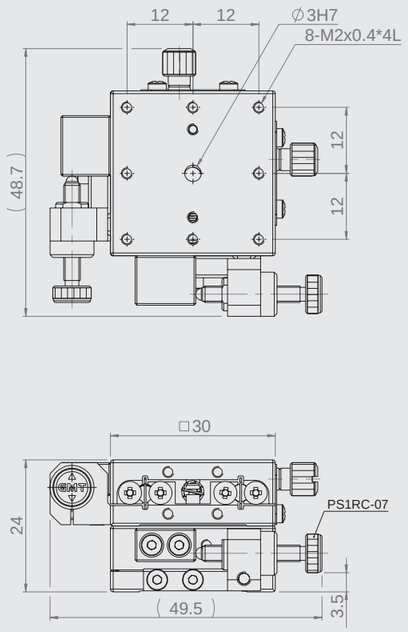

MX40-SC-28

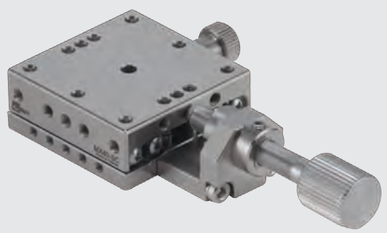

MX40-SS-28

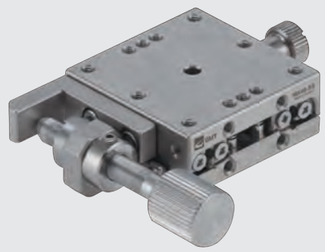

MY40-SC-28

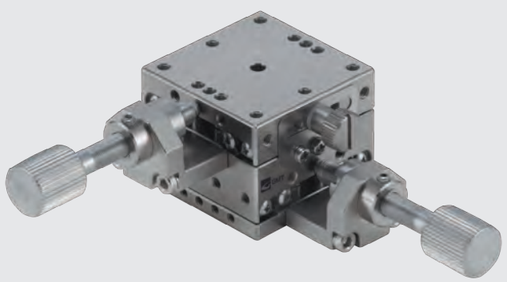

MY40-SS-28

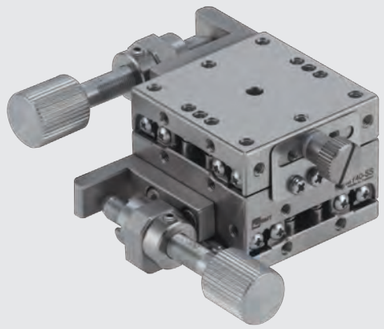

Specification

單位: mm

Model no.	Table size	Axis	Feed position	Travel stroke	Movement per knob rotation	Straightness accuracy	Allowable Loading (kgf)	Weight kg	Material	Surface finish
MX40-SC-28	40*40	X axis	Central	±6.5	0.5mm	3μm	10	0.23	SUS 440C	Electroless nickel plating
MX40-SS-28			Side							
MY40-SC-28		XY-axis	Central				9.7	0.46		
MY40-SS-28			Side							

MX40-SC-28

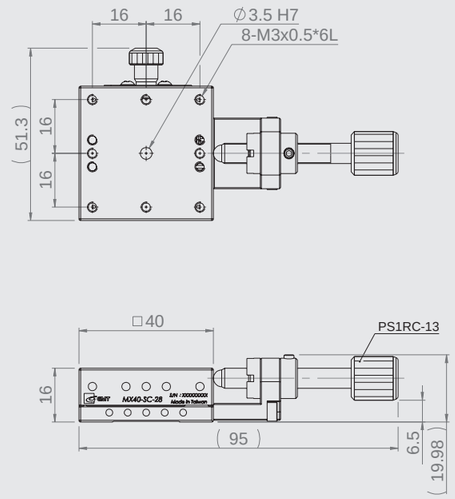

MX40-SS-28

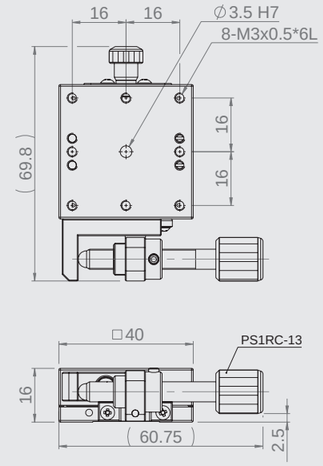

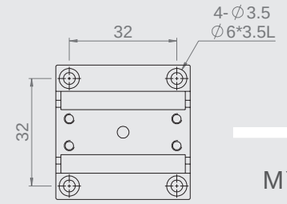

MX(Y)40-S-28
Mounting dimensions

MY40-SC-28

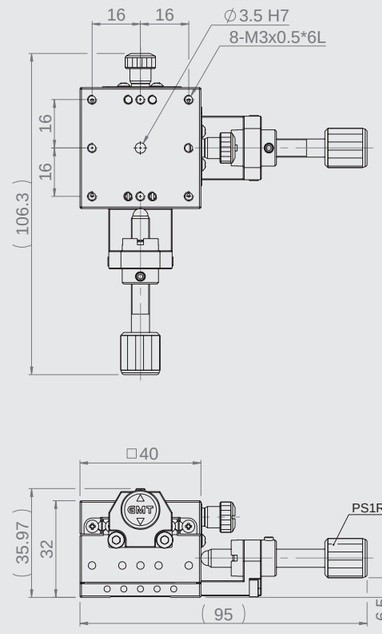

MY40-SS-28

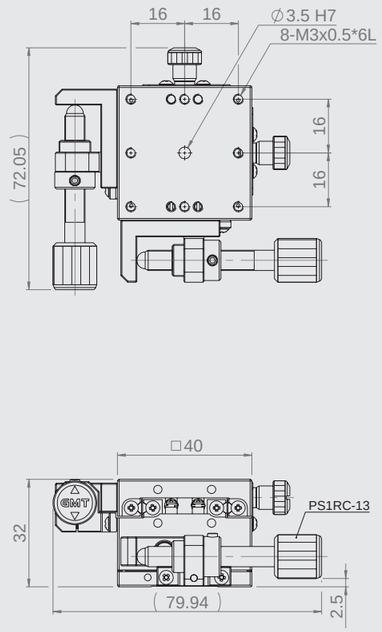

MX50-SC-28

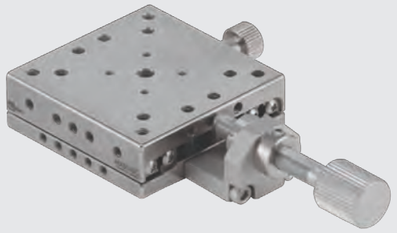

MX50-SS-28

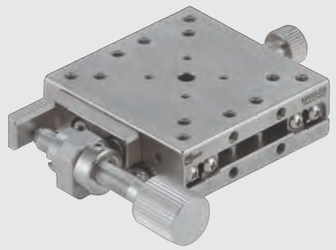

MY50-SC-28

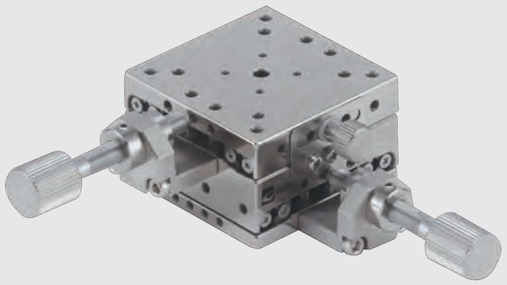

MY50-SS-28

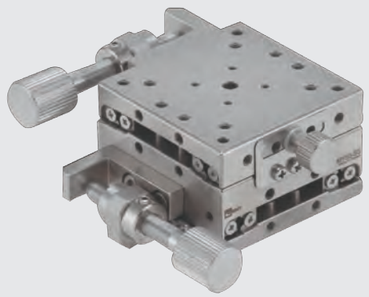

Specification

Unit: mm

Model no.	Table size	Axis	Feed position	Travel stroke	Movement per knob rotation	Straightness accuracy	Allowable Loading (kgf)	Weight kg	Material	Surface finish
MX50-SC-28	50*50	X axis	Central	±6.5	0.5mm	3μm	15	0.28	SUS 440C	Electroless nickel plating
MX50-SS-28			Side							
MY50-SC-28		XY-axis	Central				14.7	0.56		
MY50-SS-28			Side							

MX50-SC-28

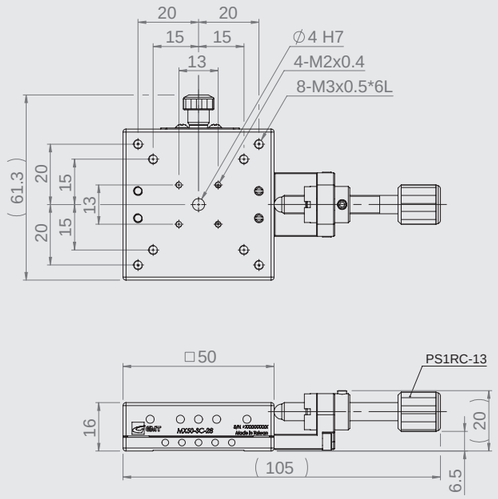

MX50-SS-28

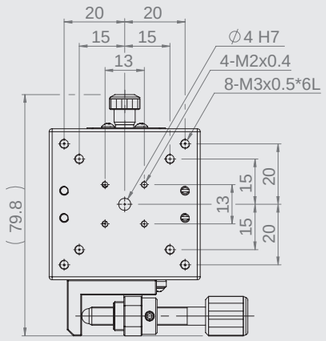

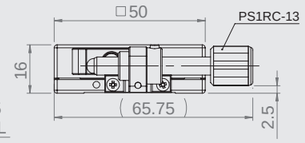

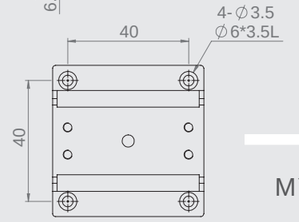

MX(Y)50-S-28
Mounting dimensions

MY50-SC-28

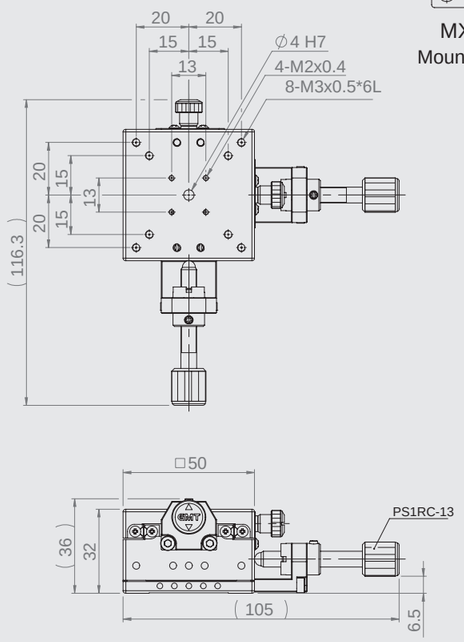

MY50-SS-28

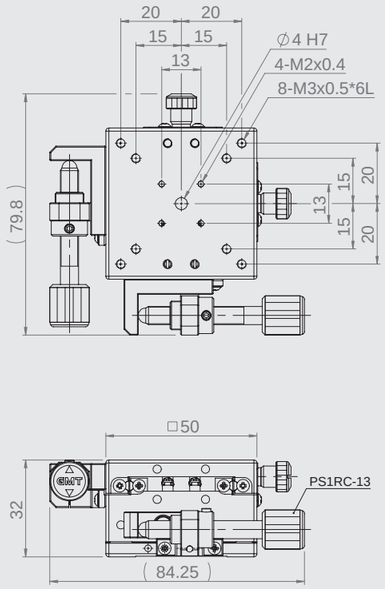

MX60-SC-28

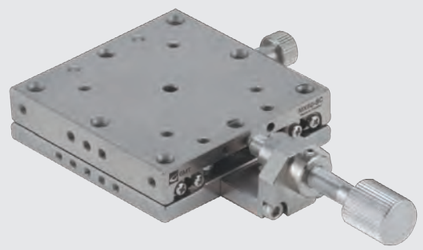

MX60-SS-28

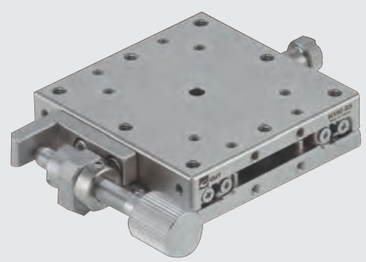

MY60-SC-28

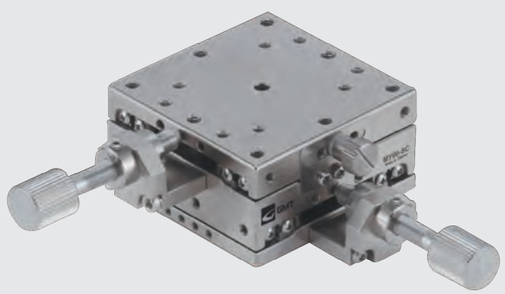

MY60-SS-28

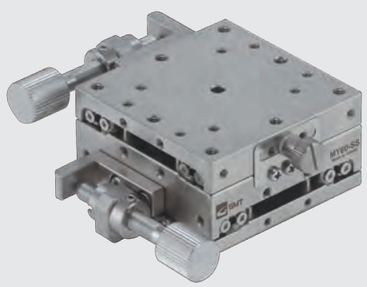

Specification

Unit: mm

Model no.	Table size	Axis	Feed position	Travel stroke	Movement per knob rotation	Straightness accuracy	Allowable Loading (kgf)	Weight kg	Material	Surface finish
MX60-SC-28	60*60	X axis	Central	±6.5	0.5mm	5μm	20	0.4	SUS 440C	Electroless nickel plating
MX60-SS-28			Side							
MY60-SC-28		XY-axis	Central				19.6	0.8		
MY60-SS-28			Side							

Linear ball bearing stages (Feeding screw design) ▶ X axis and XY-axis ▶ Stainless steel
Linear ball bearing stages(Feeding screw design) | 60*60
GMT GLOBAL INC.
Linear ball bearing stages (Feeding screw design)
09*09

MX60-SC-28

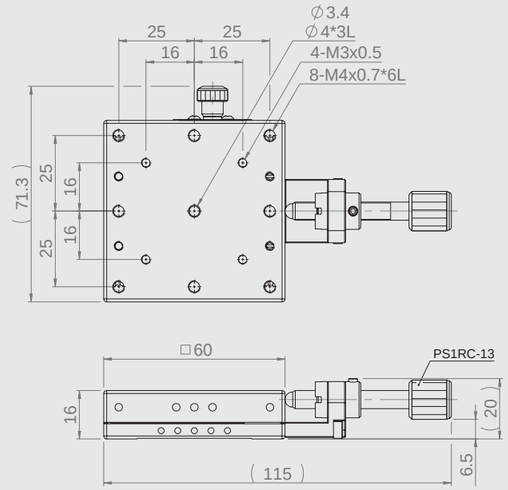

MX60-SS-28

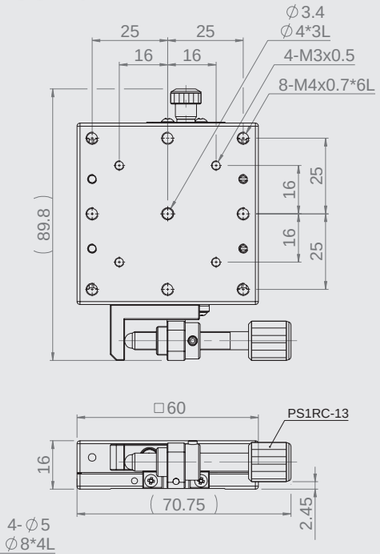

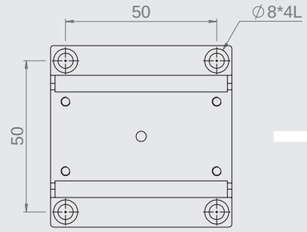

MX(Y)60-S-28
Mounting dimensions

MY60-SC-28

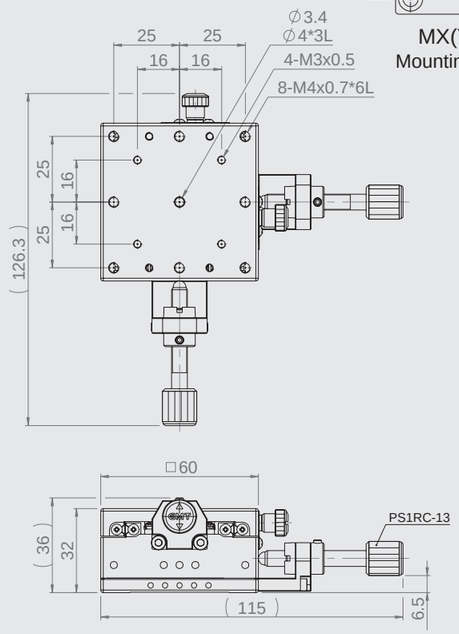

MY60-SS-28

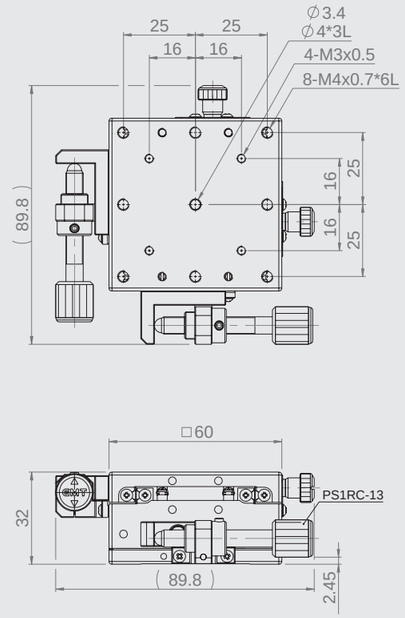

MX70-SC-28

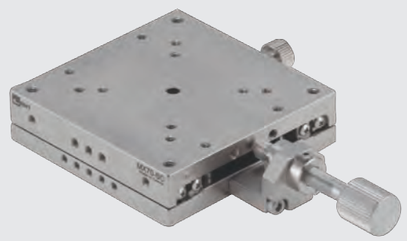

MX70-SS-28

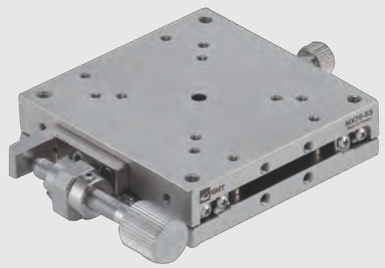

MY70-SC-28

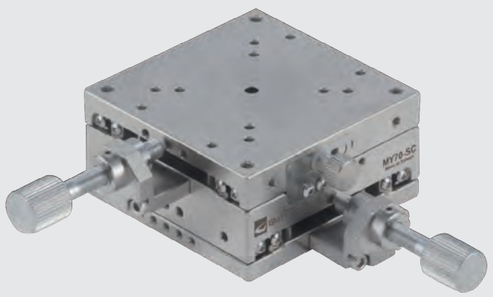

MY70-SS-28

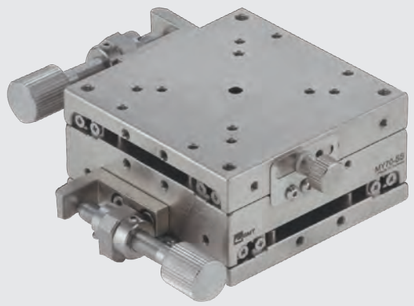

Specification

Unit: mm

Model no.	Table size	Axis	Feed position	Travel stroke	Movement per knob rotation	Straightness accuracy	Allowable Loading (kgf)	Weight kg	Material	Surface finish
MX70-SC-28	70*70	X axis	Central	±6.5	0.5mm	3μm	23	0.58	SUS 440C	Electroless nickel plating
MX70-SS-28			Side							
MY70-SC-28		XY-axis	Central				22.4	1.16		
MY70-SS-28			Side							

MX70-SC-28

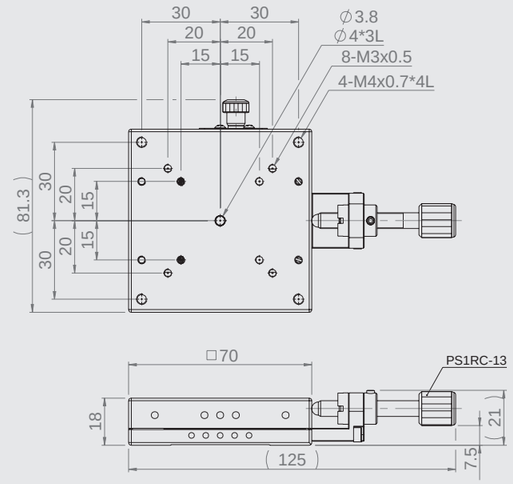

MX70-SS-28

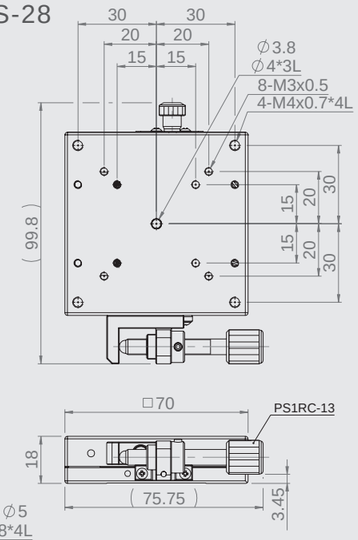

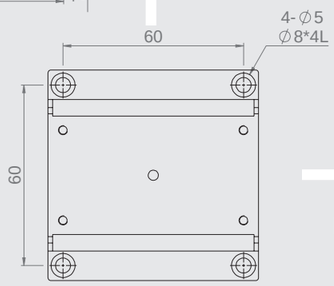

MX(Y)70-S-28
Mounting dimensions

MY70-SC-28

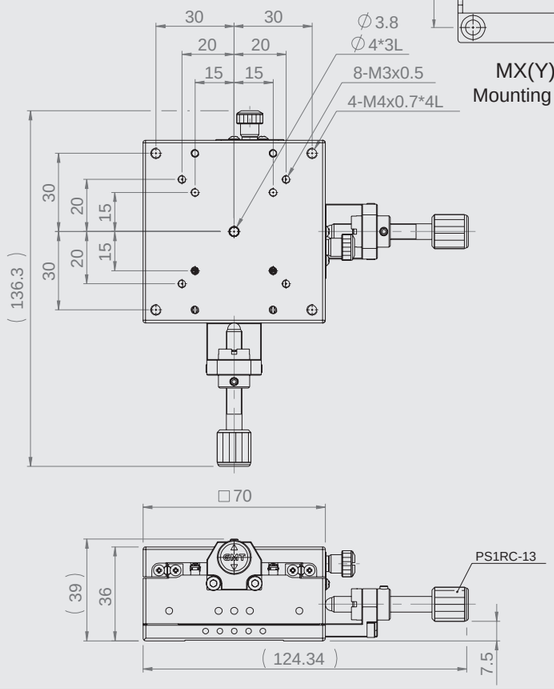

MY70-SS-28

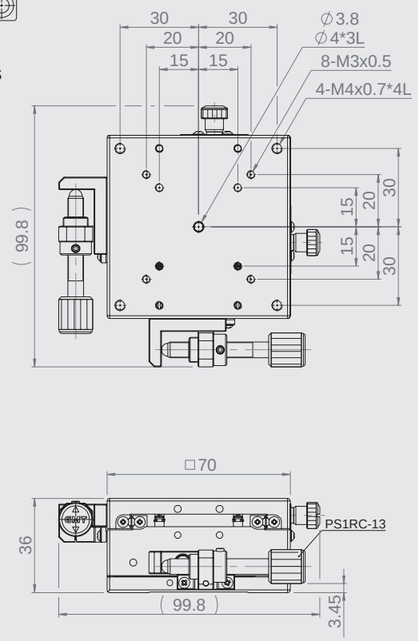

MX80-SC-28

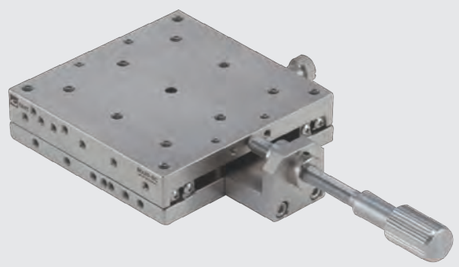

MX80-SS-28

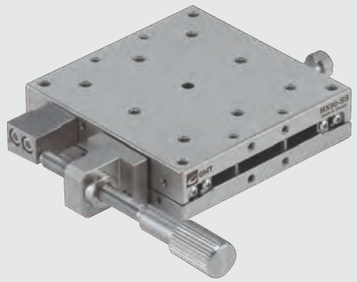

MY80-SC-28

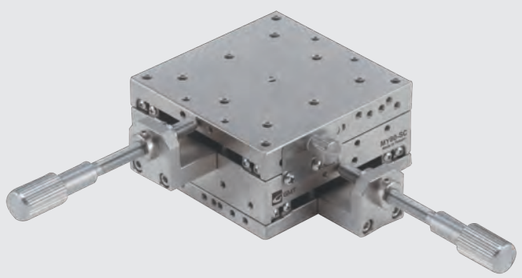

MY80-SS-28

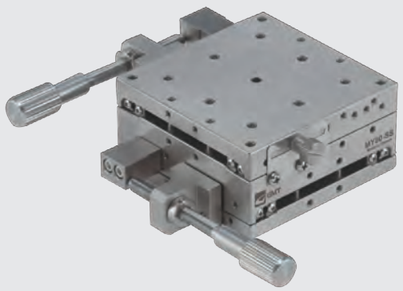

Specification

Unit: mm

Model no.	Table size	Axis	Feed position	Travel stroke	Movement per knob rotation	Straightness accuracy	Allowable Loading (kgf)	Weight kg	Material	Surface finish
MX80-SC-28	80*80	X axis	Central	±12.5	0.5mm	3μm	27	0.9	SUS 440C	Electroless nickel plating
MX80-SS-28			Side							
MY80-SC-28		XY-axis	Central				26.1	1.8		
MY80-SS-28			Side							

MX80-SC-28

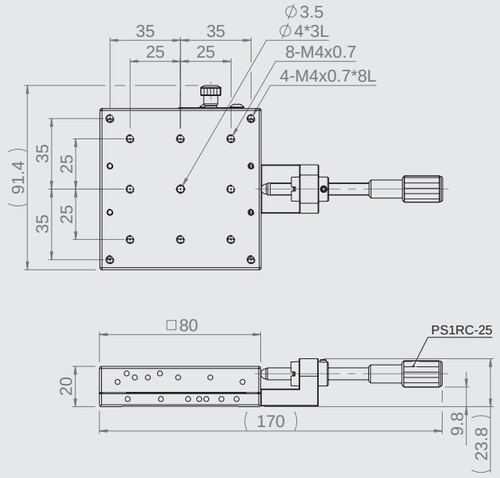

MX80-SS-28

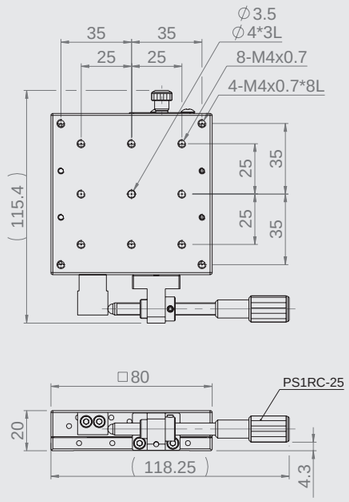

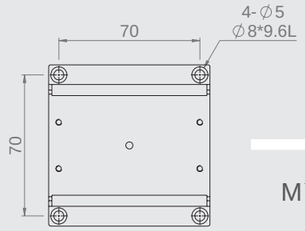

MX(Y)80-S-28
Mounting dimensions

MY80-SC-28

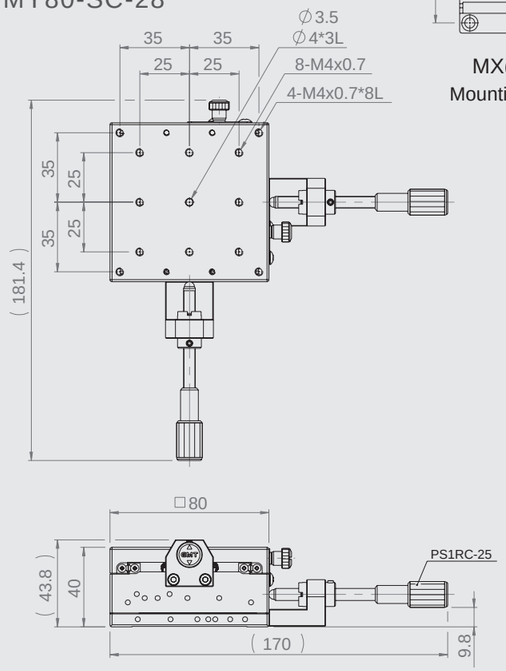

MY80-SS-28

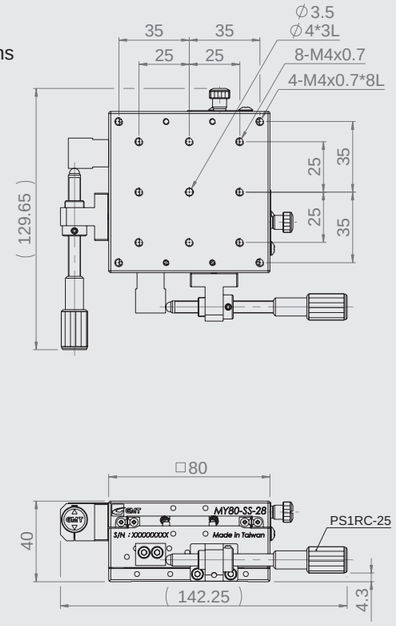

MX100-SC-28

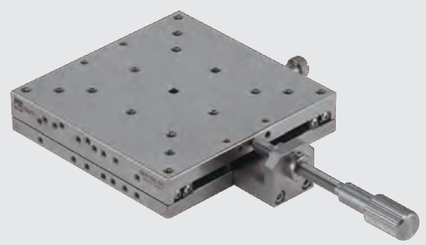

MX100-SS-28

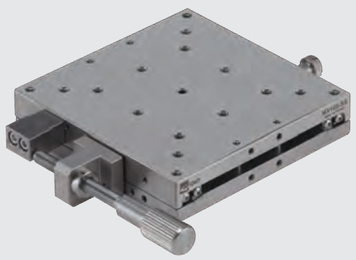

MY100-SC-28

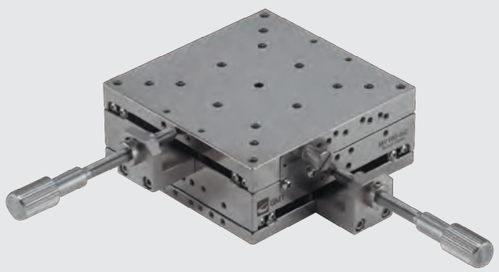

MY100-SS-28

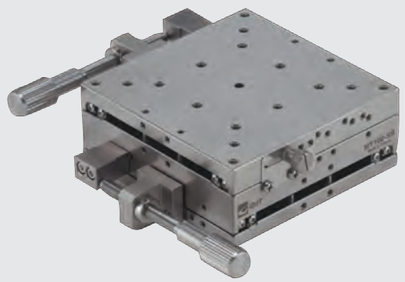

Specification

Unit: mm

Model no.	Table size	Axis	Feed position	Travel stroke	Movement per knob rotation	Straightness accuracy	Allowable Loading (kgf)	Weight kg	Material	Surface finish
MX100-SC-28	100*100	X axis	Central	±12.5	0.5mm	3μm	35	1.33	SUS 440C	Electroless nickel plating
MX100-SS-28			Side							
MY100-SC-28		XY-axis	Central				33.6	2.66		
MY100-SS-28			Side							

MX100-SC-28

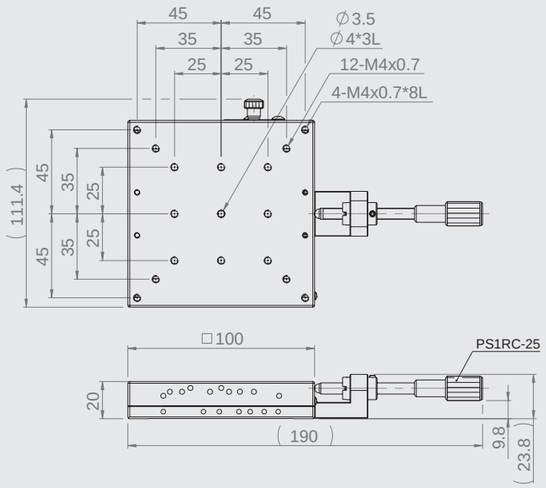

MX100-SS-28

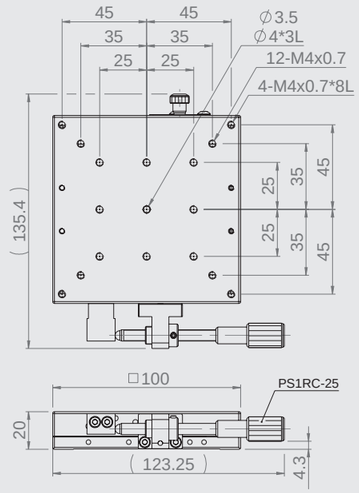

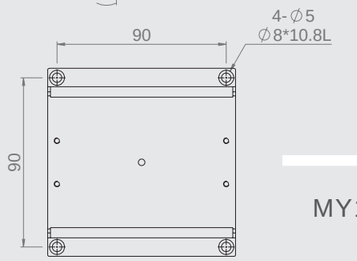

MX(Y)100-S-28
Mounting dimensions

MY100-SC-28

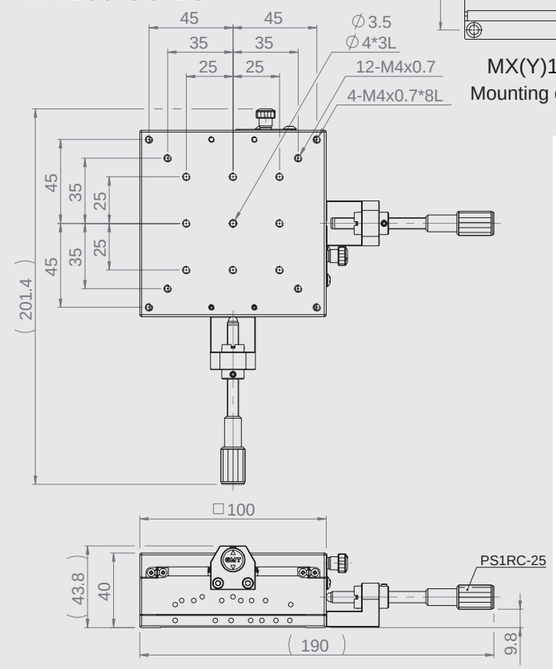

MY100-SS-28

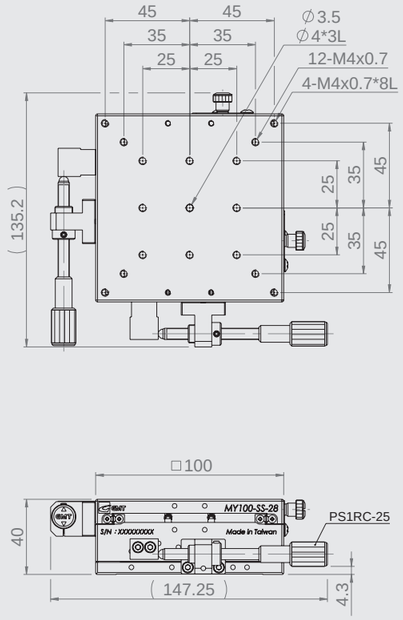

MX60L-SS-28

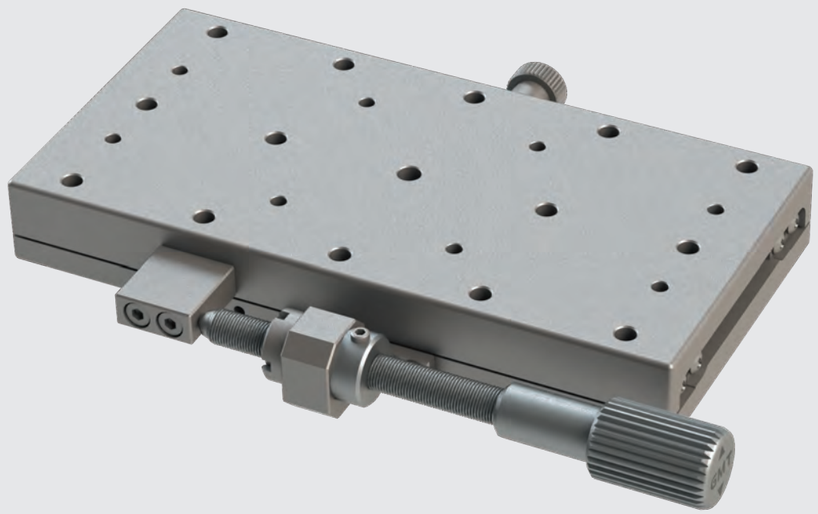

Specification

Unit: mm

Model no.	Table size	Axis	Feed position	Travel stroke	Micrometer minimum reading	Straightness accuracy	Allowable Loading (kgf)	Weight kg	Material	Surface finish
MX60L-SS-28	60*120	X axis	Side	±12.5	10 μm	3 μm	16	0.76	SUS440C	Electroless nickel plating

Linear ball bearing guiding (Feeding screw type) ▶ X axis ▶ Stainless steel
Linear ball bearing guiding(Feeding screw type) | 60*120
GMT GLOBAL INC.
Linear ball bearing guiding (Feeding screw type)
60*120

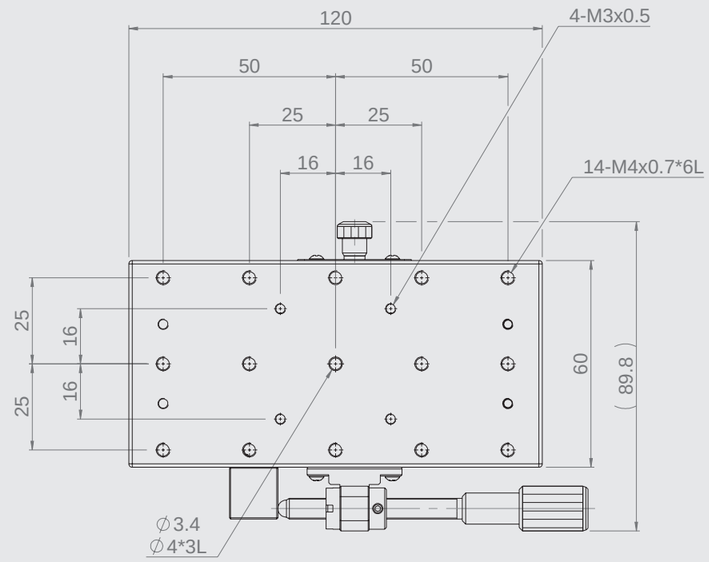

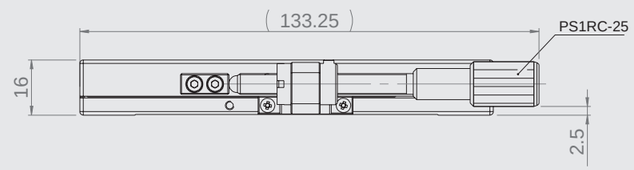

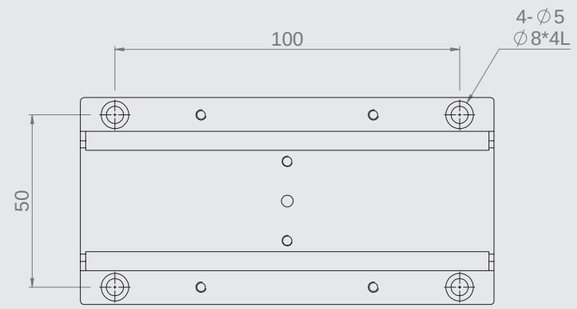

M C 2 A - 60

Transmission	Guide device	Axis	Feeding specification	Stage dimension
M: Manual	C: Dovetail type T: Tilt type M: Magnetic type Z: Horizontal Z axis N: Double bars with single spring NG: Double bars with double springs NE: Double bars	1: X axis 2: XY-axis 3: Z axis 4: X axis+L bracket 5: XZ-axis 6: XYZ-axis	A: Feeding screw B: Rack and pinion C: Rack and pinion with long stroke D: Rack and pinion in simple design E: Feeding screw (Hex. Wrench type) F: Standard micrometer	依目錄規格選擇

M C S - 4 4 W L

Transmission	Guide device	Axis	Dimension	Knob type	Stroke direction
M: Manual	C: Dovetail type	S: X axis D: XY-axis V: Z axis M: XZ-axis T: XY-axis+Z axis		NIL: Single knob W: Double knobs	NIL: Z axis (Up & Down stroke) L: Z axis (Up stroke)

MC1A-60

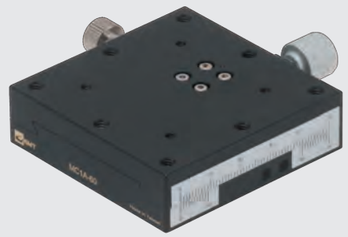

MC1A-25

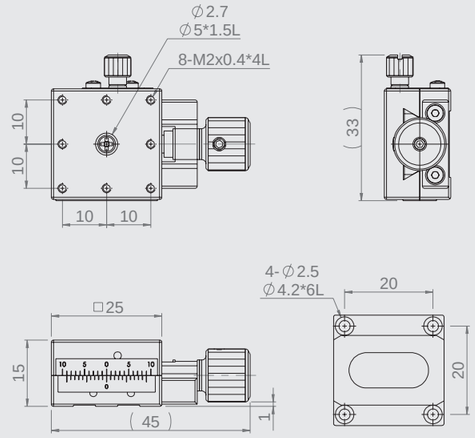

MC1A-40

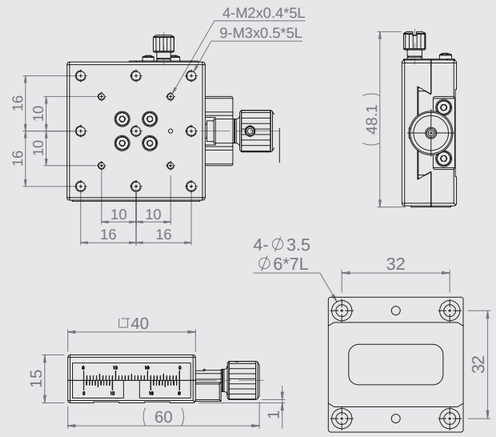

MC1A-60

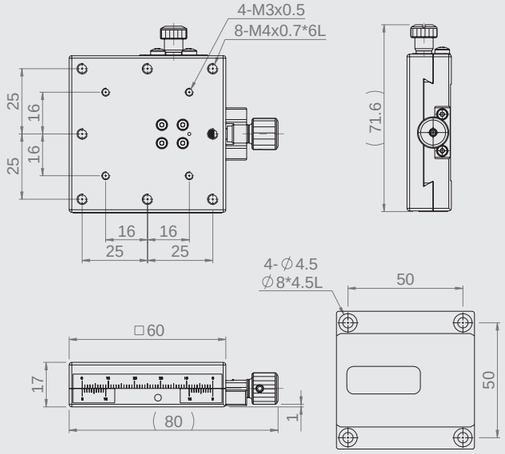

Specification

Unit: mm

Model no.	Table size	Travel stroke	Micrometer minimum reading	Straightness accuracy	Allowable Loading (kgf)	Weight kg	Material	Surface finish
MC1A-25	25*25	±3	0.1 mm / Vernier	30 μm	3.0	0.07	Stage body: Brass Alloy Feeding screw Knob:Aluminum	Black fluororesin finished
MC1A-40	40*40	±7			3.0	0.19		
MC1A-60	60*60	±9			4.0	0.47		

★ One revolution of the feeding screw knob moves 0.5mm stroke.

MC2A-60

MC2A-25

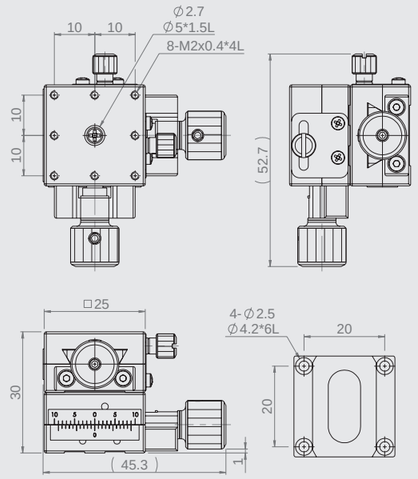

MC2A-40

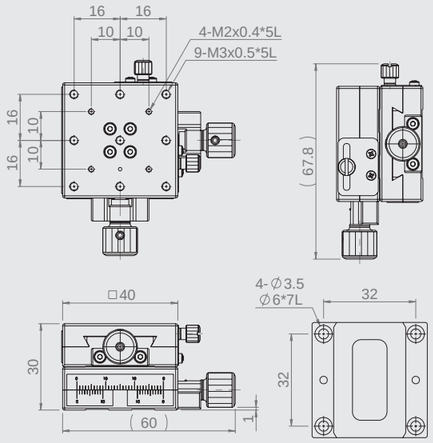

MC2A-60

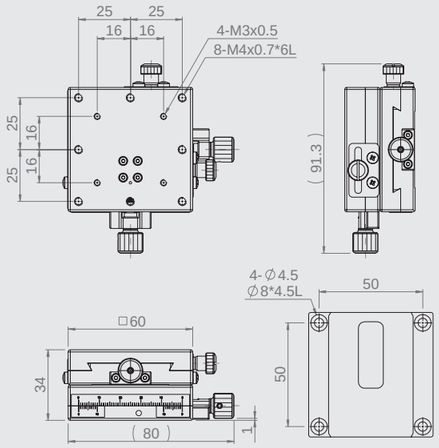

Specification

Unit: mm

Model no.	Table size	Travel stroke	Micrometer minimum reading	Straightness accuracy	Allowable Loading (kgf)	Weight kg	Material	Surface finish
MC2A-25	25*25	±3	0.1 mm / Vernier	30 μm	2.9	0.15	Stage body: Brass Alloy Feeding screw Knob:Aluminum	Black fluororesin finished
MC2A-40	40*40	±7			2.8	0.38		
MC2A-60	60*60	±9			3.4	1.2		

★ One revolution of the feeding screw knob moves 0.5mm stroke.

MC4A-60

MC4A-25

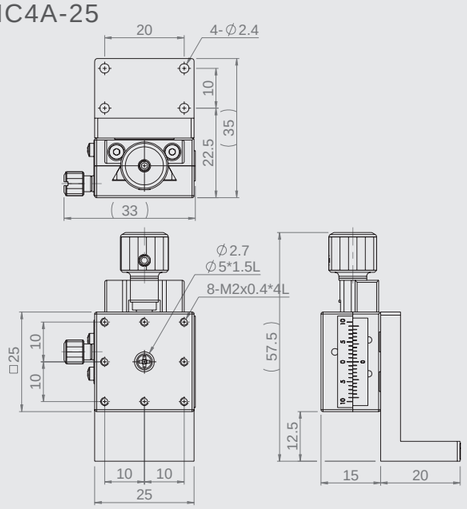

MC4A-40

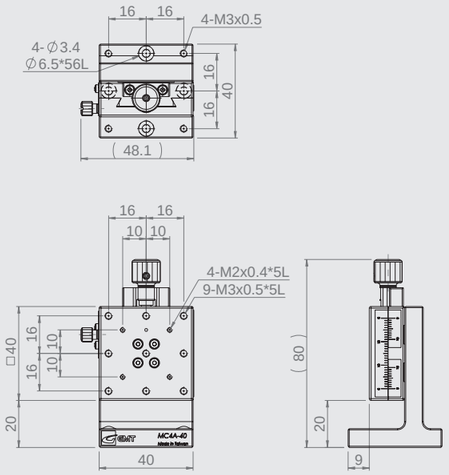

MC4A-60

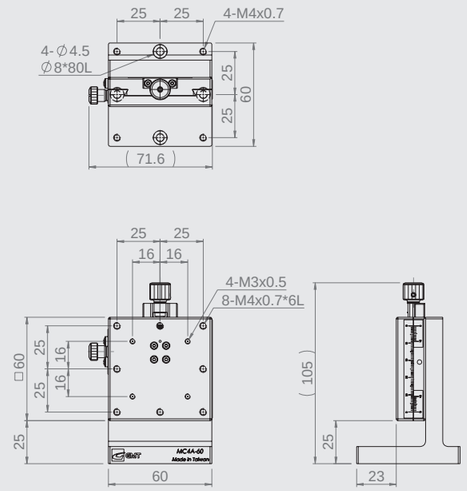

Specification

Unit: mm

Model no.	Table size	Travel stroke	Micrometer minimum reading	Straightness accuracy	Allowable Loading (kgf)	Weight kg	Material	Surface finish
MC4A-25	25*25	±3	0.1 mm / Vernier	30 μm	1.0	0.09	Stage body: Brass Alloy Feeding screw Knob:Aluminum	Black fluororesin finished
MC4A-40	40*40	±7			1.0	0.26		
MC4A-60	60*60	±9			2.0	0.75		

★ One revolution of the feeding screw knob moves 0.5mm stroke.

MC1A-A40

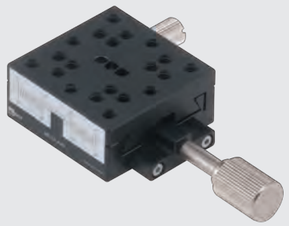

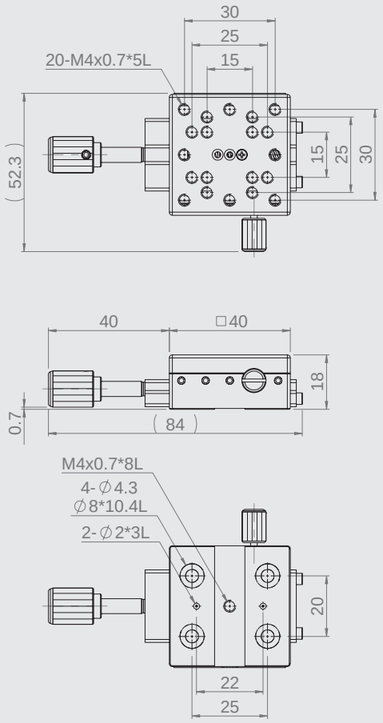

MC1A-A60

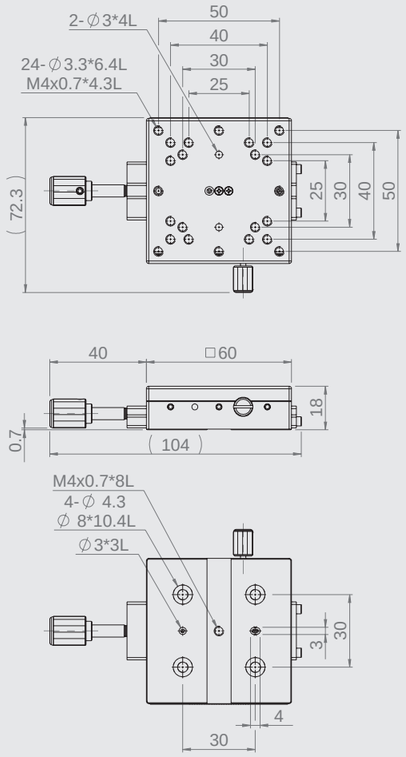

Specification

Unit: mm

Model no.	Table size	Axis	Feed position	Travel stroke	Minimum reading	Straightness accuracy	Allowable Loading (kgf)	Weight kg	Material	Surface finish
MC1A-A40	40*40	X axis	Central	± 11	0.1mm/ Vernier	30 μm	2	0.10	Aluminum alloy	Black anodized
MC1A-A60	60*60			± 21			3	0.19		

MC4A-A60

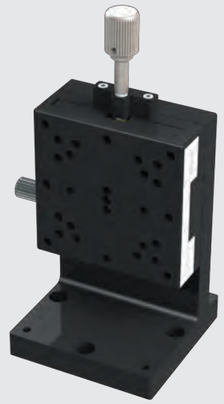

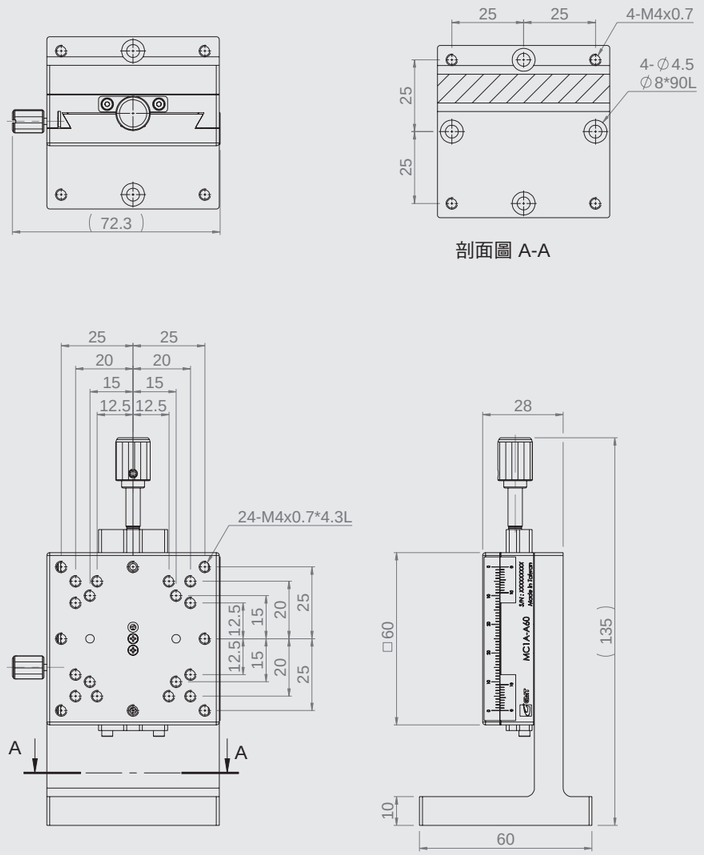

Specification

Unit: mm

Model no.	Table size	Axis	Feed position	Travel stroke	Movement per knob rotation	Minimum reading	Straightness accuracy	Allowable Loading (kgf)	Weight kg	Material	Surface finish
MC4A-A60	60*60	Z-axis	Central	±21	4.2	0.1 mm / Vernier	30 μm	2.1	0.42	Aluminum alloy	Black anodized

MC1A-60CL

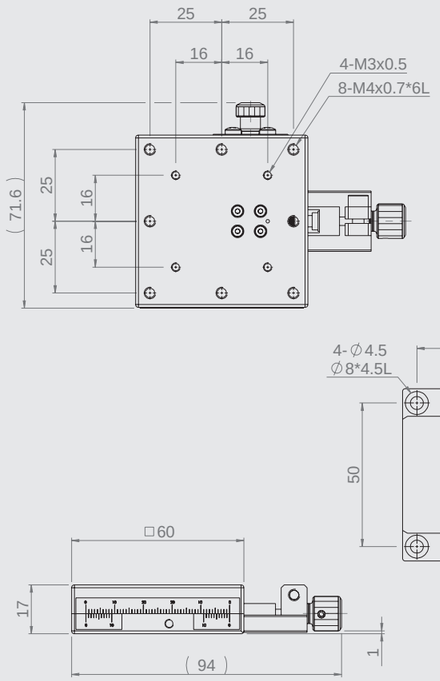

MC2A-60CL

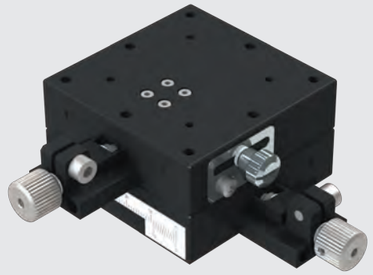

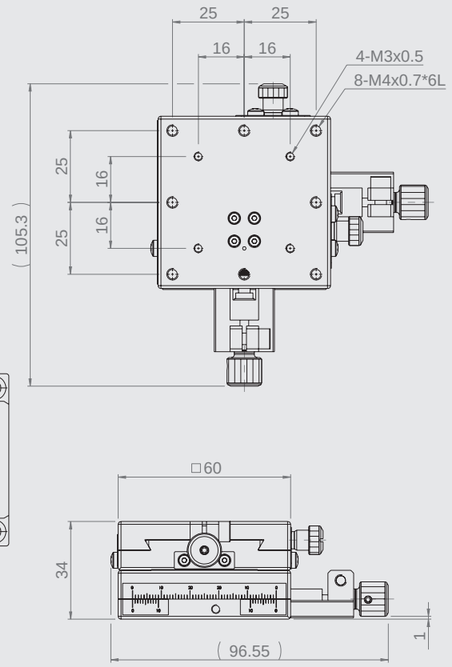

Specification

Unit: mm

Model no.	Table size	Axis	Feed position	Travel stroke	Movement per knob rotation	Minimum reading	Straightness accuracy	Allowable Loading (kgf)	Weight kg	Material	Surface finish
MC1A-60CL	60*60	X axis	Central	±9	0.5	0.1 mm / Vernier	30 μm	4	0.47	Stage body: Brass Alloy Feeding screw Knob:Aluminum	Black fluororesin finished
MC2A-60CL		XY-axis						3.4	0.98		

MC1A-46L

MC1A-46L

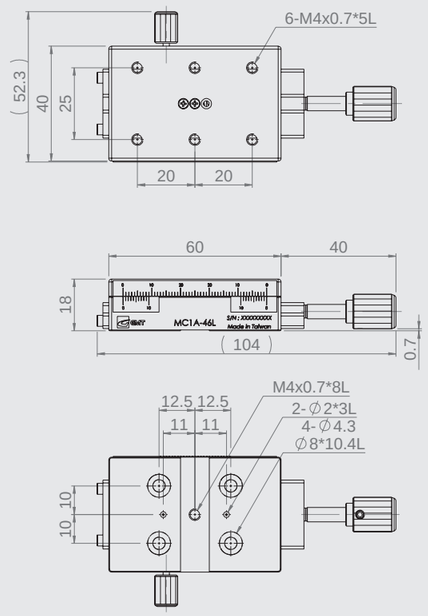

MC1A-49L

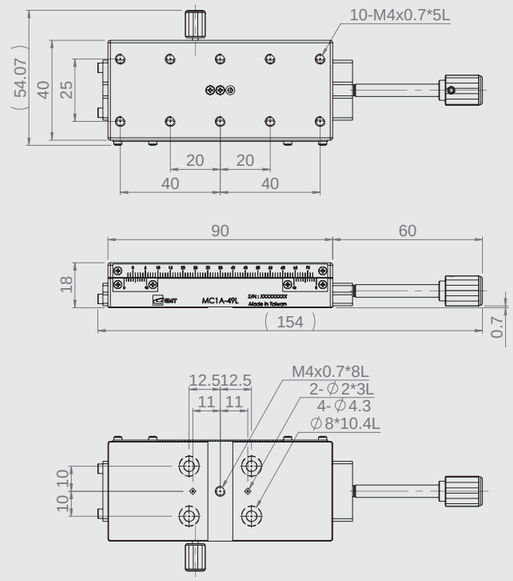

Specification

Unit: mm

Model no.	Table size	Axis	Feed position	Travel stroke	Minimum reading	Straightness accuracy	Allowable Loading (kgf)	Weight kg	Material	Surface finish
MC1A-46L	40*40	X axis	Central	± 21	0.1mm/ Vernier	30 μm	3	0.14	Aluminum alloy	Black anodized
MC1A-49L	40*90			± 35			3	0.19		

Dovetail guiding ▶ X axis ▶ Feeding screw / clamping type

Dovetail stage | X axis | Lead:4.2mm

MC1A-46C

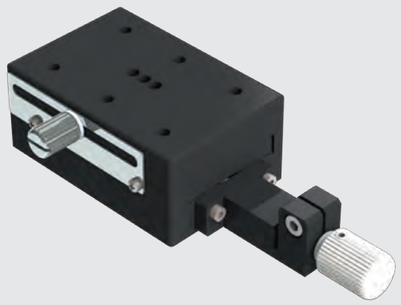

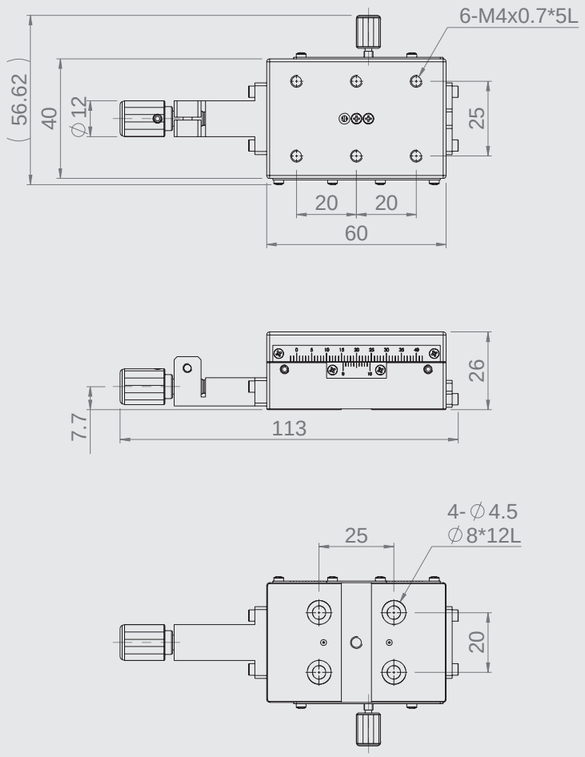

Specification

Unit: mm

Model no.	Table size	Axis	Feed position	Travel stroke	Minimum reading	Straightness accuracy	Dynamic Straightness accuracy	Dynamic Parallel	Horizontal/ Vertical loading (kgf)	Weight kg	Material	Surface finish
MC1A-46C	40*60	X axis	Central	±21 mm	0.1 mm / Vernier	0.01 mm	0.03 mm	0.03 mm	4 / 2	0.19	Aluminum alloy	Black anodized

Dovetail guiding ▶ X axis ▶ Feeding screw type

Dovetail stage | X axis | Lead:4.2mm

MC1A-46S

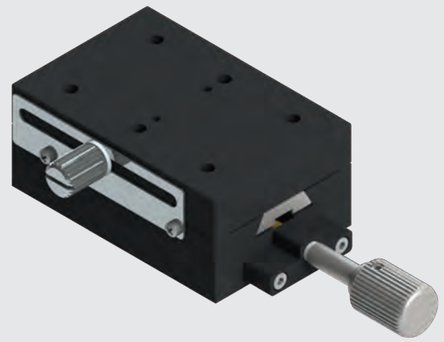

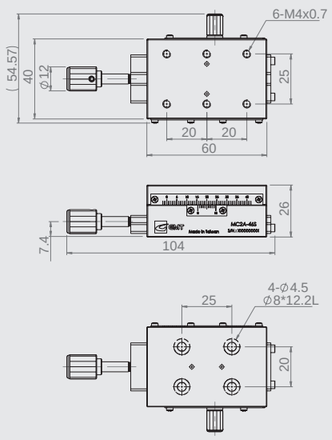

MC1A-49S

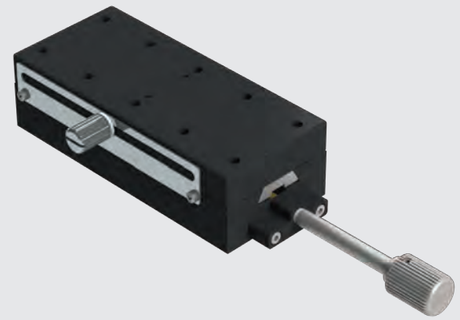

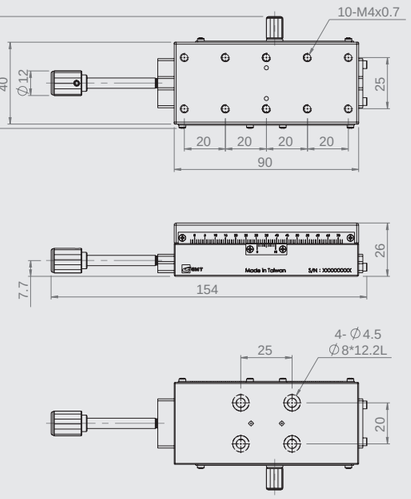

Specification

Unit: mm

Model no.	Table size	Axis	Feed position	Travel stroke	Minimum reading	Straightness accuracy	Dynamic Straightness accuracy	Dynamic Parallel	Horizontal/ Vertical loading (kgf)	Weight kg	Material	Surface finish
MC1A-46S	40*60	X axis	Central	±21 mm	0.1 mm / Vernier	0.03 mm	0.03 mm	0.03 mm	4 / 2	0.19	Aluminum alloy	Black anodized
MC1A-49S	40*90			±35 mm						0.29		

Dovetail guiding ▶ XY-axis ▶ Feeding screw type

Dovetail stage | XY-axis | Lead:4.2mm

MC2A-46S

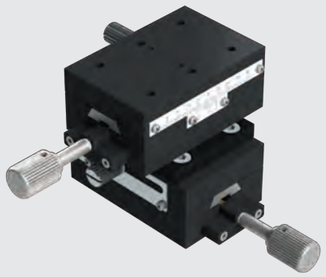

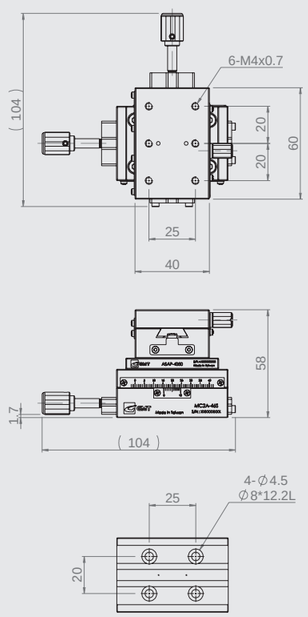

MC2A-49S

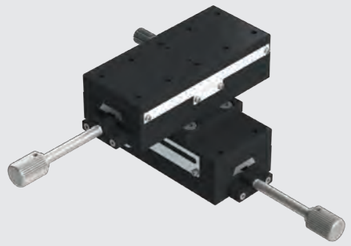

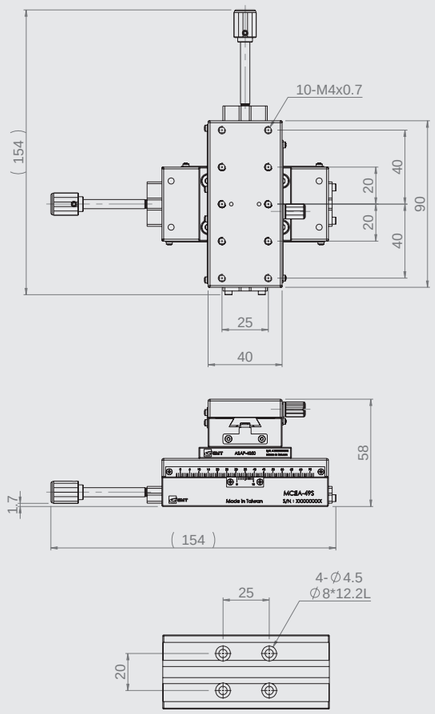

Specification

Unit: mm

Model no.	Table size	Axis	Feed position	Travel stroke	Movement per knob rotation	Minimum reading	Straightness accuracy	Allowable Loading (kgf)	Weight kg	Material	Surface finish
MC2A-46S	40*60	XY-axis	Central	±21	4.2	0.1 mm / Vernier	30 μm	3.8	0.43	Aluminum alloy	Black anodized
MC2A-49S	40*90			±35				3.72	0.62		

Dovetail guiding ▶ Z-axis ▶ Feeding screw type

Dovetail stage | Z-axis | Lead:4.2mm

MC4A-49S

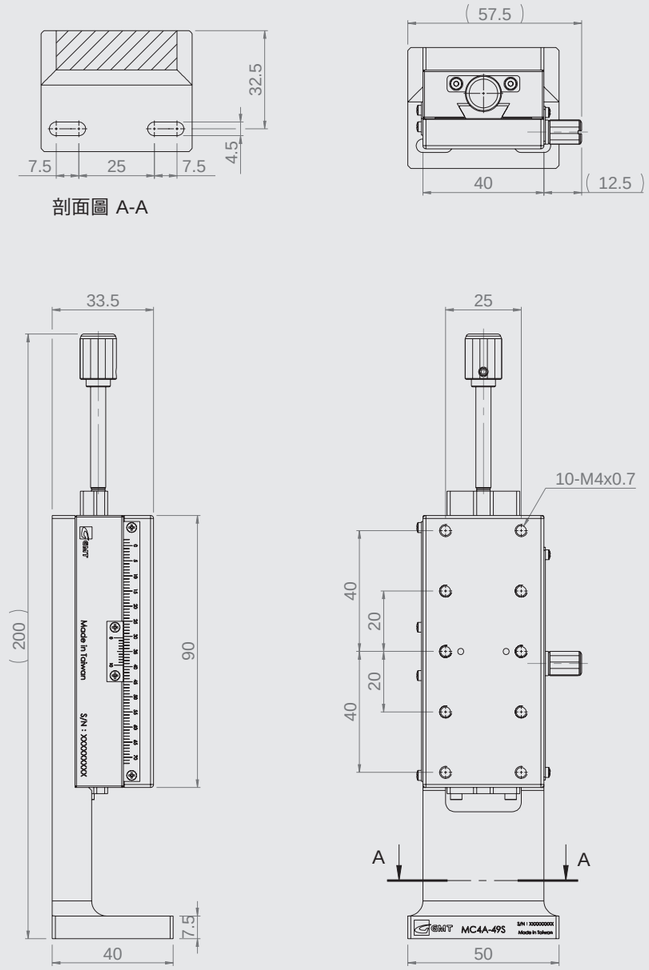

Specification

Unit: mm

Model no.	Table size	Axis	Feed position	Travel stroke	Movement per knob rotation	Minimum reading	Straightness accuracy	Allowable Loading (kgf)	Weight kg	Material	Surface finish
MC4A-49S	40*90	Z-axis	Central	±35	4.2	0.1 mm / Vernier	30 μm	2	0.46	Aluminum alloy	Black anodized

MC1A-425

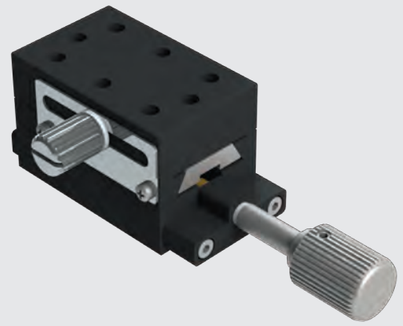

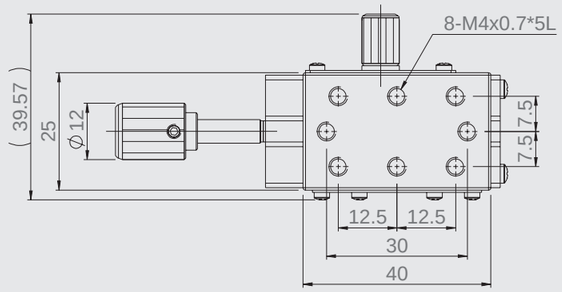

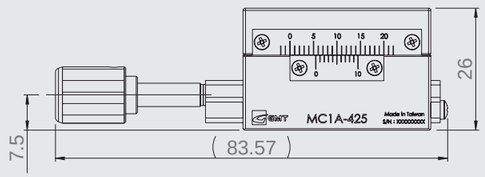

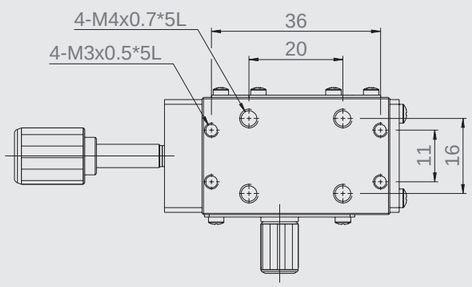

Specification

Unit: mm

Model no.	Table size	Axis	Feed position	Travel stroke	Minimum reading	Straightness accuracy	Dynamic Straightness accuracy	Dynamic Parallel	Horizontal/ Vertical loading (kgf)	Weight kg	Material	Surface finish
MC1A-425	25*40	X axis	Central	±12 mm	0.1 mm / Vernier	0.01 mm	0.02 mm	0.03 mm	3 / 1.5	0.09	Aluminum alloy	Black anodized

MC1AL-40

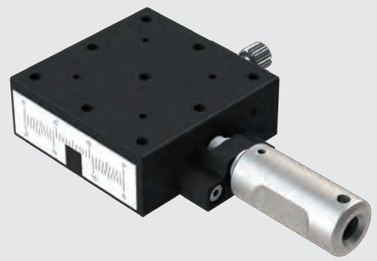

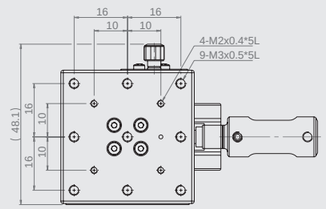

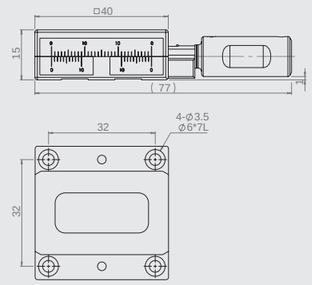

MC4AL-40

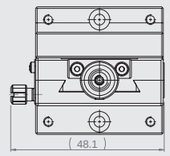

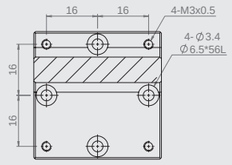

剖面圖 A-A

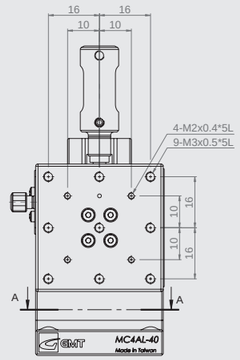

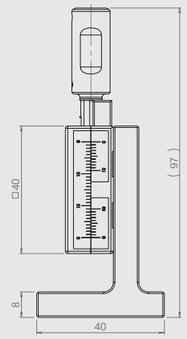

Specification

Unit: mm

Model no.	Table size	Axis	Feed position	Travel stroke	Movement per knob rotation	Minimum reading	Straightness accuracy	Allowable Loading (kgf)	Weight kg	Material	Surface finish
MC1AL-40	40*40	X axis	Central	±7	0.5	0.1 mm / Vernier	30 μm	3	0.2	Stage body: Brass Alloy Feeding screw Knob:Aluminum	Black fluororesin finished
MC4AL-40		Z-axis						2.1	0.28		

MC1A-48KM

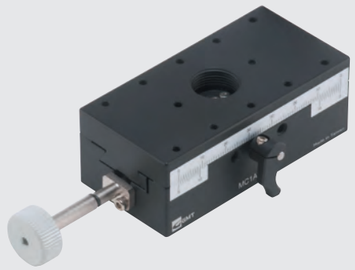

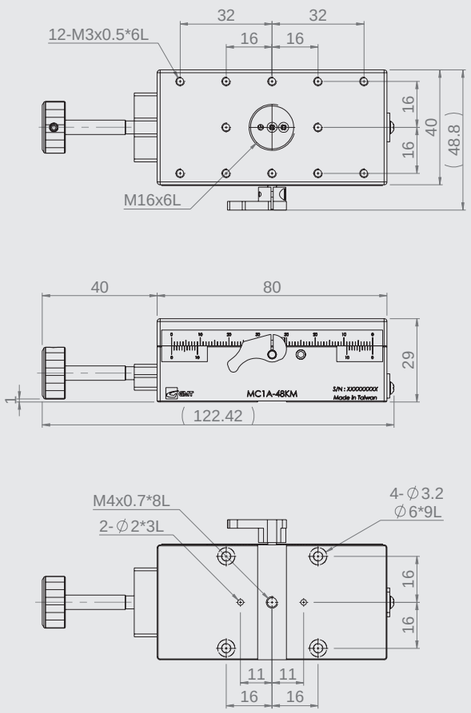

MC1A-48KMR

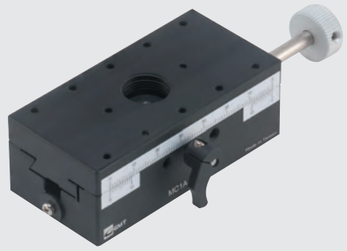

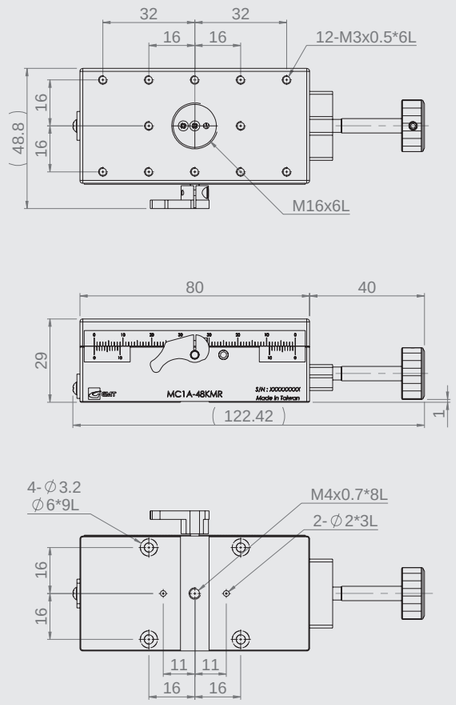

Specification

Unit: mm

Model no.	Table size	Axis	Feed position	Travel stroke	Minimum reading	Straightness accuracy	Allowable Loading (kgf)	Weight kg	Material	Surface finish
MC1A-48KM/R	40*80	X axis	Central	± 30	0.1mm/ Vernier	30 μm	4	0.31	Aluminum alloy	Black anodized

MC1B-40

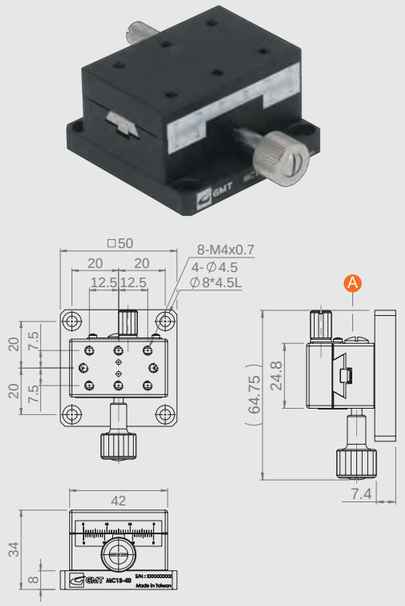

MC1B-60

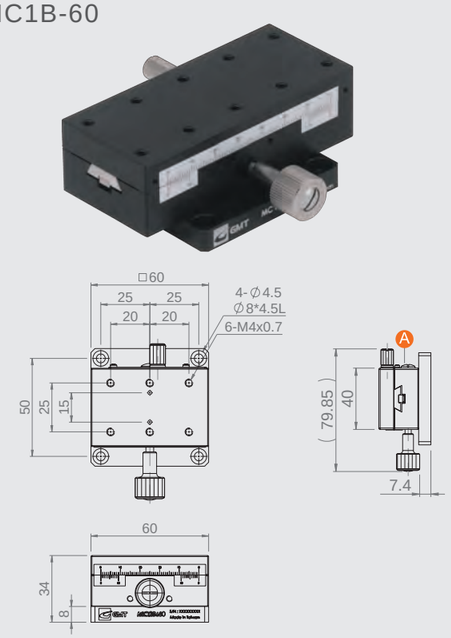

MC1B-90

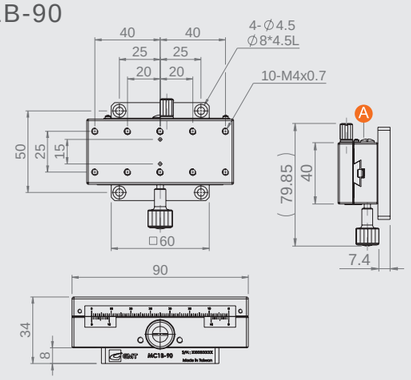

MC1B-140

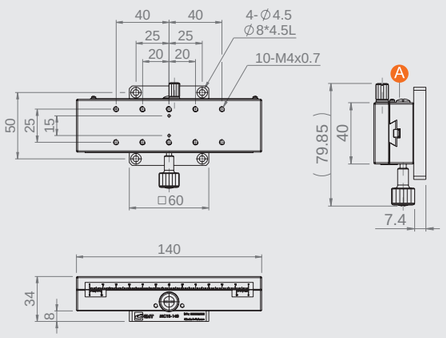

★ Use slotted-driver to lock Ⓐ clockwise to moderate sliding,rotating anti-clockwise to accerate sliding smoothly.

Specification

Unit: mm

Model no.	Table size	Travel stroke	Minimum reading	Straightness accuracy	Allowable Loading (kgf)	Weight kg	Material	Surface finish
MC1B-40	24.8*42	±12	0.1 mm / Vernier	30 μm	3.0	0.17	Aluminum alloy	Black anodized
MC1B-60	40*60	±21			4.0	0.29		
MC1B-90	40*90	±35				0.40		
MC1B-140	40*140	±60				0.56		

★ One revolution of the screw knob moves 18mm stroke.

MC2B-40

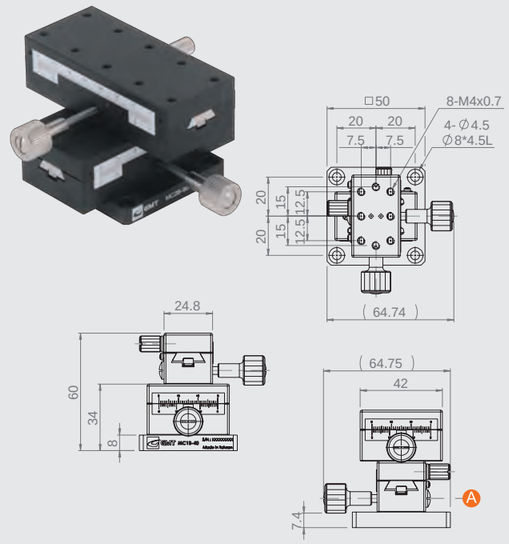

MC2B-60

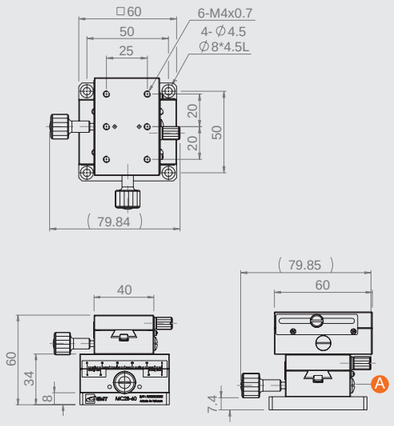

MC2B-90

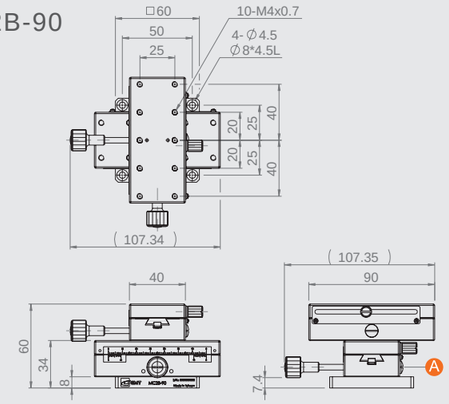

MC2B-140

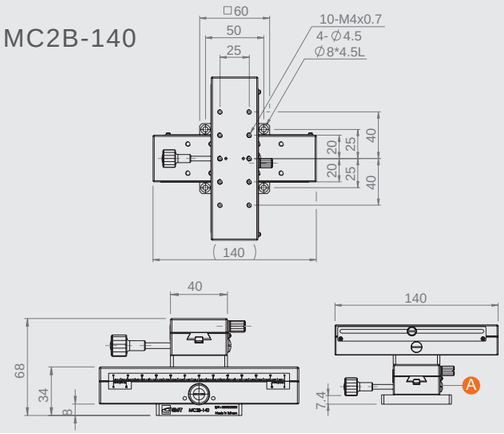

★ Use slotted-driver to lock Ⓐ clockwise to moderate sliding,rotating anti-clockwise to accerate sliding smoothly.
★ 照片產品為MC2B-90。

Specification

Unit: mm

Model no.	Table size	Travel stroke	Minimum reading	Straightness accuracy	Allowable Loading (kgf)	Weight kg	Material	Surface finish
MC2B-40	24.8*42	±12	0.1 mm / Vernier	30 μm	2.5	0.29	Aluminum alloy	Black anodized
MC2B-60	40*60	±21			3.5	0.51		
MC2B-90	40*90	±35				0.73		
MC2B-140	40*140	±60				1.08		

★ One revolution of the screw knob moves 18mm stroke.

MC4B-40

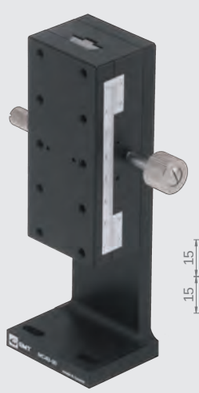

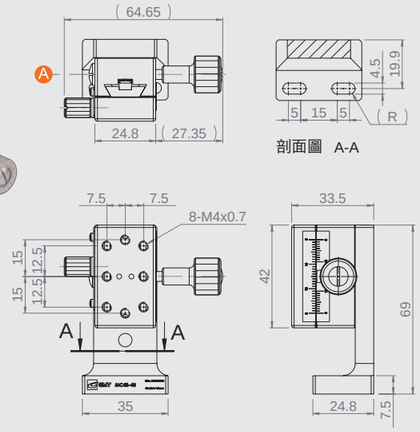

MC4B-60

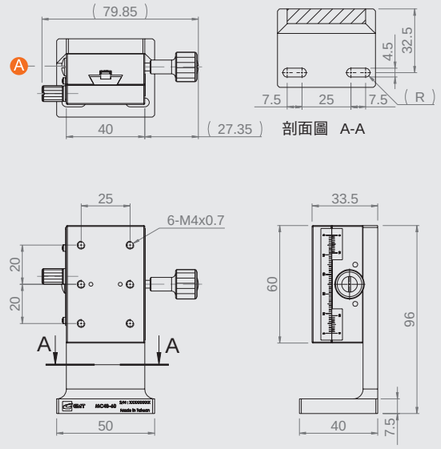

MC4B-90

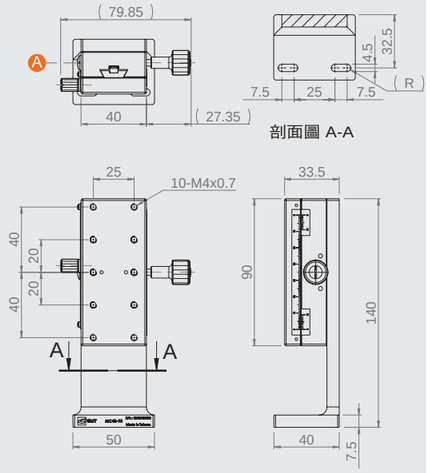

MC4B-140

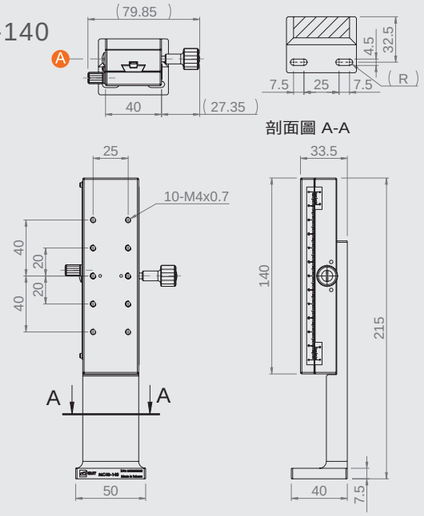

★ Use slotted-driver to lock Ⓐ clockwise to moderate sliding,rotating anti-clockwise to accerate sliding smoothly.

★ 照片產品為MC4B-90。

Specification

Unit: mm

Model no.	Table size	Travel stroke	Minimum reading	Straightness accuracy	Allowable Loading (kgf)	Weight kg	Material	Surface finish
MC4B-40	24.8*42	±12	0.1 mm / Vernier	30 μm	1.5	0.17	Aluminum alloy	Black anodized
MC4B-60	40*60	±21			2.0	0.33		
MC4B-90	40*90	±35				0.45		
MC4B-140	40*140	±60				0.68		

★ One revolution of the screw knob moves 18mm stroke.

MC1B-60F

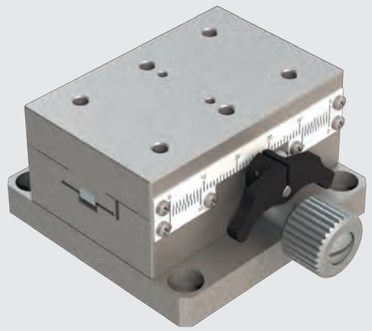

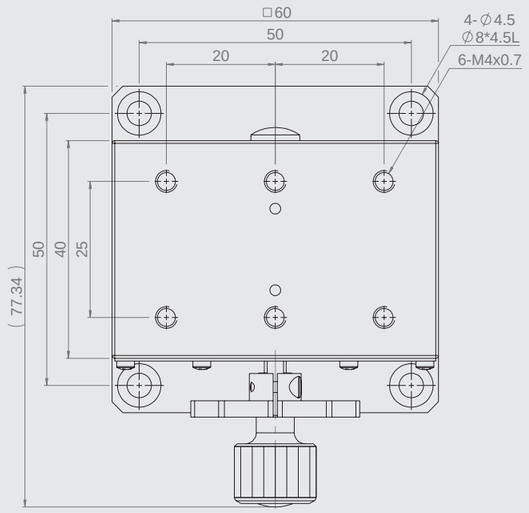

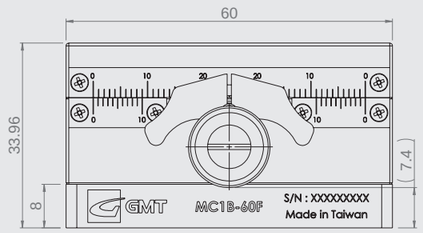

Specification

Unit: mm

Model no.	Table size	Travel stroke	Minimum reading	Straightness accuracy	Allowable Loading (kgf)	Weight kg	Material	Surface finish
MC1B-60F	40*60	±21	0.1 mm / Vernier	40 μm	20	1.6	Carbon Steel	Electro-less nickel plating

★ One revolution of the screw knob moves 18mm stroke.

MC1C-50/70

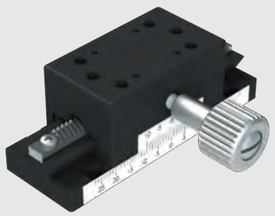

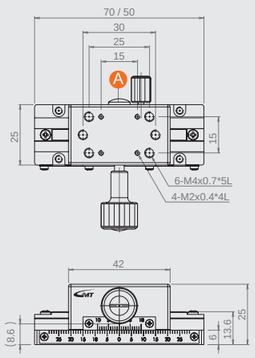

【MC1C-70】

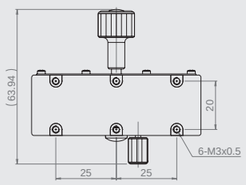

【MC1C-50】

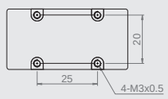

MC1C-100

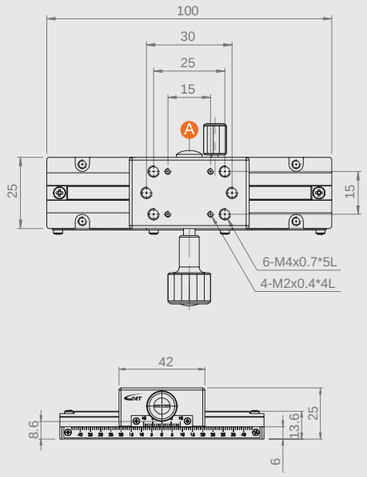

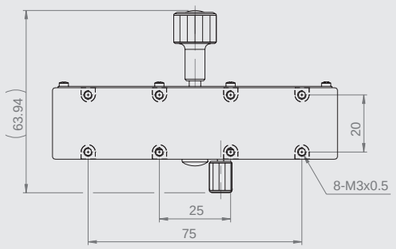

★ Above assembly used by M2 screw, Base assembly used by M3 screw.

★ Use slotted-driver to lock Ⓐ clockwise to moderate sliding,rotating anti-clockwise to accerate sliding smoothly.

Specification

Unit: mm

Model no.	Table size	Travel stroke	Minimum reading	Straightness accuracy	Allowable Loading (kgf)	Weight kg	Material	Surface finish
MC1C-50	50	±15	0.1 mm / Vernier	30 μm	3.0	0.12	Aluminum alloy	Black anodized
MC1C-70	70	±25		30 μm				
MC1C-100	100	±40		30 μm		0.14		

★ One revolution of the screw knob moves 18mm stroke.

MC1C-150

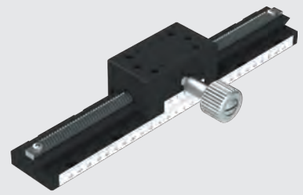

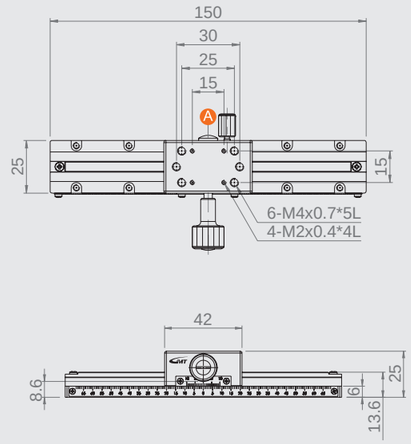

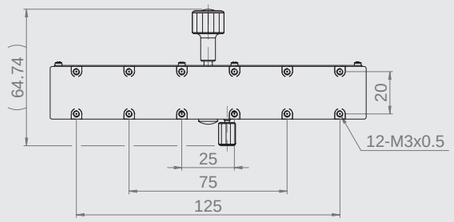

MC1C-200/250

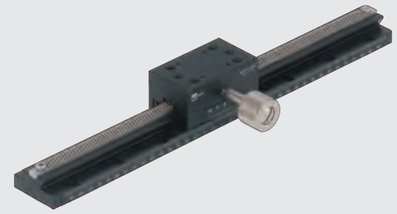

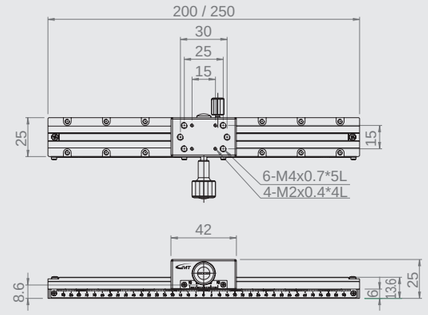

【MC1C-200】

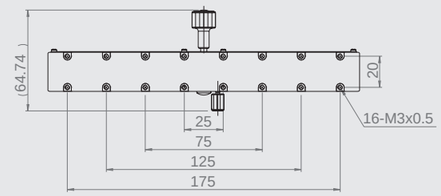

【MC1C-250】

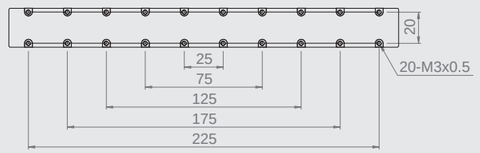

★ Above assembly used by M2 screw, Base assembly used by M3 screw.

★ Use slotted-driver to lock Ⓐ clockwise to moderate sliding,rotating anti-clockwise to accerate sliding smoothly.

Specification

Unit: mm

Model no.	Table size	Travel stroke	Minimum reading	Straightness accuracy	Allowable Loading (kgf)	Weight kg	Material	Surface finish
MC1C-150	150	±65	0.1 mm / Vernier	40 μm	3.0	0.17	Aluminum alloy	Black anodized
MC1C-200	200	±90		50 μm		0.21		
MC1C-250	250	±115				0.36		

★ One revolution of the screw knob moves 18mm stroke.

MC1C-150-2

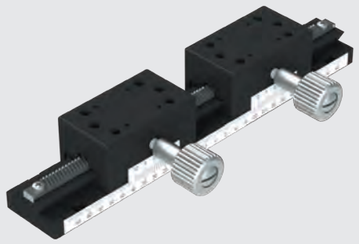

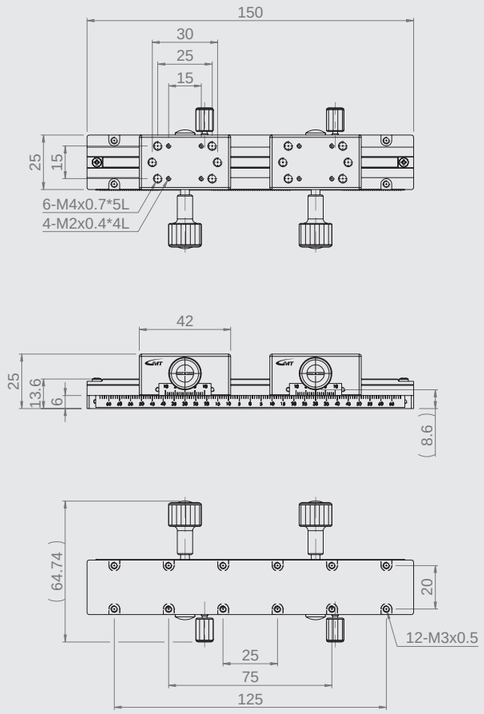

MC1C-200-2

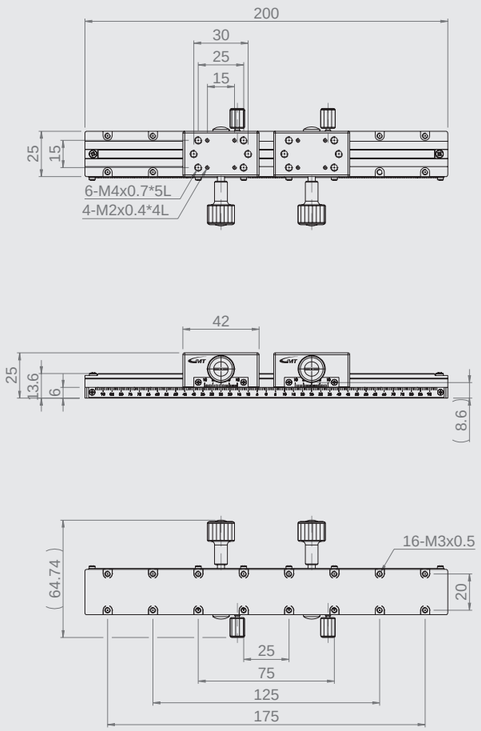

Specification

Unit: mm

Model no.	Table size	Axis	Travel stroke	Movement per knob rotation	Minimum reading	Straightness accuracy	Allowable Loading (kgf)	Weight kg	Material	Surface finish	Remarks
MC1C-150-2	150	X axis	±20	18	0.1 mm / Vernier	40 μm	3	0.24	Aluminum alloy	Black anodized	Two slide blocks
MC1C-200-2	200		±37			50 μm		0.28			

MC1C-300-2

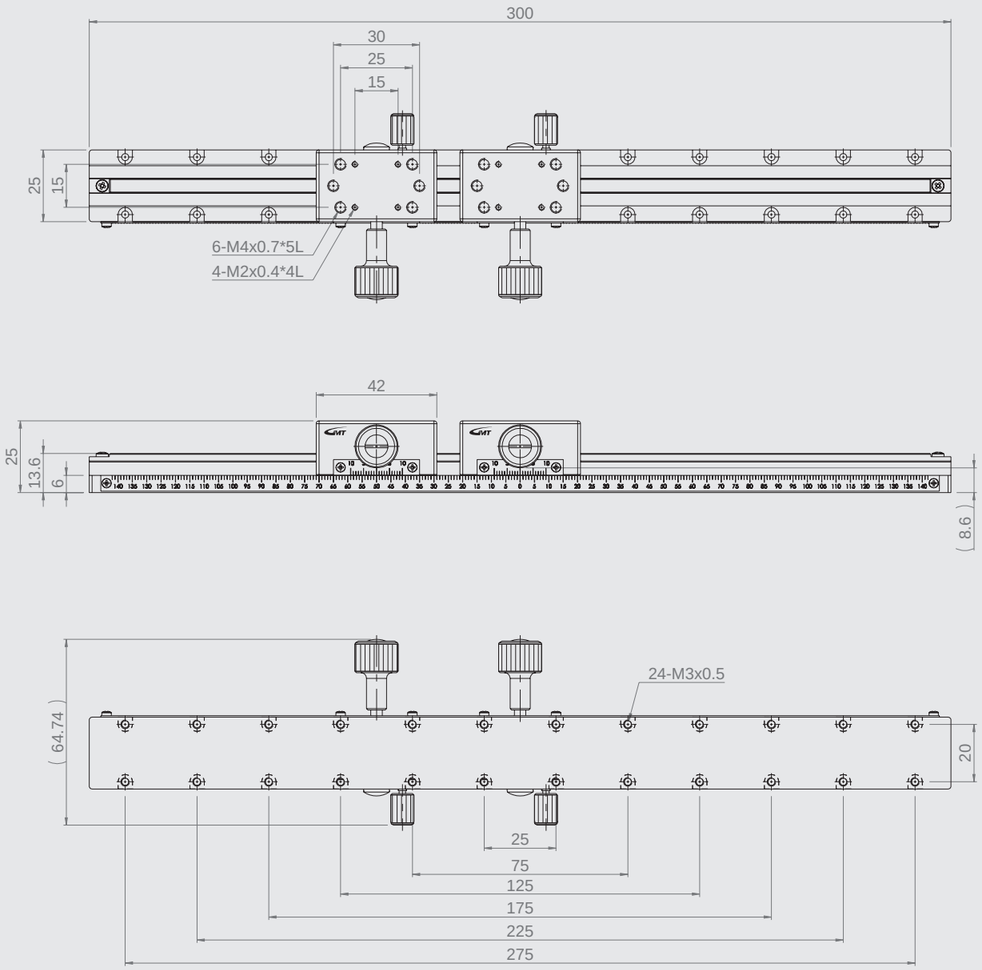

Specification

Unit: mm

Model no.	Table size	Axis	Travel stroke	Movement per knob rotation	Minimum reading	Straightness accuracy	Allowable Loading (kgf)	Weight kg	Material	Surface finish	Remarks
MC1C-300-2	300	X axis	±70	18	0.1 mm / Vernier	70 μm	3	0.35	Aluminum alloy	Black anodized	Two slide blocks

MC3C-100

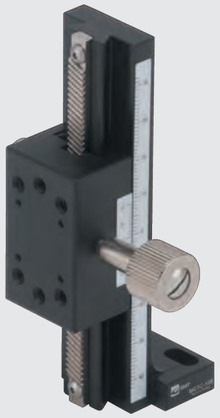

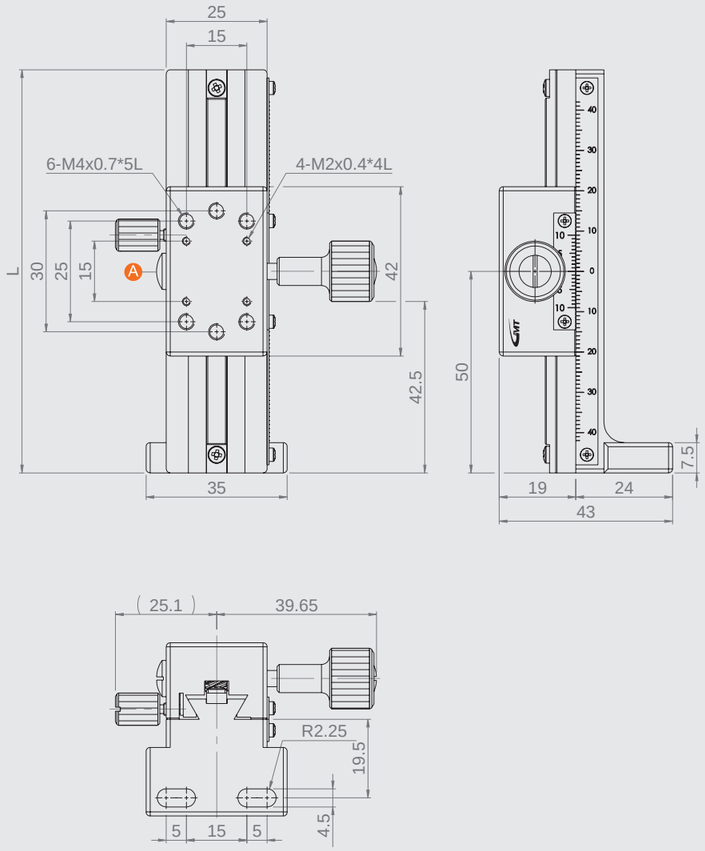

★ Available combined with MC1B (P.149), MC2B(P.150), MC1C(P.153).

★ Use slotted-driver to lock A clockwise to moderate sliding,rotating anti-clockwise to accerate sliding smoothly.

Specification

Unit: mm

Model no.	Table size (L)	Travel stroke	Minimum reading	Straightness accuracy	Allowable Loading (kgf)	Weight kg	Material	Surface finish
MC3C-50	50	±15	0.1 mm / Vernier	30 μm	1.5	0.12	Aluminum alloy	Black anodized
MC3C-70	70	±25				0.135		
MC3C-100	100	±40				0.16		
MC3C-150	150	±65		40 μm		0.215		
MC3C-200	200	±90		50 μm		0.3		
MC3C-250	250	±115		50 μm		0.36		
MC3C-300	300	±140		70 μm		0.41		

★ One revolution of the screw knob moves 18mm stroke.

MC3C-150-2

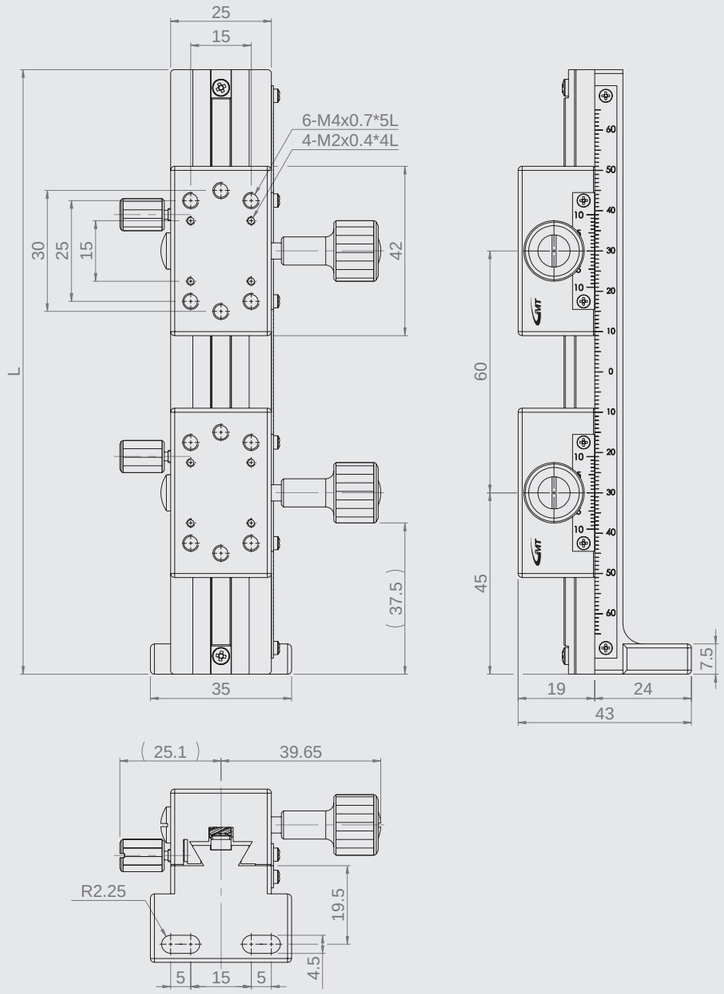

Specification

Unit: mm

Model no.	Table size (L)	Axis	Travel stroke	Movement per knob rotation	Minimum reading	Straightness accuracy	Allowable Loading (kgf)	Weight kg	Material	Surface finish	Remarks
MC3C-150-2	150	Z-axis	±20	18	0.1 mm / Vernier	40 μm	3	0.27	Aluminum alloy	Black anodized	Two slide blocks
MC3C-200-2	200		±37			50 μm	1.5	0.3			
MC3C-300-2	300		±70			70 μm	1.5	0.48			

MC3C-300-3

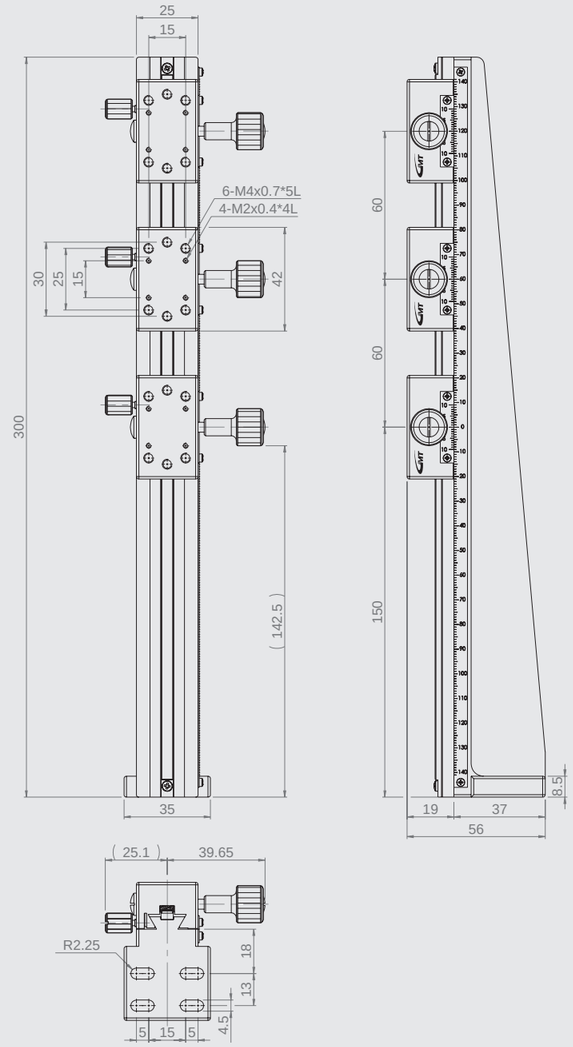

Specification

Unit: mm

Model no.	Table size	Axis	Travel stroke	Movement per knob rotation	Minimum reading	Straightness accuracy	Allowable Loading (kgf)	Weight kg	Material	Surface finish	Remarks
MC3C-300-3	300	Z-axis	±43	18	0.1 mm / Vernier	70 μm	1.5	0.55	Aluminum alloy	Black anodized	Three slide blocks

MC1D-60

MC1D-25

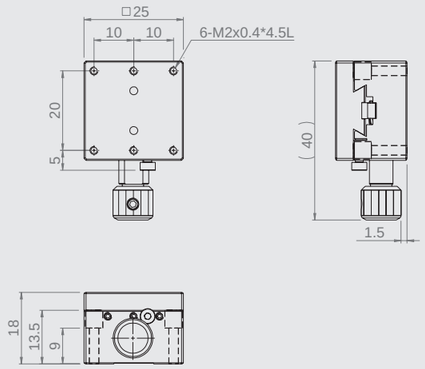

MC1D-40

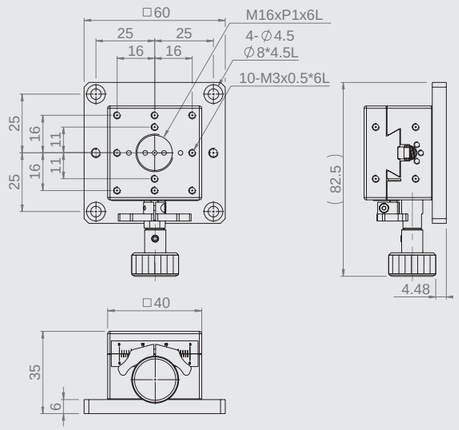

MC1D-60

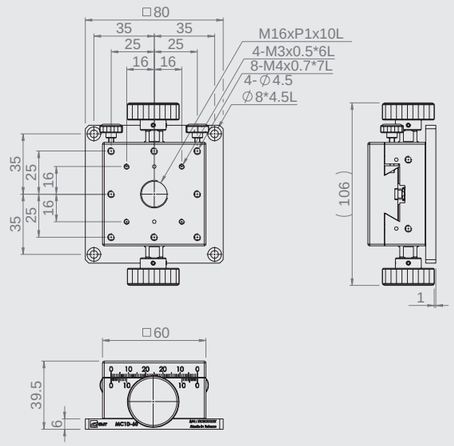

★ The vernier for MC1D-25, MC1D-60 is on the opposite side on the mounting surface of the fixture.

Specification

Unit: mm

Model no.	Table size	Travel stroke	Movement per knob rotation	Minimum reading	Straightness accuracy	Allowable Loading (kgf)	Weight kg	Material	Surface finish
MC1D-25	25*25	±5	17	0.1 mm / Vernier	20 μm	3.0	0.09	Brass alloy	Black fluororesin finished
MC1D-40	40*40	±10	20		20 μm		0.21	Aluminum alloy	Black anodized
MC1D-60	60*60	±20	18		30 μm	4.0	0.64		

MC2D-60

MC2D-25

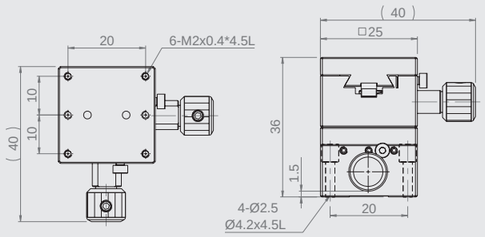

MC2D-40

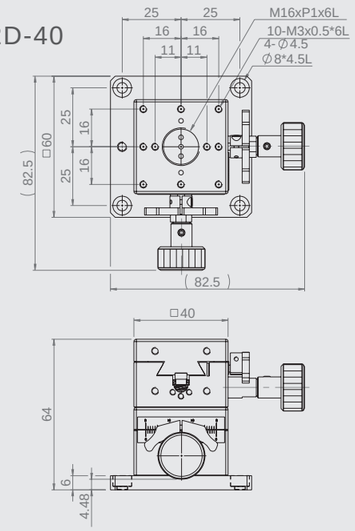

MC2D-60

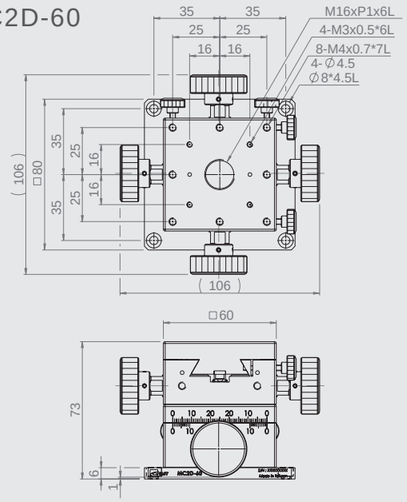

Specification

Unit: mm

Model no.	Table size	Travel stroke	Movement per knob rotation	Minimum reading	Straightness accuracy	Allowable Loading (kgf)	Weight kg	Material	Surface finish
MC2D-25	25*25	±5	17	0.1 mm / Vernier	20 μm	2.9	0.18	Brass alloy	Black fluororesin finished
MC2D-40	40*40	±10	20		20 μm	2.8	0.37	Aluminum alloy	Black anodized
MC2D-60	60*60	±20	18		30 μm	3.0	1.19		

MC4D-60

MC4D-25

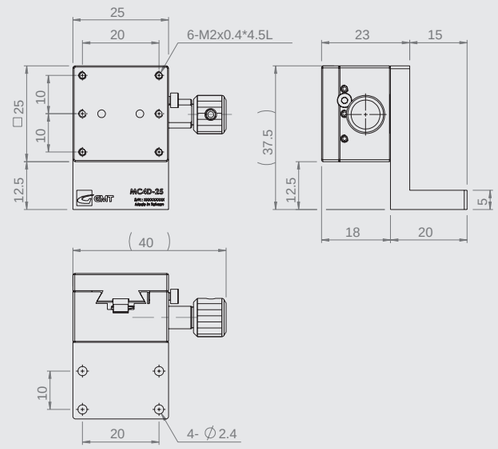

MC4D-40

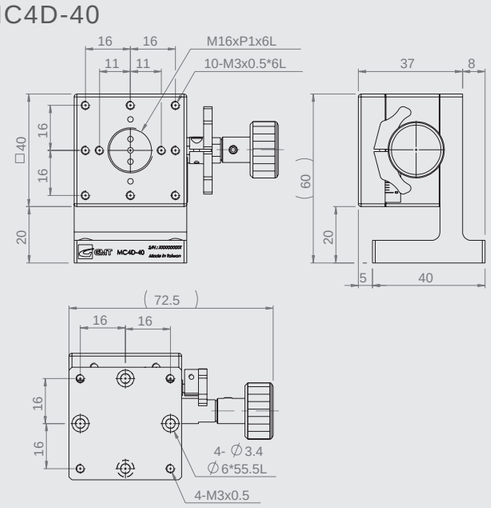

MC4D-60

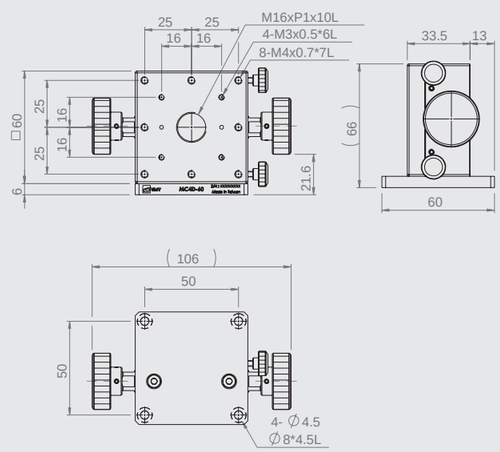

★ The vernier for MC4D-25 is on the opposite side on the mounting surface of the fixture.

Specification

Unit: mm

Model no.	Table size	Travel stroke	Movement per knob rotation	Minimum reading	Straightness accuracy	Allowable Loading (kgf)	Weight kg	Material	Surface finish
MC4D-25	25*25	±5	17	0.1 mm / Vernier	20 μm	0.7	0.11	Brass alloy	Black fluororesin finished
MC4D-40	40*40	±10	20		20 μm	1.5	0.23	Aluminum alloy	Black anodized
MC4D-60	60*60	±20	18		30 μm	2.0	0.60		

MC1D-40L

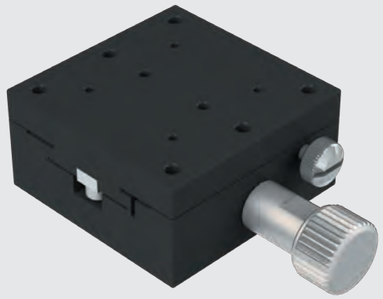

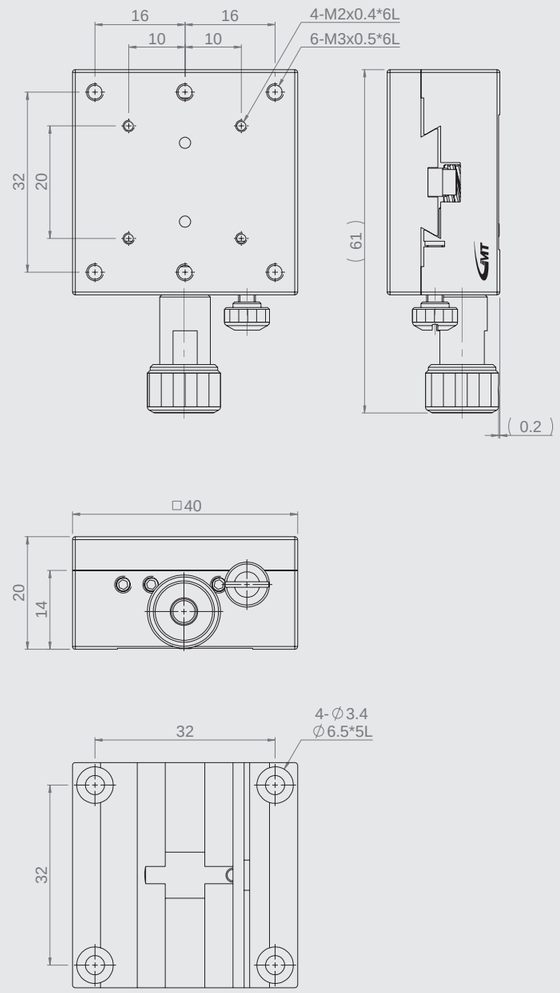

Specification

Unit: mm

Model no.	Table size	Axis	Travel stroke	Movement per knob rotation	Straightness accuracy	Allowable Loading (kgf)	Weight kg	Material	Surface finish
MC1D-40L	40*40	X axis	±10	20	30 μm	2	0.25	Aluminum alloy	Black fluororesin finished

MC2DA-48NH

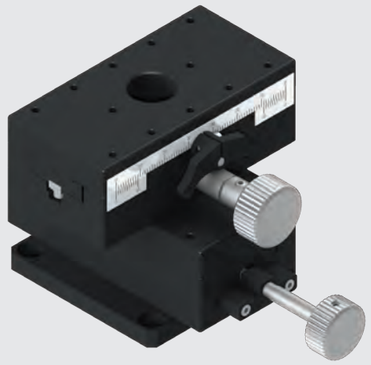

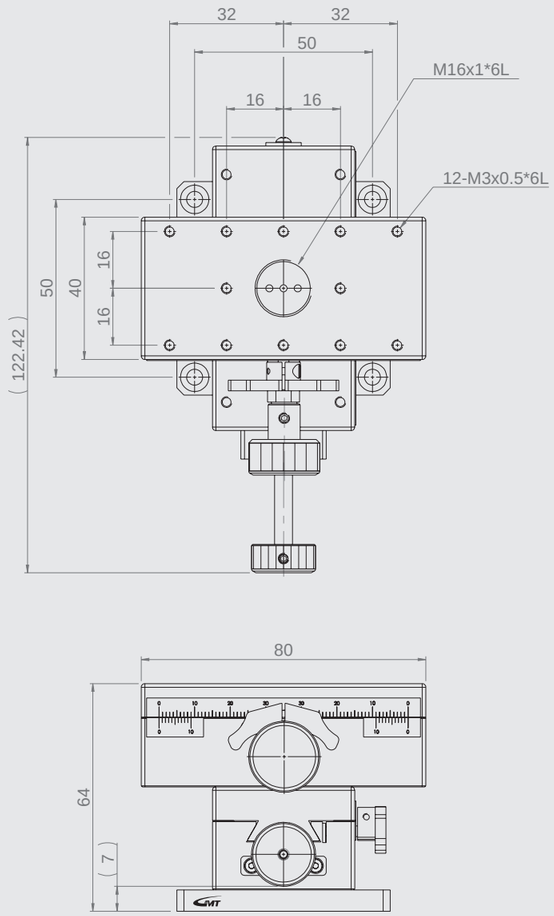

Specification

Unit: mm

Model no.	Table size	Axis	Travel stroke	Movement per knob rotation	Minimum reading	Straightness accuracy	Allowable Loading (kgf)	Weight kg	Material	Surface finish
MC2DA-48NH	40*80(up)	Y axis	±35	18	0.1 mm / Vernier	30 μm	3	0.6	Aluminum alloy	Black anodized
	40*80(lower)	X axis	±30	42						

MC3B-40

MC3B-25

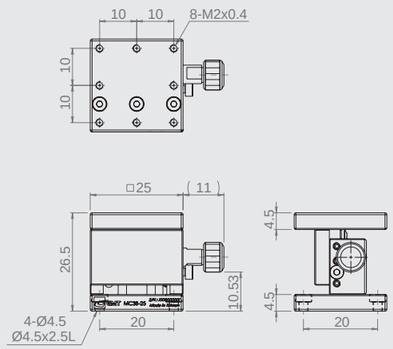

MC3B-40

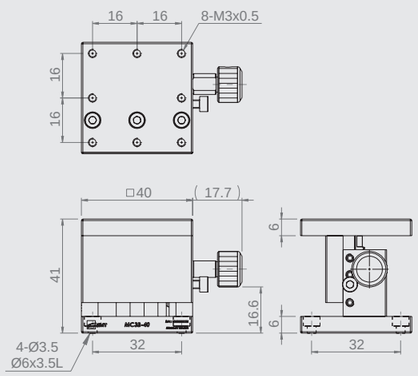

MC3B-60

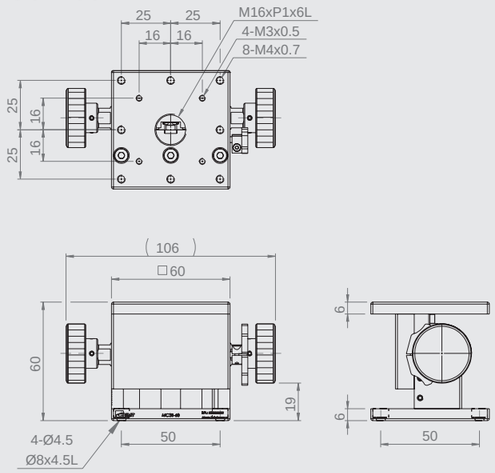

Specification

Unit: mm

Model no.	Table size	Travel stroke	Movement per knob rotation	Minimum reading	Straightness accuracy	Allowable Loading (kgf)	Weight kg	Material	Surface finish
MC3B-25	25*25	±2.5	≒8	0.1 mm / Vernier	30 μm	0.7	0.08	Brass alloy	Black fluororesin finished
MC3B-40	40*40	±5	≒13			1.0	0.12		
MC3B-60	60*60	±10	≒18			1.5	0.47	Aluminum alloy	Black anodized

★ 尺標刻度在固定具安裝面的對面。

MC5B-40

MC5B-25

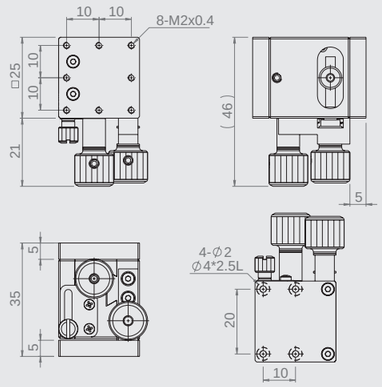

MC5B-40

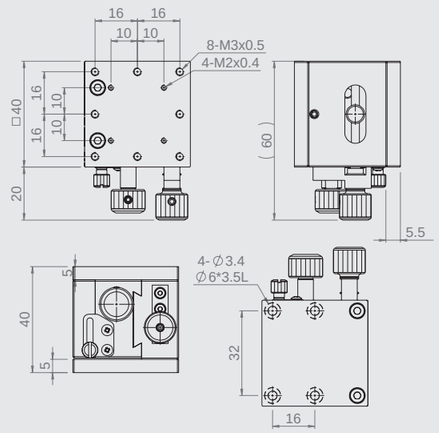

MC5B-60

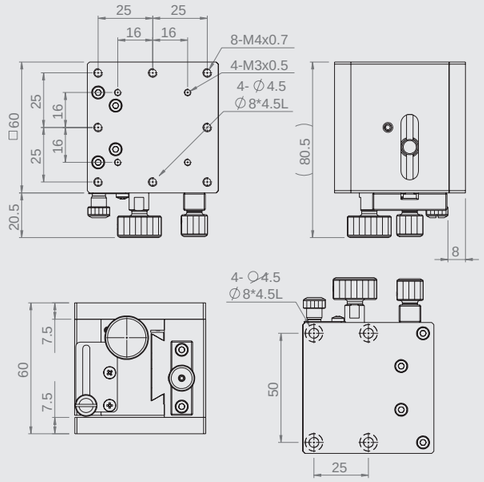

Specification

Unit: mm

Model no.	Table size	Travel stroke	Movement per knob rotation	Straightness accuracy	Allowable Loading (kgf)	Weight kg	Material	Surface finish
MC5B-25	25*25	X: ±5 Z: +10	X: 0.5 Z: ≒14	30 μm	1.0	0.17	Brass alloy	Black fluororesin finished
MC5B-40	40*40	X: ±7 Z: +10	X: 0.5 Z: ≒14			0.51		
MC5B-60	60*60	X: ±10 Z: +25	X: 0.5 Z: ≒20			0.62	Aluminum alloy	Black anodized

MC1BL-60

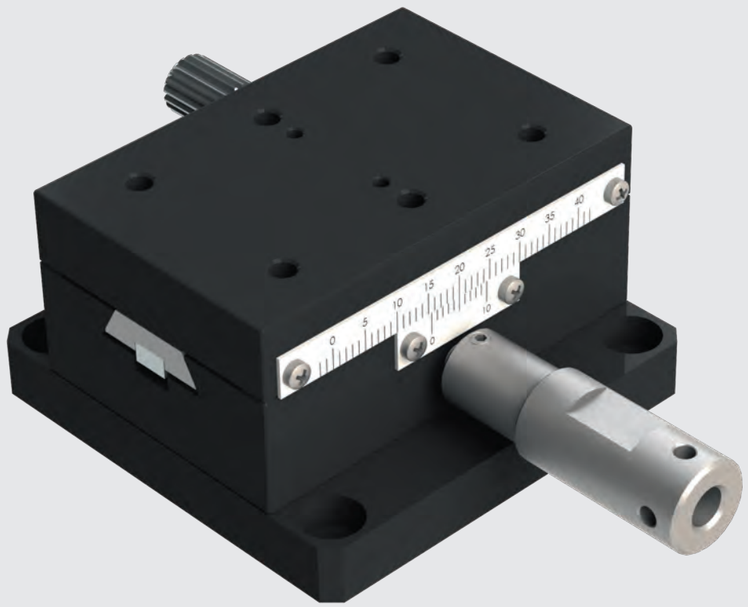

Specification

Unit: mm

Model no.	Table size	Axis	Travel stroke	Movement per knob rotation	Minimum reading	Straightness accuracy	Allowable Loading (kgf)	Weight kg	Material	Surface finish
MC1BL-60	40*60	X axis	±21	18	0.1 mm / Vernier	30 μm	3	0.3	Aluminum alloy	Black anodized

Dovetail guiding ▶ X axis ▶ Rack and pinion type
GMT GLOBAL INC.
Dovetail stage | X axis | Extend handle
Dovetail stage
X axis

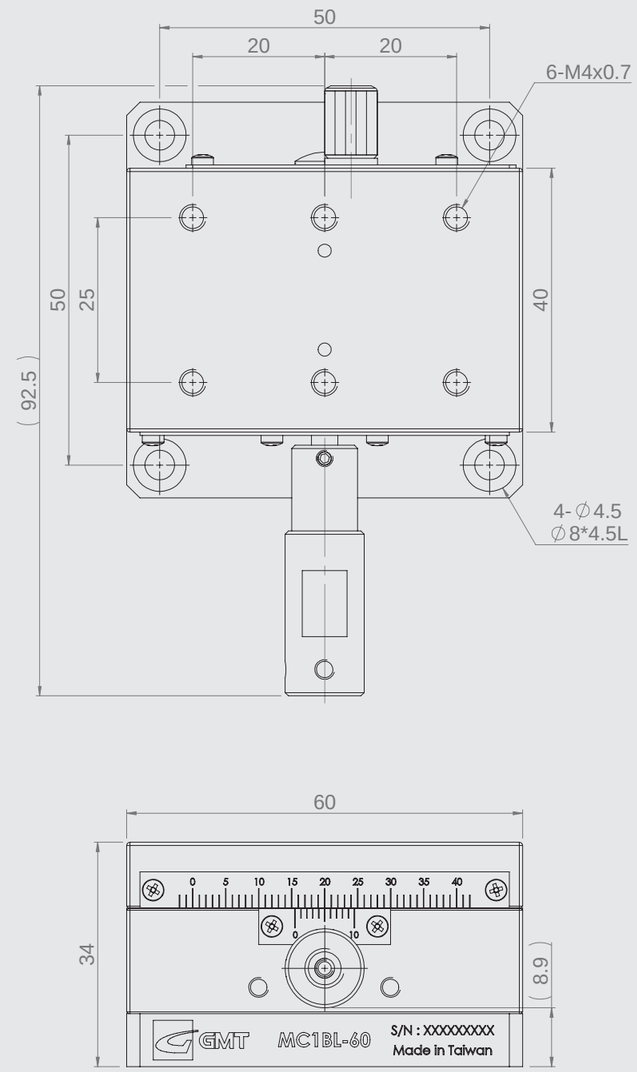

MCS-44

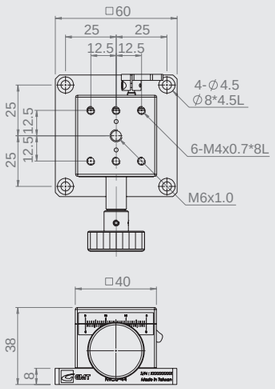

MCS-44

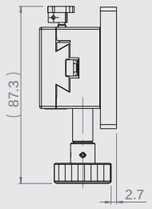

MCS-44W

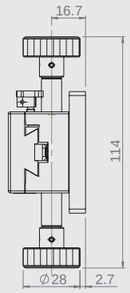

MCS-46

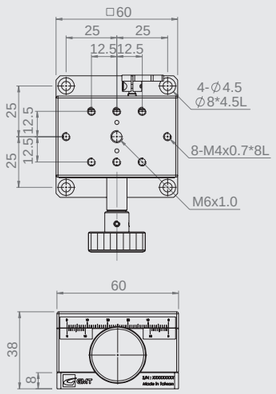

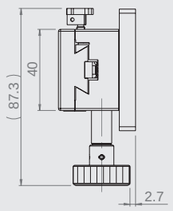

MCS-46W

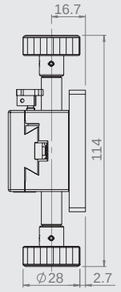

Specification

Unit: mm

Model no.	Table size	Axis	Knob No.	Travel stroke	Minimum reading	Straightness accuracy	Allowable Loading (kgf)	Weight kg	Material	Surface finish
MCS-44	40*40	X axis	Single	±10	0.1 mm / Vernier	30 μm	4.0	0.24	Aluminum alloy	Black anodized
MCS-44W			Dual					0.27		
MCS-46	40*60		Single	±15				0.31		
MCS-46W			Dual					0.33		

★ 尺標刻度在固定具安裝面的對面。

MCS-49

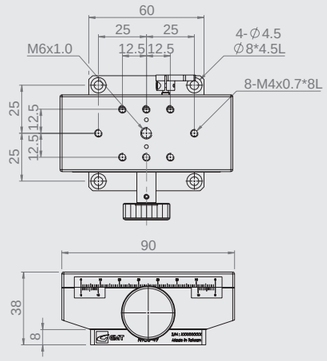

MCS-49

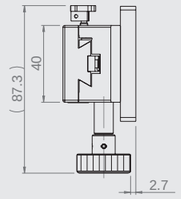

MCS-49W

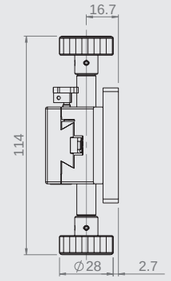

MCS-41

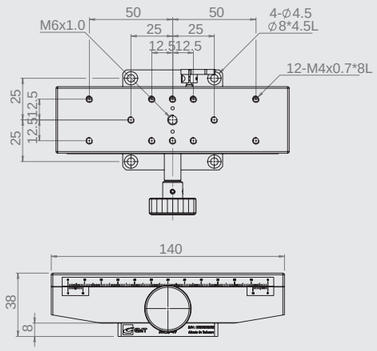

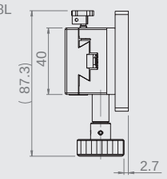

MCS-41W

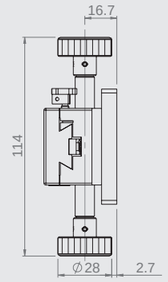

Specification

Unit: mm

Model no.	Table size	Axis	Knob No.	Travel stroke	Minimum reading	Straightness accuracy	Allowable Loading (kgf)	Weight kg	Material	Surface finish
MCS-49	40*90	X axis	Single	±30	0.1 mm / Vernier	30 μm	4.0	0.4	Aluminum alloy	Black anodized
MCS-49W			Dual					0.42		
MCS-41	40*140		Single	±50				0.55		
MCS-41W			Dual					0.58		

MCD-44

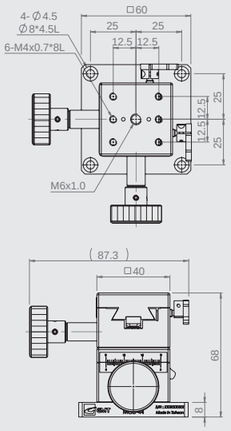

MCD-44

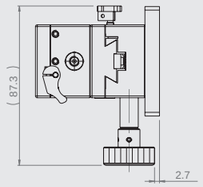

MCD-44W

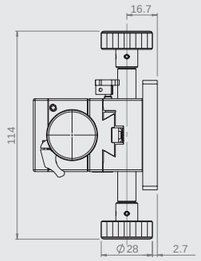

MCD-46

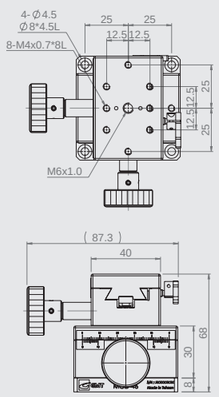

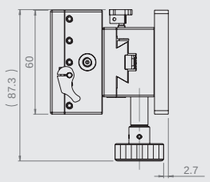

MCD-46W

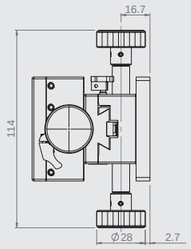

Specification

Unit: mm

Model no.	Table size	Axis	Knob No.	Travel stroke	Minimum reading	Straightness accuracy	Allowable Loading (kgf)	Weight kg	Material	Surface finish
MCD-44	40*40	XY-axis	Single	±10	0.1 mm / Vernier	30 μm	3.5	0.41	Aluminum alloy	Black anodized
MCD-44W			Dual					0.46		
MCD-46	40*60		Single	±15				0.54		
MCD-46W			Dual					0.59		

MCD-49

MCD-49

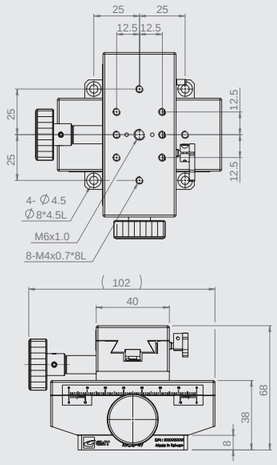

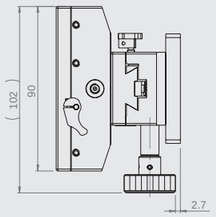

MCD-49W

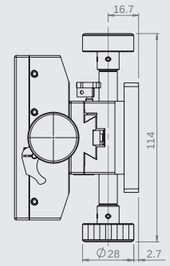

MCD-41

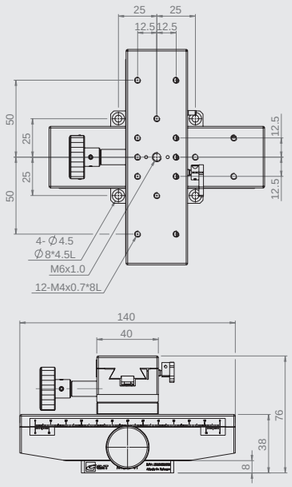

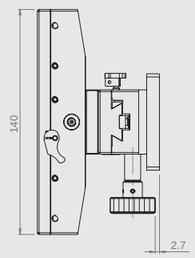

MCD-41W

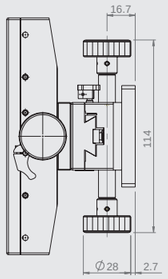

Specification

Unit: mm

Model no.	Table size	Axis	Knob No.	Travel stroke	Minimum reading	Straightness accuracy	Allowable Loading (kgf)	Weight kg	Material	Surface finish
MCD-49	40*90	XY-axis	Single	±30	0.1 mm / Vernier	30 μm	3.5	0.72	Aluminum alloy	Black anodized
MCD-49W			Dual					0.77		
MCD-41	40*140		Single	±50				1.07		
MCD-41W			Dual					1.12		

MCV-44

MCV-44

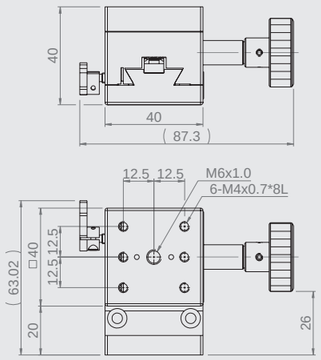

MCV-44W

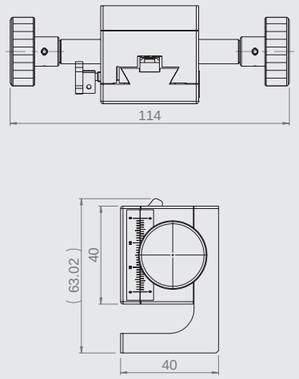

MCV-46

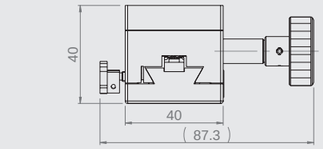

MCV-46W

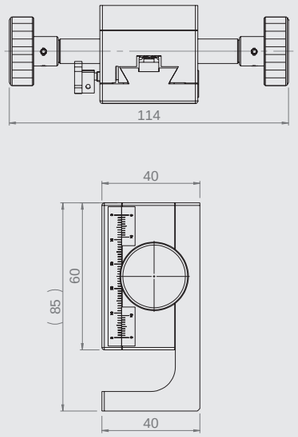

Specification

Unit: mm

Model no.	Table size	Axis	Knob No.	Travel stroke	Minimum reading	Straightness accuracy	Allowable Loading (kgf)	Weight kg	Material	Surface finish
MCV-44	40*40	Z-axis	Single	±10	0.1 mm / Vernier	30 μm	2	0.26	Aluminum alloy	Black anodized
MCV-44W			Dual					0.28		
MCV-46	40*60		Single	±15				0.36		
MCV-46W			Dual					0.38		

MCV-49

MCV-49

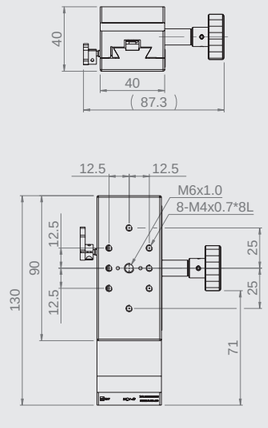

MCV-49W

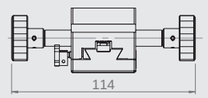

MCV-41

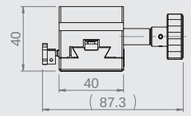

MCV-41W

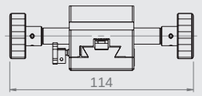

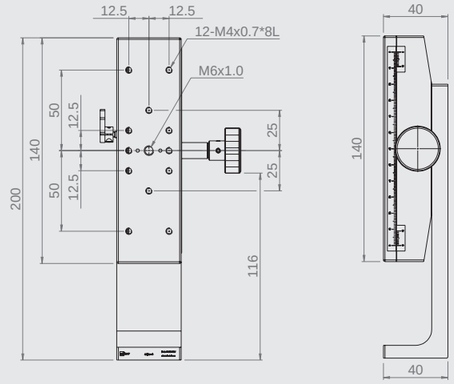

Specification

Unit: mm

Model no.	Table size	Axis	Knob No.	Travel stroke	Minimum reading	Straightness accuracy	Allowable Loading (kgf)	Weight kg	Material	Surface finish
MCV-49	40*90	Z-axis	Single	±30	0.1 mm / Vernier	30 μm	2	0.47	Aluminum alloy	Black anodized
MCV-49W			Dual					0.5		
MCV-41	40*140		Single	±50				0.67		
MCV-41W			Dual					0.7		

MCV-44L

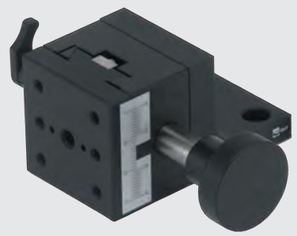

MCV-44L

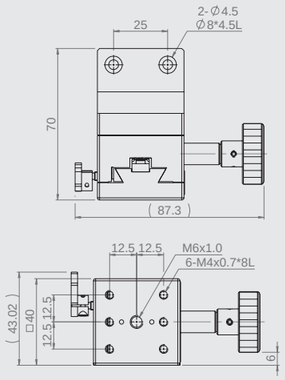

MCV-44WL

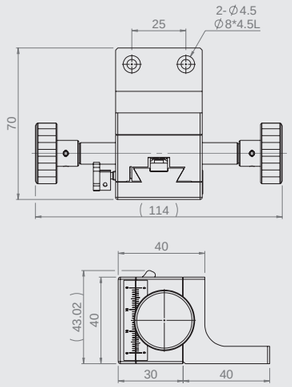

MCV-46L

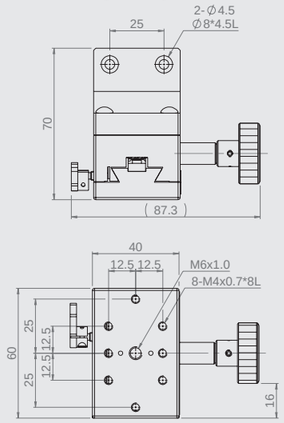

MCV-46WL

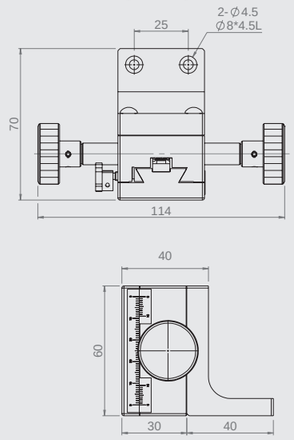

Specification

Unit: mm

Model no.	Table size	Axis	Knob No.	Travel stroke	Minimum reading	Straightness accuracy	Allowable Loading (kgf)	Weight kg	Material	Surface finish
MCV-44L	40*40	Z-axis	Single	±10	0.1 mm / Vernier	30 μm	2	0.23	Aluminum alloy	Black anodized
MCV-44WL			Dual					0.26		
MCV-46L	40*60		Single	±15				0.33		
MCV-46WL			Dual					0.35		

MCV-49L

MCV-49L

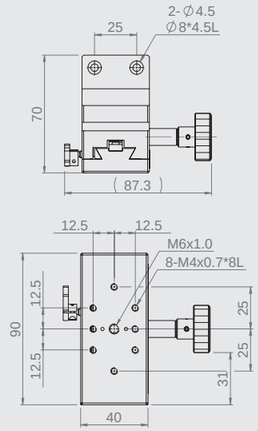

MCV-49WL

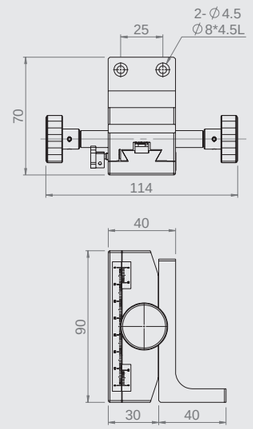

MCV-41L

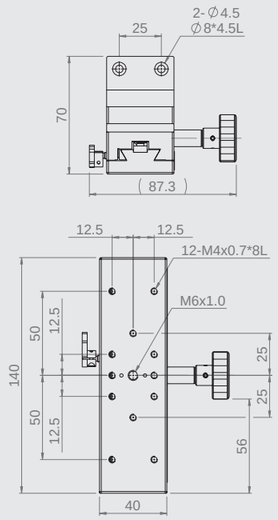

MCV-41WL

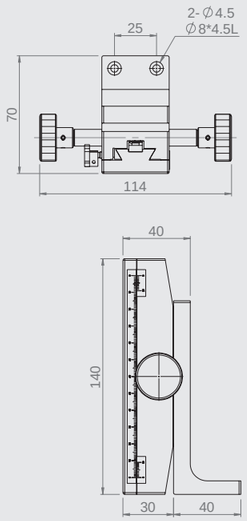

Specification

Unit: mm

Model no.	Table size	Axis	Knob No.	Travel stroke	Minimum reading	Straightness accuracy	Allowable Loading (kgf)	Weight kg	Material	Surface finish
MCV-49L	40*90	Z-axis	Single	±30	0.1 mm / Vernier	30 μm	2	0.45	Aluminum alloy	Black anodized
MCV-49WL			Dual					0.47		
MCV-41L	40*140		Single	±50				0.63		
MCV-41WL			Dual					0.66		

MCM-44

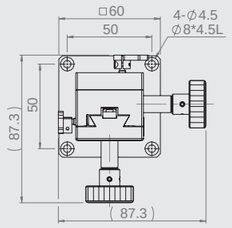

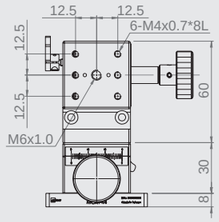

MCM-44

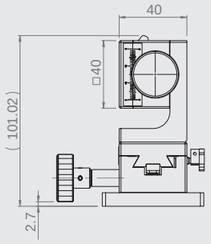

MCM-44W

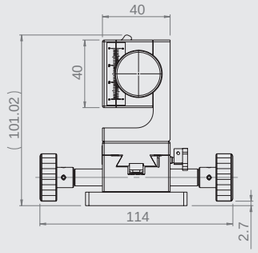

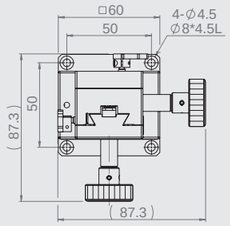

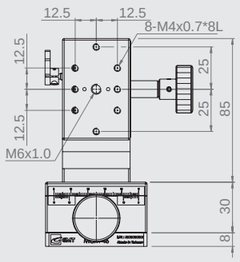

MCM-46

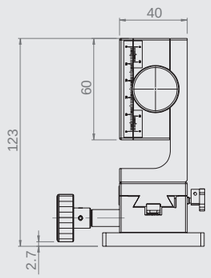

MCM-46W

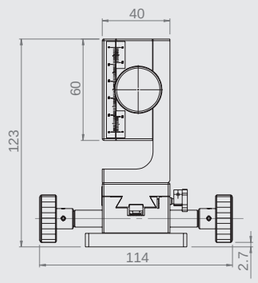

Specification

Unit: mm

Model no.	Table size	Axis	Knob No.	Travel stroke	Minimum reading	Straightness accuracy	Allowable Loading (kgf)	Weight kg	Material	Surface finish
MCM-44	40*40	X+Z axis	Single	±10	0.1 mm / Vernier	30 μm	2	0.5	Aluminum alloy	Black anodized
MCM-44W			Dual					0.55		
MCM-46	40*60		Single	±15				0.67		
MCM-46W			Dual					0.72		

MCM-49

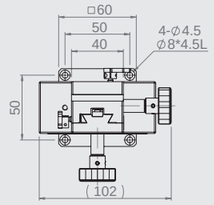

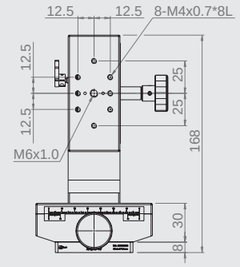

MCM-49

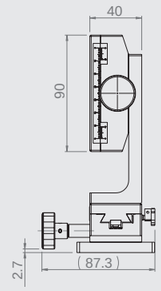

MCM-49W

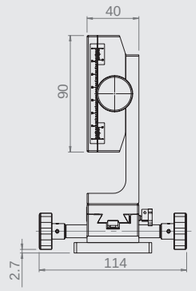

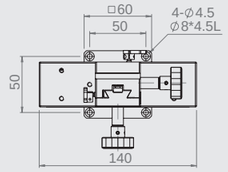

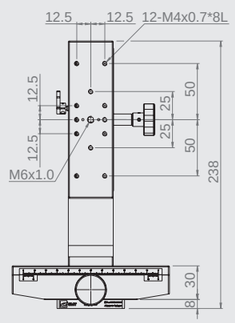

MCM-41

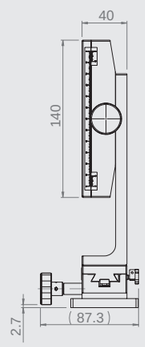

MCM-41W

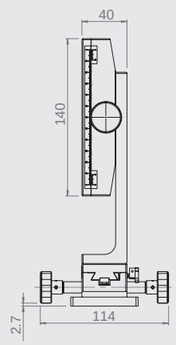

Specification

Unit: mm

Model no.	Table size	Axis	Knob No.	Travel stroke	Minimum reading	Straightness accuracy	Allowable Loading (kgf)	Weight kg	Material	Surface finish
MCM-49	40*90	X+Z axis	Single	±30	0.1 mm / Vernier	30 μm	2	0.87	Aluminum alloy	Black anodized
MCM-49W			Dual					0.92		
MCM-41	40*140		Single	±50				1.23		
MCM-41W			Dual					1.28		

MCM-44L

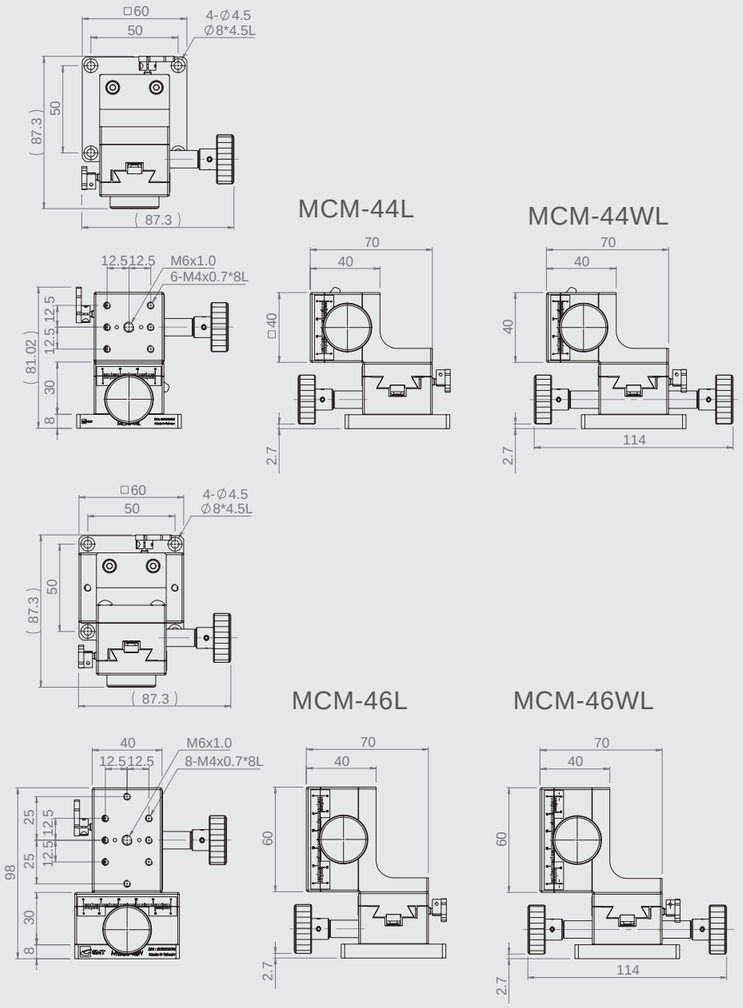

Specification

Unit: mm

Model no.	Table size	Axis	Knob No.	Travel stroke	Minimum reading	Straightness accuracy	Allowable Loading (kgf)	Weight kg	Material	Surface finish
MCM-44L	40*40	X+Z axis	Single	X: ±10 Z: 10	0.1 mm / Vernier	30 μm	2	0.47	Aluminum alloy	Black anodized
MCM-44WL			Dual					0.52		
MCM-46L	40*60		Single	X: ±15 Z: 15				0.64		
MCM-46WL			Dual					0.68		

MCM-49L

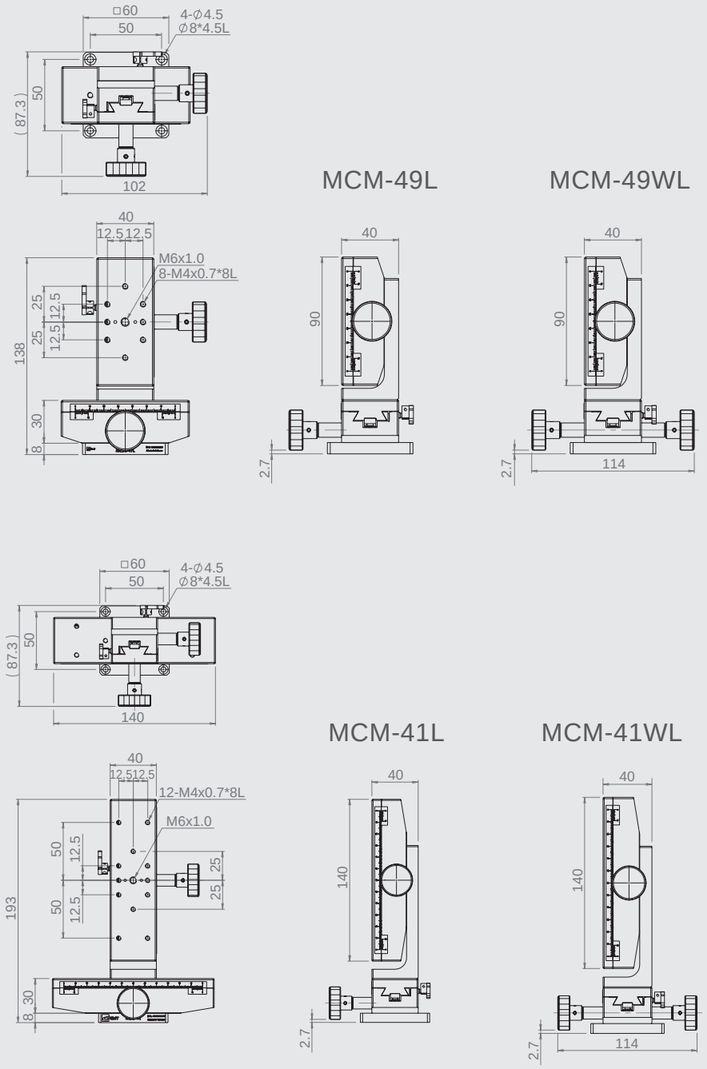

Specification

Unit: mm

Model no.	Table size	Axis	Knob No.	Travel stroke	Minimum reading	Straightness accuracy	Allowable Loading (kgf)	Weight kg	Material	Surface finish
MCM-49L	40*90	X+Z axis	Single	X: ±30 Z: 30	0.1 mm / Vernier	30 μm	2	0.85	Aluminum alloy	Black anodized
MCM-49WL			Dual					0.89		
MCM-41L	40*140		Single	X: ±50 Z: 50				1.18		
MCM-41WL			Dual					1.24		

MCT-44

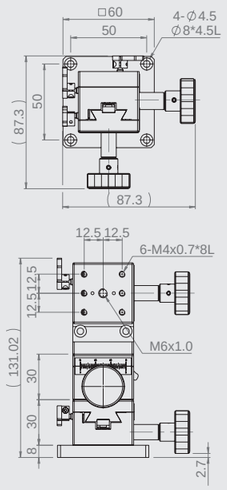

MCT-44

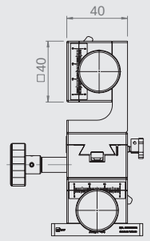

MCT-44W

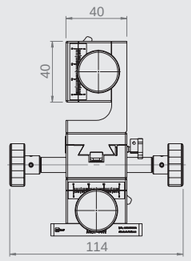

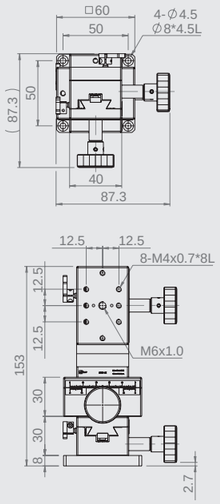

MCT-46

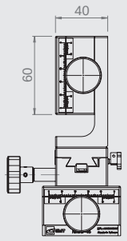

MCT-46W

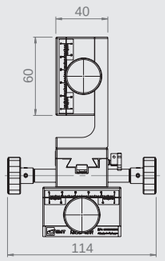

Specification

Unit: mm

Model no.	Table size	Axis	Knob No.	Travel stroke	Minimum reading	Straightness accuracy	Allowable Loading (kgf)	Weight kg	Material	Surface finish
MCT-44	40*40	XY+Z axis	Single	±10	0.1 mm / Vernier	30 μm	2	0.67	Aluminum alloy	Black anodized
MCT-44W			Dual					0.74		
MCT-46	40*60		Single	±15				0.9		
MCT-46W			Dual					0.98		

MCT-49

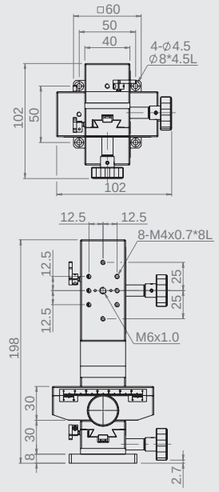

MCT-49

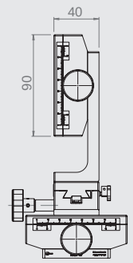

MCT-49W

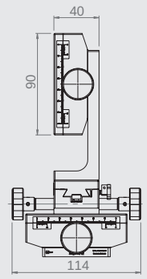

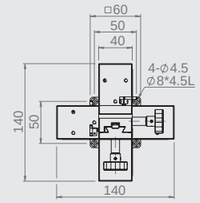

MCT-41

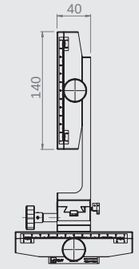

MCT-41W

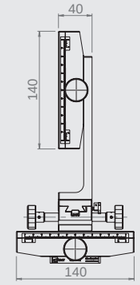

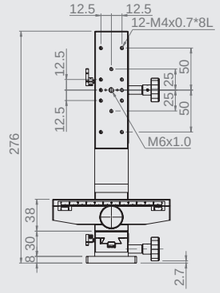

Specification

Unit: mm

Model no.	Table size	Axis	Knob No.	Travel stroke	Minimum reading	Straightness accuracy	Allowable Loading (kgf)	Weight kg	Material	Surface finish
MCT-49	40*90	XY+Z axis	Single	±30	0.1 mm / Vernier	30 μm	2	1.2	Aluminum alloy	Black anodized
MCT-49W			Dual					1.27		
MCT-41	40*140		Single	±50				1.74		
MCT-41W			Dual					1.82		

MCT-44L

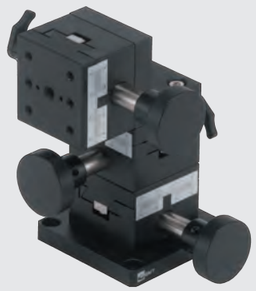

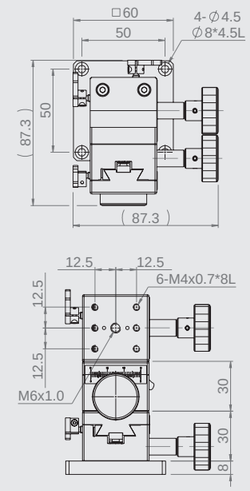

MCT-44L

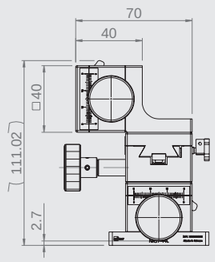

MCT-44WL

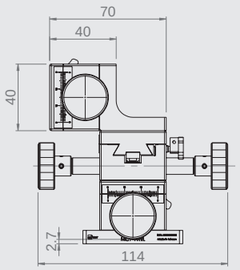

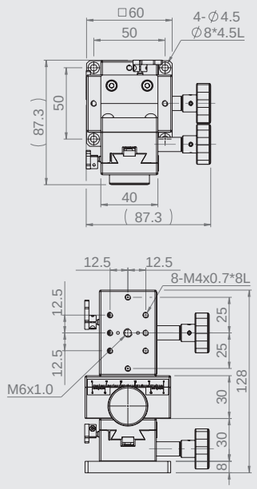

MCT-46L

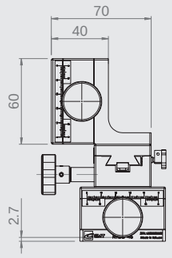

MCT-46WL

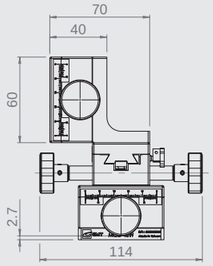

Specification

Unit: mm

Model no.	Table size	Axis	Knob No.	Travel stroke	Minimum reading	Straightness accuracy	Allowable Loading (kgf)	Weight kg	Material	Surface finish
MCT-44L	40*40	XY+Z axis	Single	XY: ±10 Z: 10	0.1 mm / Vernier	30 μm	2	0.64	Aluminum alloy	Black anodized
MCT-44WL			Dual					0.72		
MCT-46L	40*60		Single	XY: ±15 Z: 15				0.87		
MCT-46WL			Dual					0.94		

MCT-49L

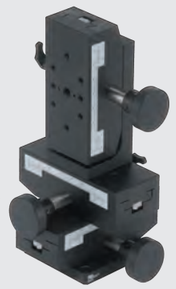

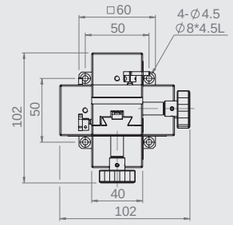

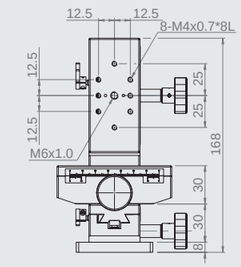

MCT-49L

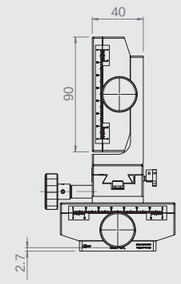

MCT-49WL

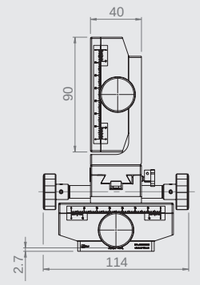

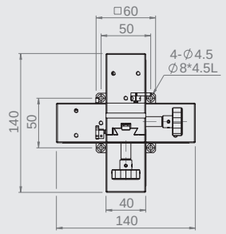

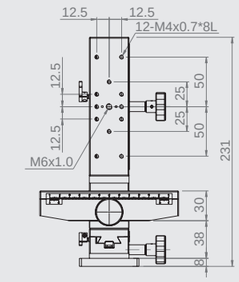

MCT-41L

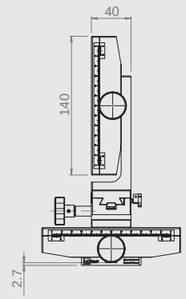

MCT-41WL

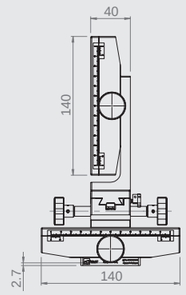

Specification

Unit: mm

Model no.	Table size	Axis	Knob No.	Travel stroke	Minimum reading	Straightness accuracy	Allowable Loading (kgf)	Weight kg	Material	Surface finish
MCT-49L	40*90	XY+Z axis	Single	XY: ±30 Z: 30	0.1 mm / Vernier	30 μm	2	1.17	Aluminum alloy	Black anodized
MCT-49WL			Dual					1.24		
MCT-41L	40*140		Single	XY: ±50 Z: 50				1.7		
MCT-41WL			Dual					1.78		

MC5D-2550

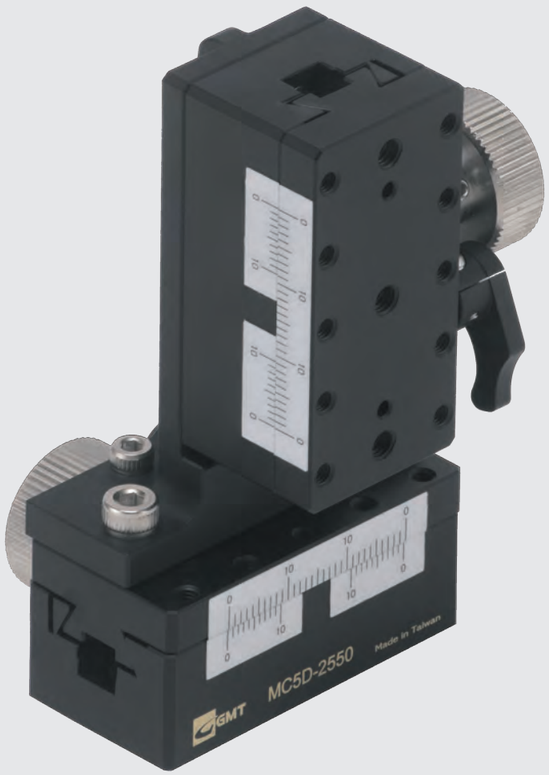

Specification

Unit: mm

Model no.	Table size	Axis	Travel stroke	Minimum reading	Moment Accuracy Straightness	Allowable Loading (kgf)	Weight kg	Material	Surface finish
MC1D-2550	25*50	X axis	±10	0.1 mm / Vernier	30 μm	8	0.22	Brass alloy	Black fluororesin finished
MC2D-2550		XY-axis				8	0.44		
MC4D-2550		Z-axis				1	0.3		
MC5D-2550		X+Z axis				1	0.52		
MC6D-2550		XY+Z axis				1	0.75		

MC1D-2550

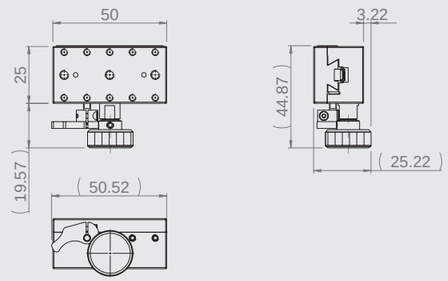

MC2D-2550

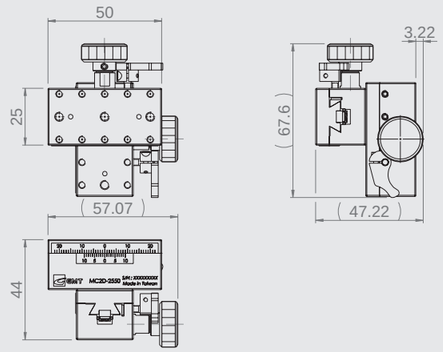

MC4D-2550

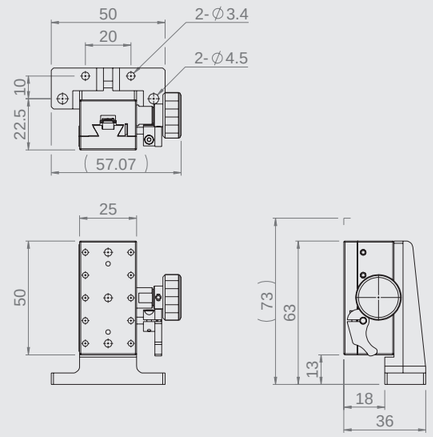

MC5D-2550

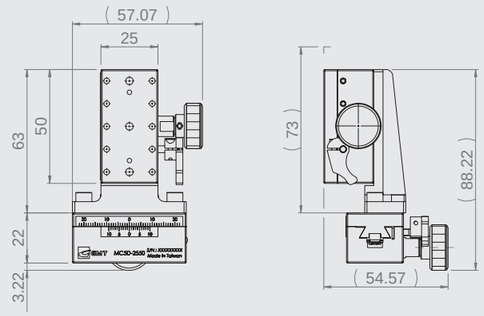

MC6D-2550

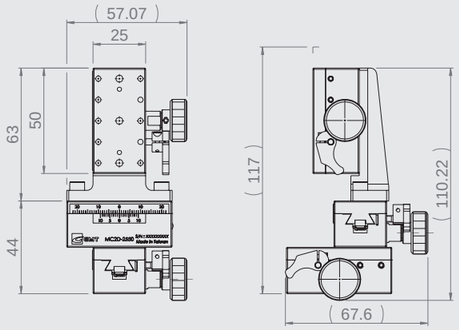

MC#A-2550
(Table dimensions)

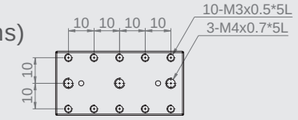

MC#A-2550
(Table dimensions)

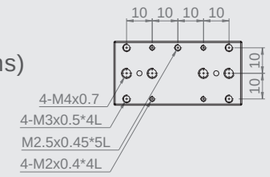

MC1E-60

MC2E-60

Specification

Unit: mm

Model no.	Table size	Axis	Travel stroke	Minimum reading	Moment Accuracy Straightness	Allowable Loading (kgf)	Weight kg	Material	Surface finish
MC1E-25	25*25	X axis	±3	No Scale	30 μm	3	0.07	Brass alloy	Black fluororesin finished
MC1E-40	40*40		±5			3	0.19		
MC1E-60	60*60		±7			4	0.6		
MC2E-25	25*25	XY-axis	±3			2.9	0.15		
MC2E-40	40*40		±5			2.8	0.38		
MC2E-60	60*60		±7			3.4	1.2		

MC1E-25

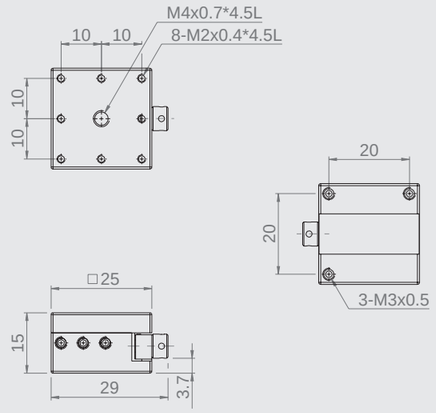

MC2E-25

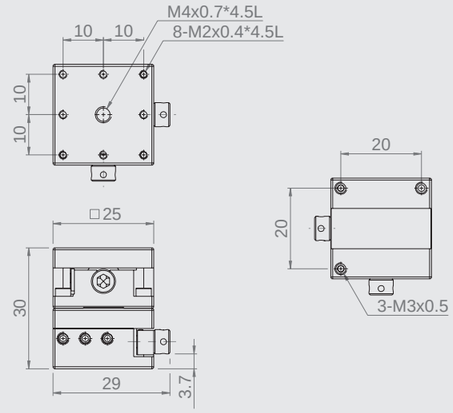

MC1E-40

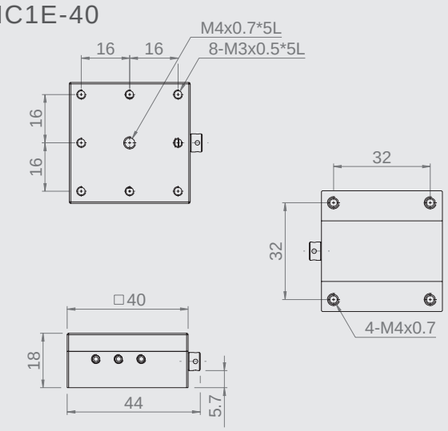

MC2E-40

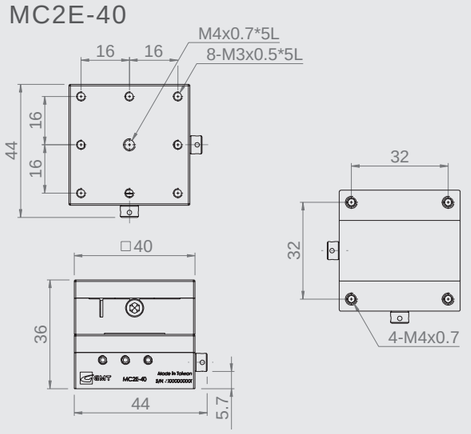

MC1E-60

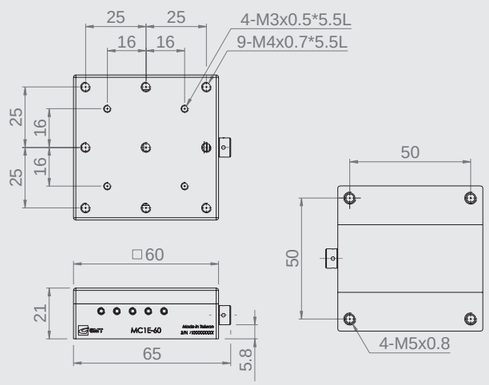

MC2E-60

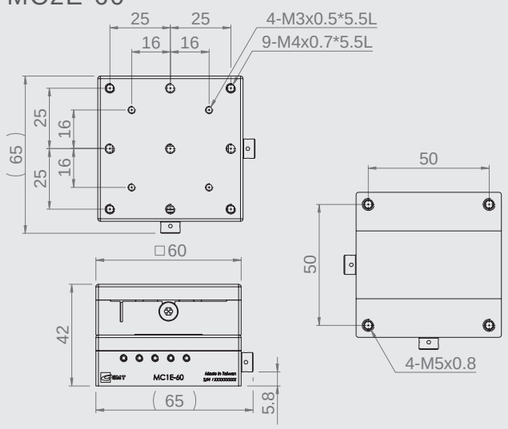

MC4E-60

Specification

Unit: mm

Model no.	Table size	Axis	Travel stroke	Minimum reading	Moment Accuracy Straightness	Allowable Loading (kgf)	Weight kg	Material	Surface finish
MC4E-25	25*25	Z-axis	±3	No Scale	20 μm	1	0.08	Brass alloy	Black fluororesin finished
MC4E-40	40*40		±5			1	0.27		
MC4E-60	60*60		±7			2	0.65		

MC4E-25

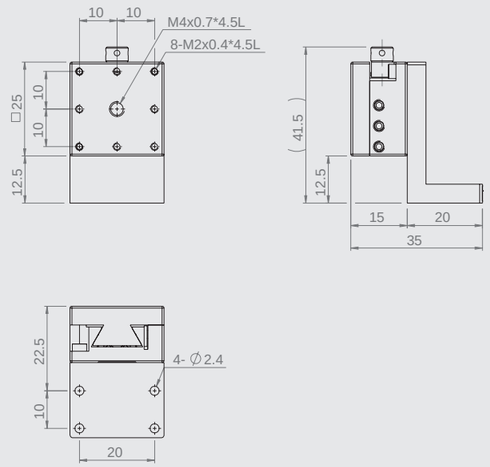

MC4E-40

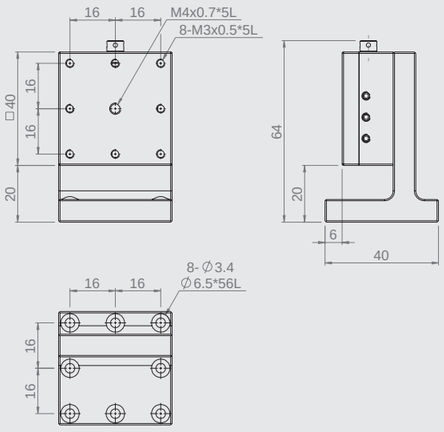

MC4E-60

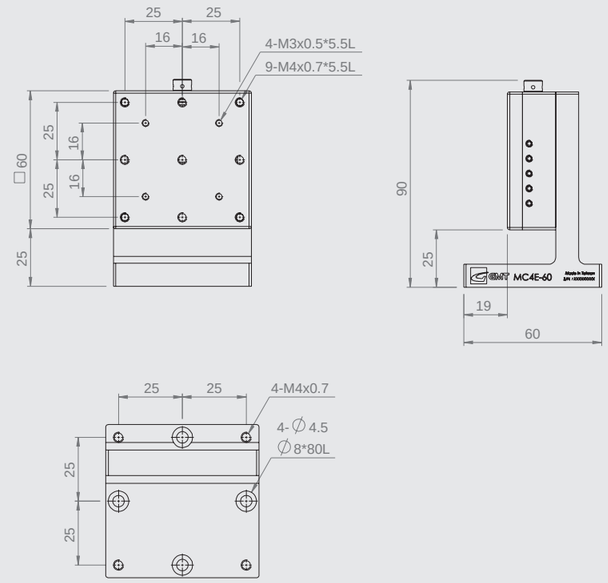

MC6E-25

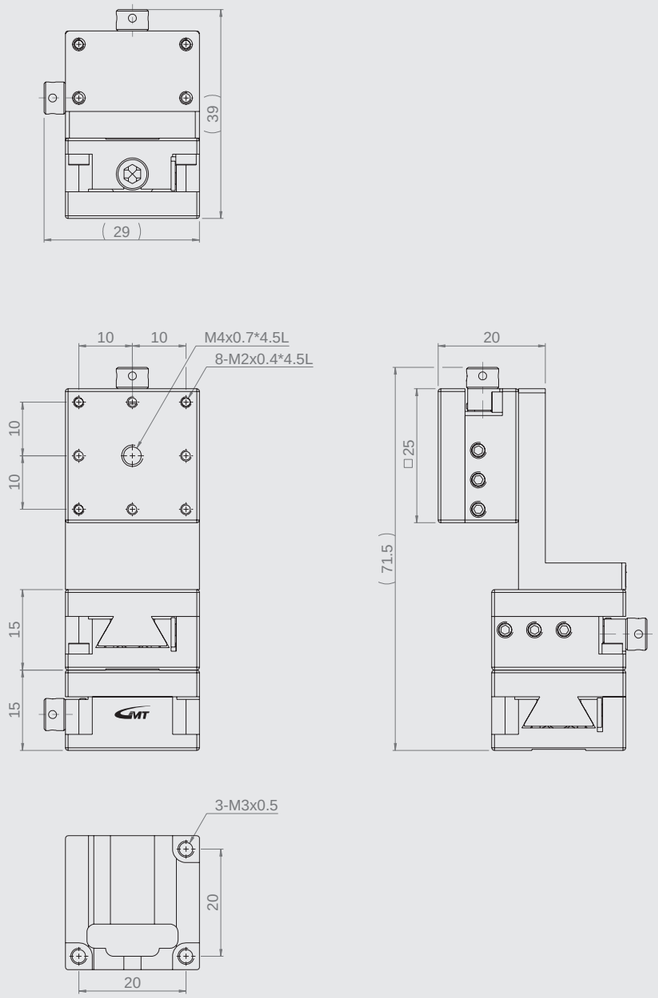

Specification

Unit: mm

Model no.	Table size	Axis	Travel stroke	Movement per knob cycle	Moment Accuracy Straightness	Allowable Loading (kgf)	Weight kg	Material	Surface finish
MC6E-25	25*25	XY+Z axis	±3	0.5	30 μm	1.9	0.22	Brass alloy	Black flororesin finished

MC1G-525C(F)

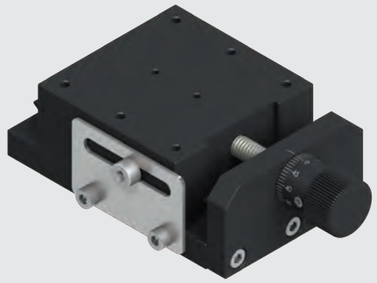

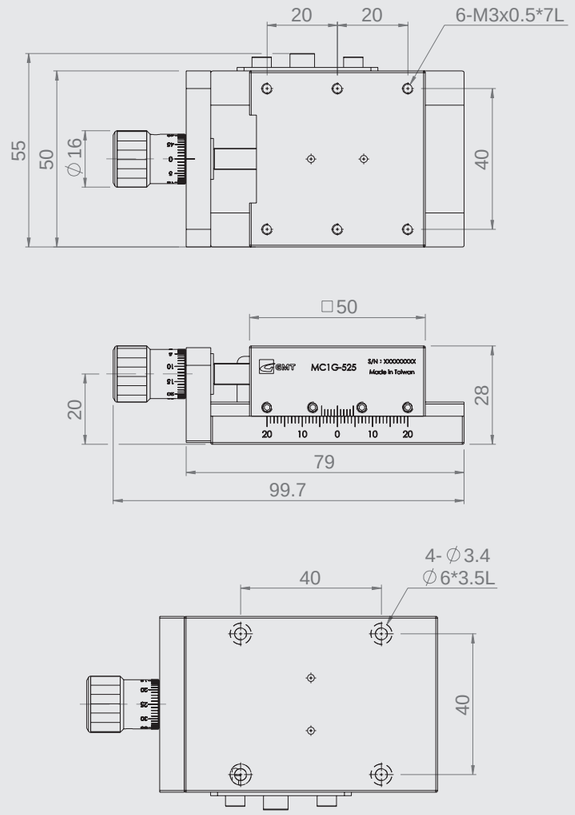

Knob type :

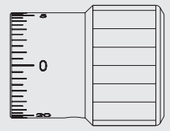

MC1G-525F(Fit to PITCH0.25)

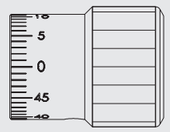

MC1G-525C(Fit to PITCH0.5)

Specification

Unit: mm

Model no.	Table size	Base dimensions	Adjustment structure: Movement per knob cycle	Adjustment structure: Knob mini. Reading	Adjustment structure: Travel stroke	Straightness accuracy	Parallel	Dynamic Parallel	Allowable Loading (kgf)	Weight kg	Material	Surface finish
MC1G-525C	50*50	50*79	0.5	0.01/div.	±11	0.03	0.05	0.04	5	0.27	Aluminum alloy	Black anodized
MC1G-525F			0.25	0.005/div.								

MC1G-535C(F)

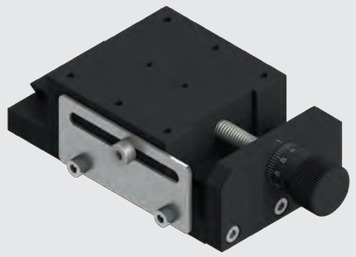

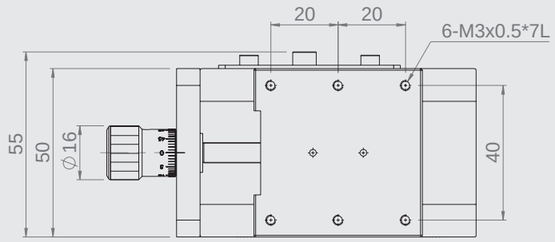

Knob type :

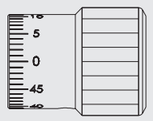

MC1G-535C(Fit to PITCH0.5)

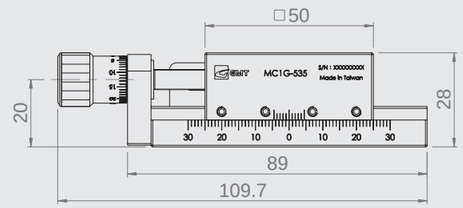

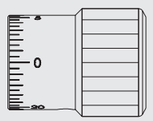

MC1G-535F(Fit to PITCH0.25)

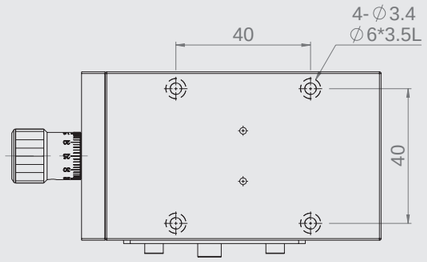

Specification

Unit: mm

Model no.	Table size	Base dimensions	Adjustment structure			Straightness accuracy	Parallel	Dynamic Parallel	Allowable	Weight	Material	Surface finish
			Movement per knob cycle	Knob mini. Reading	移動行程				Loading (kgf)	kg		
MC1G-535C	50*50	50*89	0.5	0.01/div.	±16	0.03	0.05	0.04	5	0.29	Aluminum alloy	Black anodized
MC1G-535F			0.25	0.005/div.								

MC7G-4050C(F)

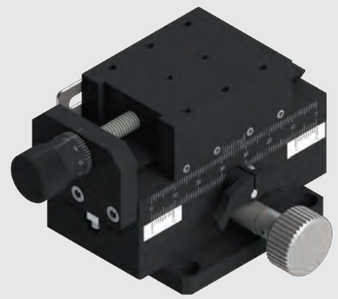

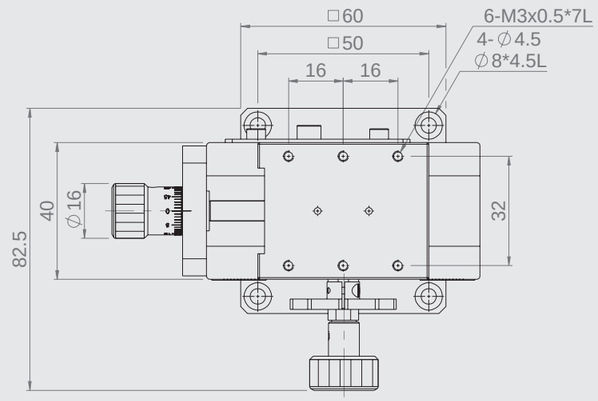

Knob type :

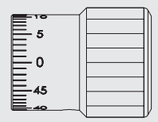

MC7G-4050C(Fit to PITCH0.5)

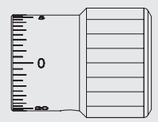

MC7G-4050F(Fit to PITCH0.25)

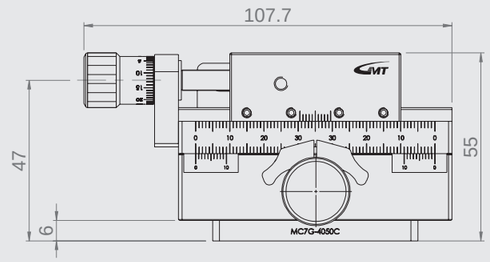

Specification

Unit: mm

Model no.	Table size	Base dimensions	Fine tuning			Coarse adjustment			Straightness accuracy	Parallel	Dynamic Parallel	Allowable	Weight	Material	Surface finish
			Movement per knob cycle	Knob mini. Reading	移動行程	Movement per knob cycle	Minimum reading	移動行程				Loading (kgf)	kg		
MC7G-4050C	40*50	40*80	0.5	0.01/div.	±17.5	≒18 mm	0.1mm / Vernier	±30	0.03	0.05	0.04	4	0.5	Aluminum alloy	Black anodized
MC7G-4050F			0.25	0.005/div.											

MC1B-35LG

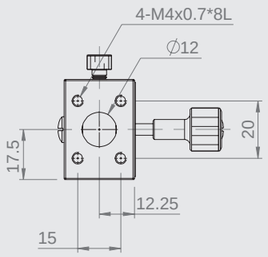

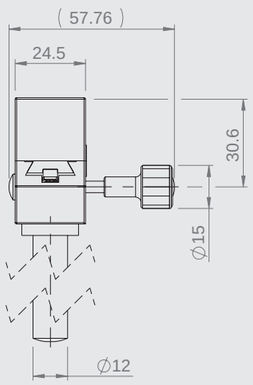

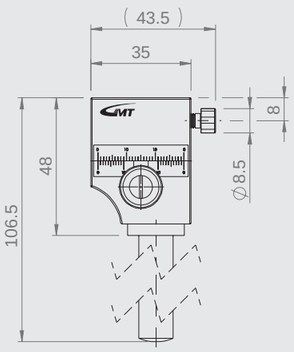

Specification

Unit: mm

Model no.	Table size	Axis	Feed position	滑台移動行程	Minimum reading	Straightness accuracy	Dynamic Straightness accuracy	Dynamic Parallel	Allowable Loading (kgf)	Weight kg	Material	Surface finish
MC1B-35LG	24.5*35	X axis	central	±10 mm	0.1mm / Vernier	0.03 mm	N / A	N / A	3	0.25	Aluminum alloy	Black anodized

MC6B-35LG

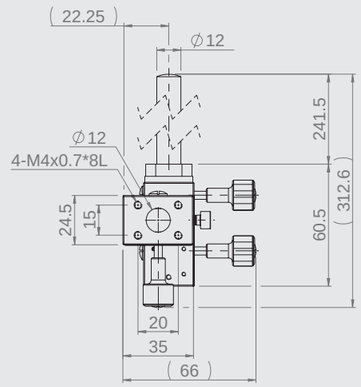

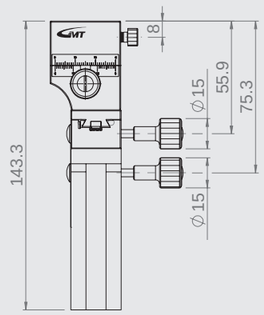

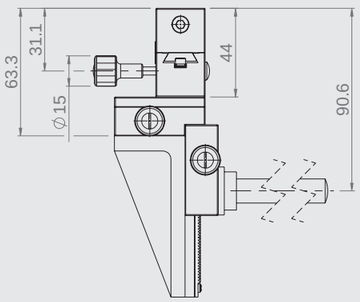

Specification

Unit: mm

Model no.	Axis / Travel stroke			Movement per knob cycle	Allowable Loading (kgf)	Weight kg	Material	Surface finish
	X axis	Y axis	Z axis					
MC6B-35LG	20	30	60	18	2	0.81	Aluminum alloy	Black anodized

MC1F-40

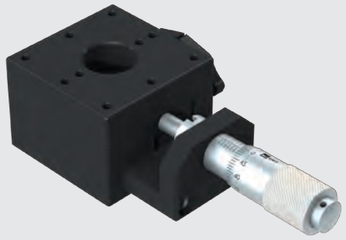

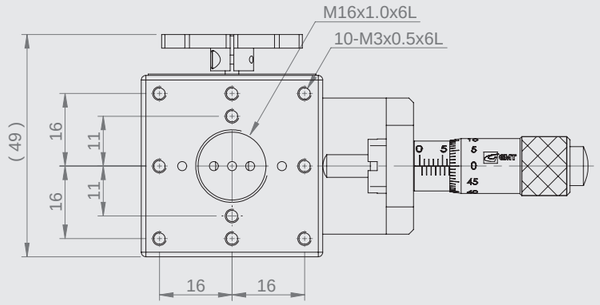

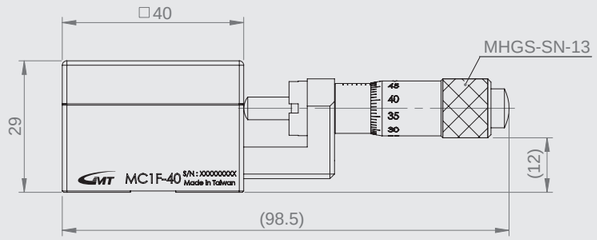

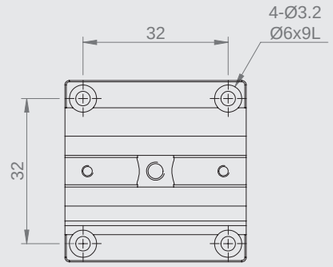

Specification

Unit: mm

Model no.	Table size	Axis	Feed position	Travel stroke	Micrometer minimum reading	Moment Accuracy Straightness	Allowable Loading (kgf)	Weight kg	Material	Surface finish
MC1F-40	40*40	X axis	central	±10	10 μm	30 μm	3	0.17	Aluminum alloy	Black anodized

MNG1E-20CL

MNG1E-25CL

MNG1E-40CL

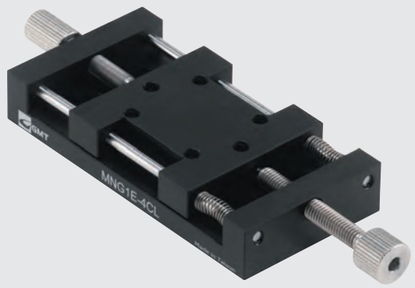

MNG1E-60CL

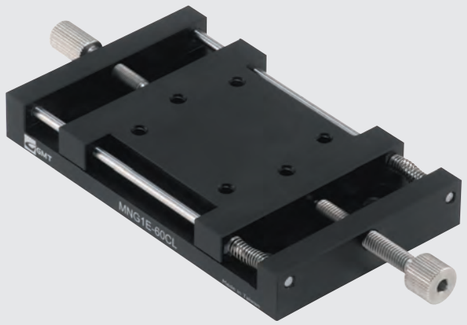

Specification

Unit: mm

Model no.	Table size	Axis	Travel stroke	Minimum reading	Allowable Loading (kgf)	Weight kg	Material	Surface finish
MNG1E-20CL	20*20	X axis	±5	0.5 mm	0.2	0.038	Aluminum alloy	Black anodized
MNG1E-25CL	25*25					0.055		
MNG1E-40CL	40*40		±7.5		1.5	0.104		
MNG1E-60CL	60*60					0.193		

★ One revolution of the feeding screw knob moves 0.5mm stroke.

Simplified stage ▶ X axis ▶ Feeding Screw type
Simplified stage | X axis
GMT GLOBAL INC.
Simplified stage
X axis

MNG1E-20CL

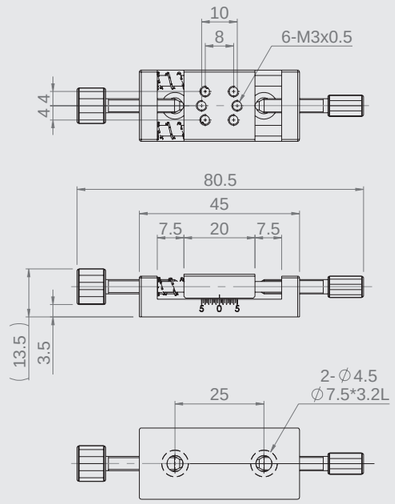

MNG1E-25CL

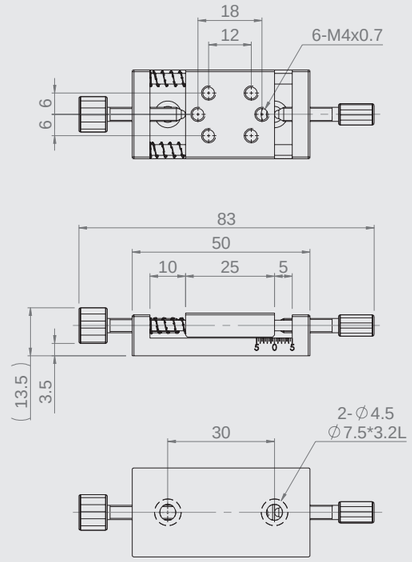

MNG1E-40CL

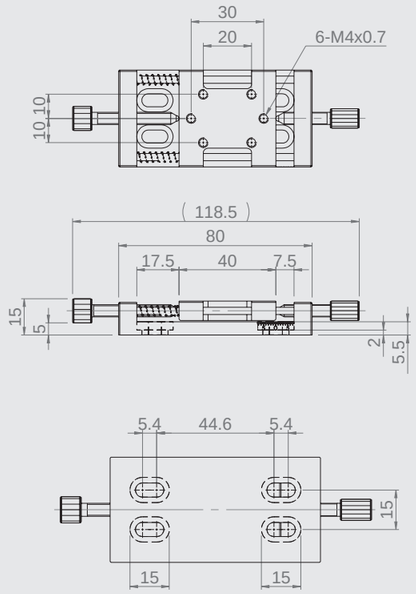

MNG1E-60CL

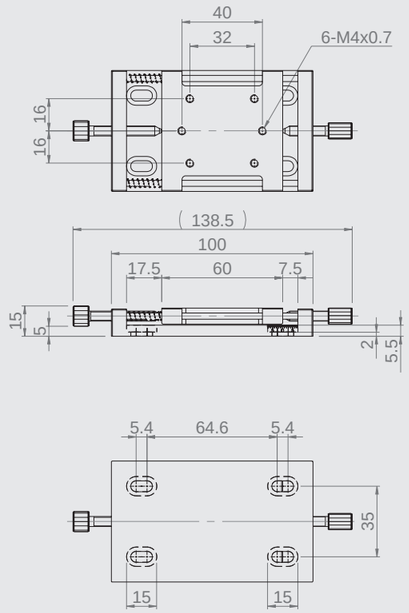

MNG2E-20CL

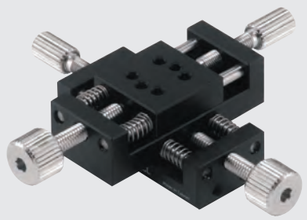

MNG2E-25CL

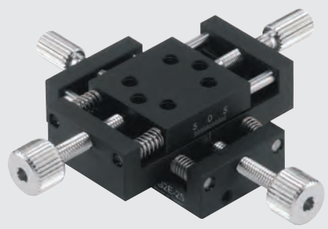

MNG2E-40CL

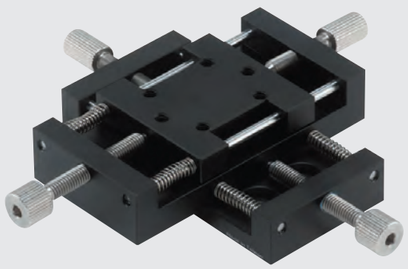

MNG2E-60CL

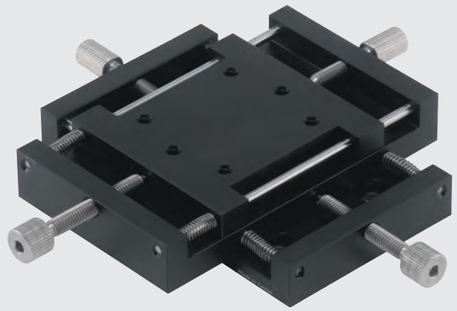

Specification

Unit: mm

Model no.	Table size	Axis	Travel stroke	Minimum reading	Allowable Loading (kgf)	Weight kg	Material	Surface finish
MNG2E-20CL	20*20	XY-axis	±5	0.5 mm	1	0.038	Aluminum alloy	Black anodized
MNG2E-25CL	25*25					0.055		
MNG2E-40CL	40*40		±7.5		1.5	0.202		
MNG2E-60CL	60*60					0.358		

★ One revolution of the feeding screw knob moves 0.7mm stroke.

MNG2E-20CL

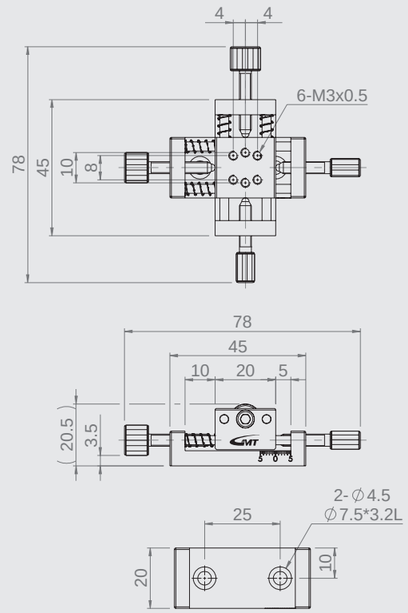

MNG2E-25CL

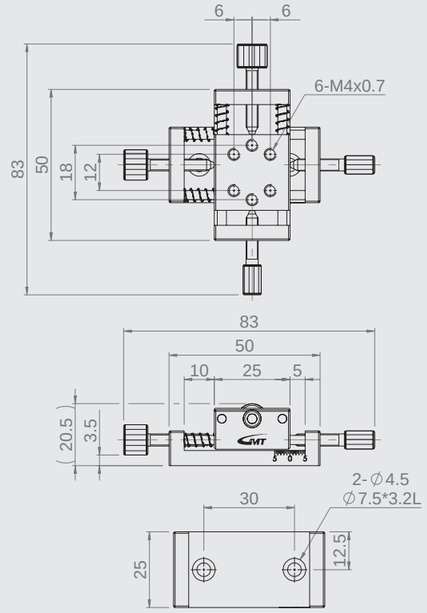

MNG2E-40CL

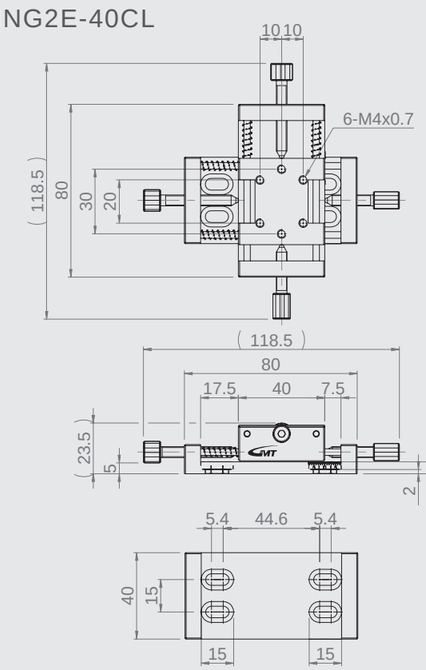

MNG2E-60CL

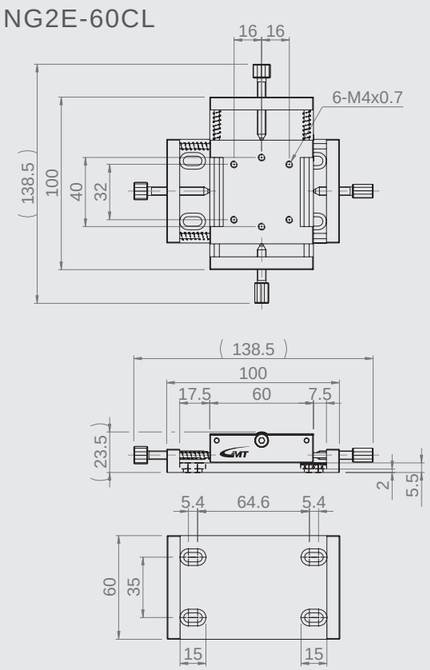

MNE1E-20

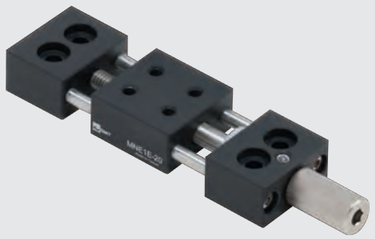

MNE1E-25

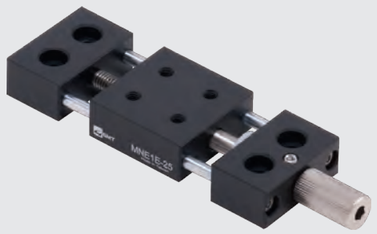

MNE1E-40

MNE1E-60

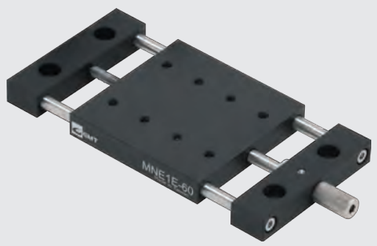

Specification

Unit: mm

Model no.	Table size	Axis	Travel stroke	Movement per knob rotation	Allowable Loading (kgf)	Weight kg	Material	Surface finish
MNE1E-20	20*20	X axis	±7	0.7 mm	2	0.039	Aluminum alloy	Black anodized
MNE1E-25	25*25					0.049		
MNE1E-40	40*40		±9		4	0.104		
MNE1E-60	60*60		±13			0.176		

MNE1E-20

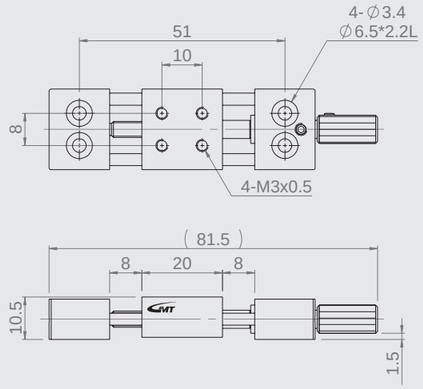

MNE1E-25

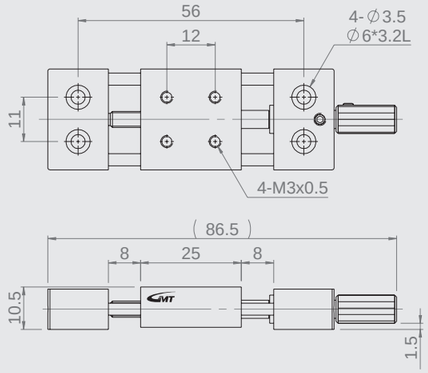

MNE1E-40

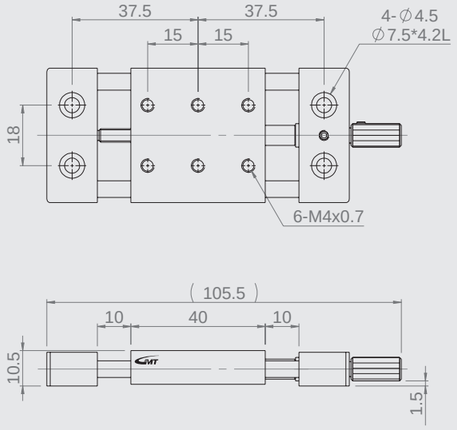

MNE1E-60

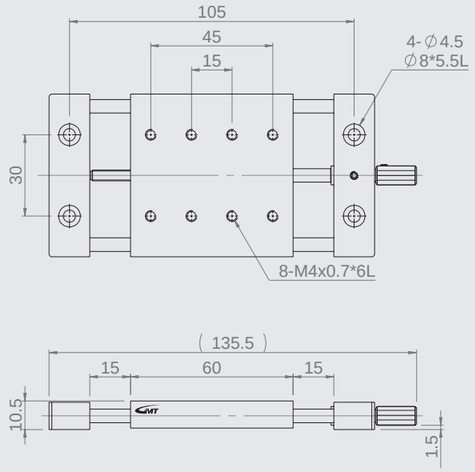

MNE2E-20

MNE2E-25

MNE2E-40

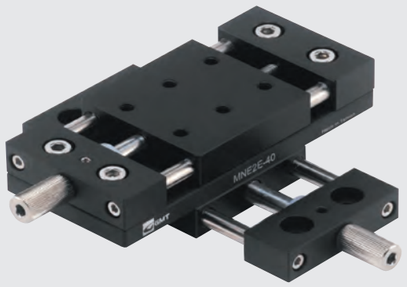

MNE2E-60

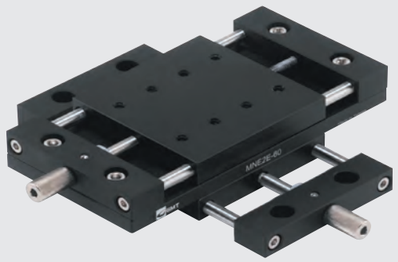

Specification

Unit: mm

Model no.	Table size	Axis	Travel stroke	Movement per knob rotation	Allowable Loading (kgf)	Weight kg	Material	Surface finish
MNE2E-20	20*20	X axis	±7	0.7 mm	1.9	0.1	Aluminum alloy	Black anodized
MNE2E-25	25*25					0.13		
MNE2E-40	40*40		±9		3.7	0.27		
MNE2E-60	60*60		±13			0.48		

MNE2E-20

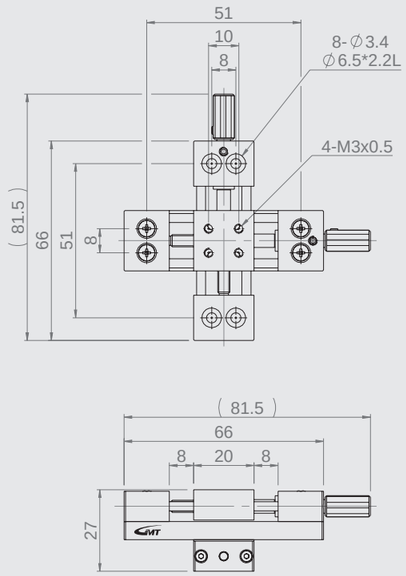

MNE2E-25

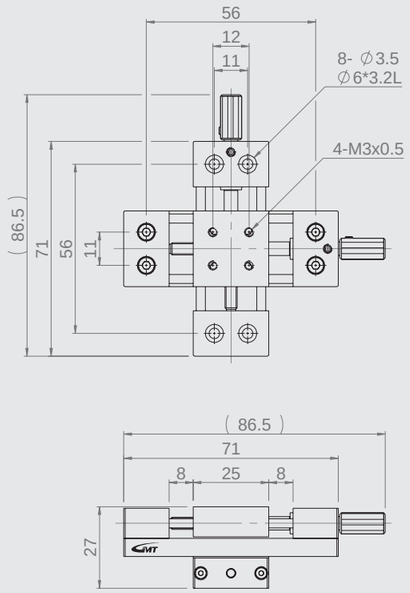

MNE2E-40

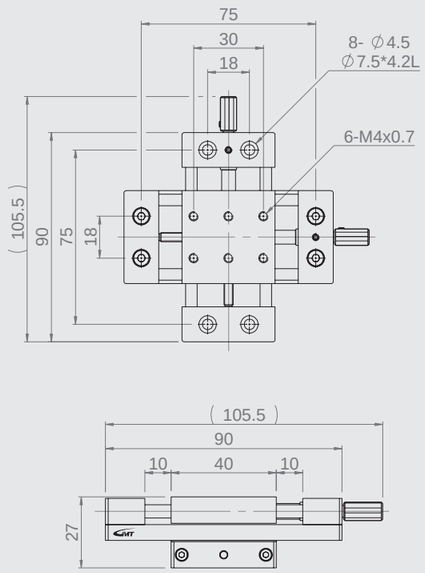

MNE2E-60

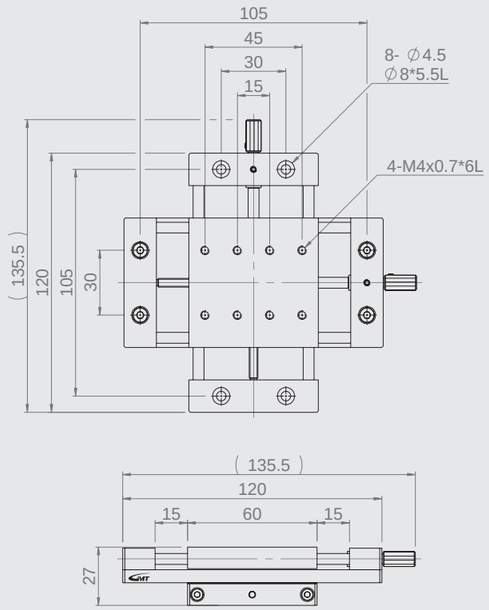

Thread knob type

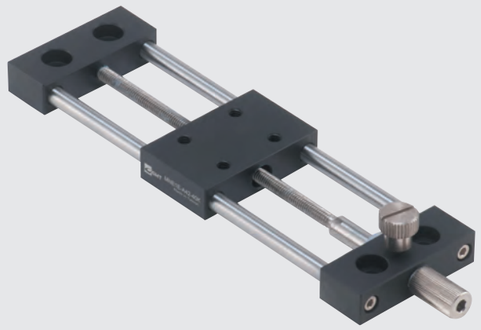

Set screw type

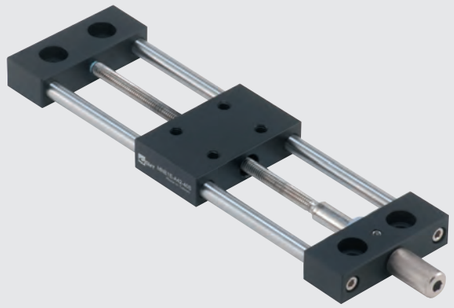

Unit: mm

Specification

Model no.			Z (Stroke options)	Allowable Loading (kgf)	C	Position fixing type
				Part name: Body / Lead axle / Knob / Feeding screw		
				Material: A6063 / SUS 304 / SUS 303 / SUS 304		
Model no.	Thickness (T)	Table size code (E1*E2)				
MNE1E	A(10)	44 (40*40)	10, 25, 40, 60	(Z=10, 25) 4 kgf	15 mm	S (Set screw) K (Thread knob)
		42 (40*25)		(Z=40, 60) 3.5 kgf		
		66 (60*60)	15, 30, 50, 70	(Z=15, 30) 4 kgf		S (Set screw) K (Thread knob)
		64 (60*40)		(Z=50, 70) 3.5 kgf		
	B(20)	44 (40*40)	10, 25, 40, 60	(Z=10, 25) 8 kgf	25 mm	S (Set screw) K (Thread knob)
		42 (40*25)		(Z=40, 60) 7 kgf		
		66 (60*60)	15, 30, 50, 70	(Z=15, 30) 8 kgf		S (Set screw) K (Thread knob)
		64 (60*40)		(Z=50, 70) 7 kgf		

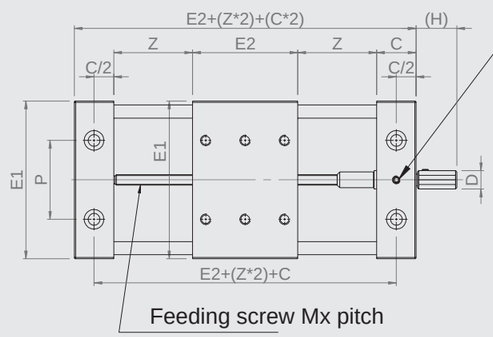

T	E1	P
10	40	18
	60	30
20	40	14
	60	30

T	d1	h1	d2
10	7.5	4.2	4.5
20	9	5.2	5.5

T	C	D	(H)	MxPitch	M1
10	15	7	16	M4xP0.7	3
20	25	10	30	M6xP1.0	4

■ Mounting type

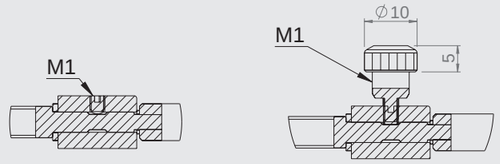

S(Standard set screw) K(Embossed knob)

■ Upper mounting hole positions

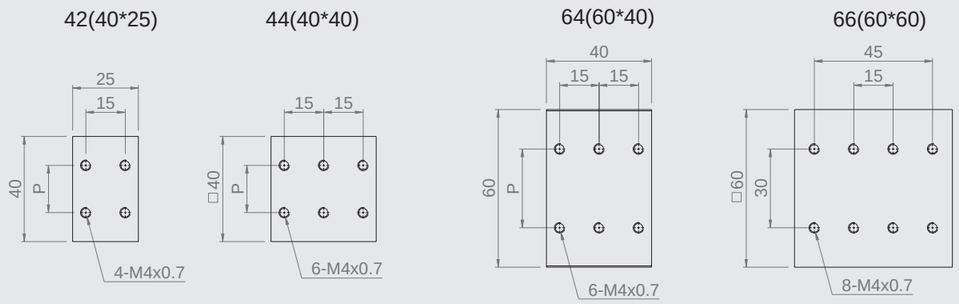

MN1A-12

MN2A-12

Specification

Unit: mm

Model no.	Table size	Axis	Travel stroke	Minimum reading	Straightness accuracy	Allowable Loading (kgf)	Weight kg	Material	Surface finish
MN1A-12	12*13	X axis	±1.7	No scale	50 μm	0.5	0.005	Aluminum alloy	Black anodized
MN1A-15	15*17		±5			1	0.02		
MN2A-12	12*13	XY-axis	±1.7			0.5	0.01		
MN2A-15	15*17		±5			1	0.04		

MN1A-12

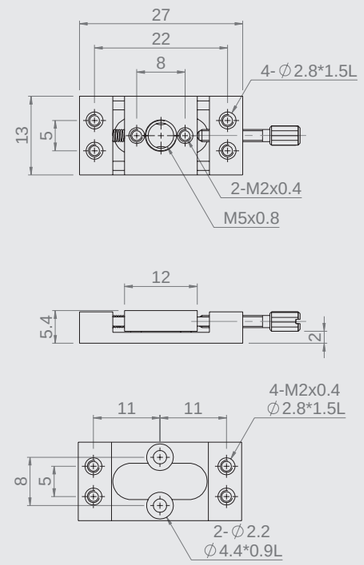

MN1A-15

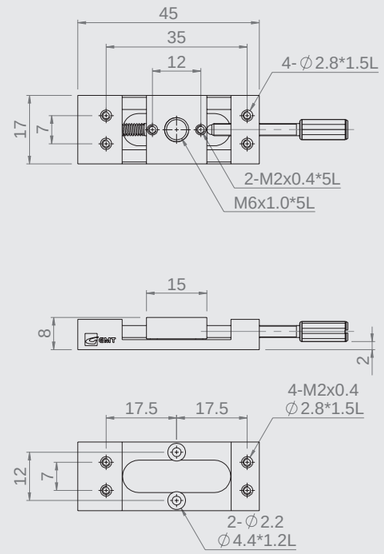

MN2A-12

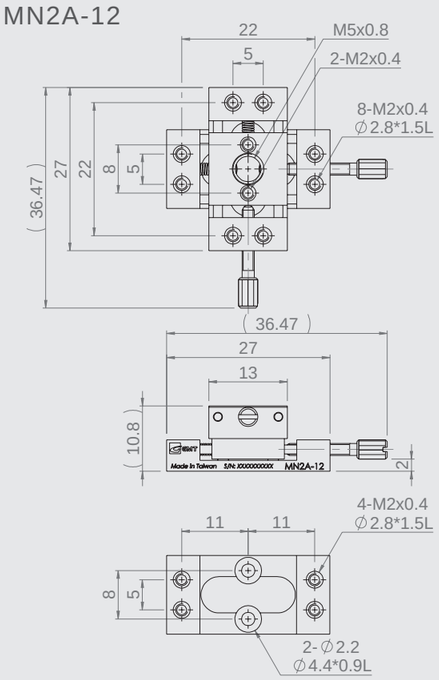

MN2A-15

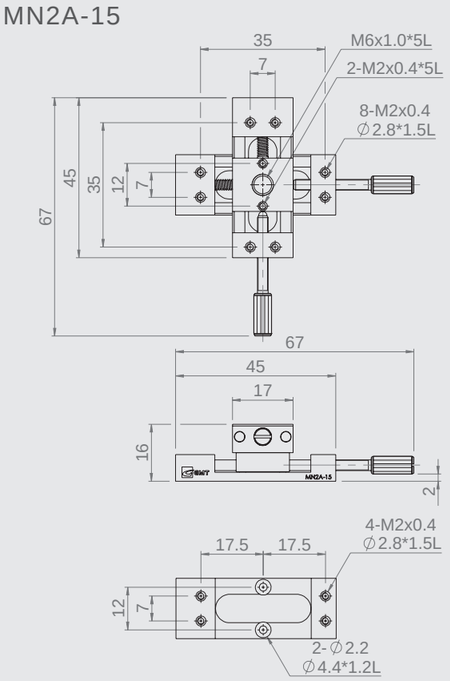

MZA-60

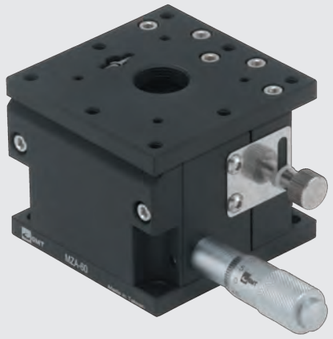

MZA-25

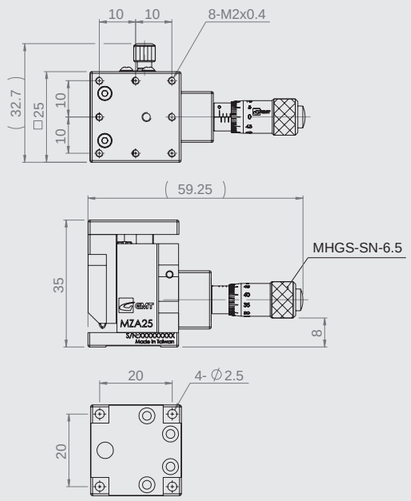

MZA-40

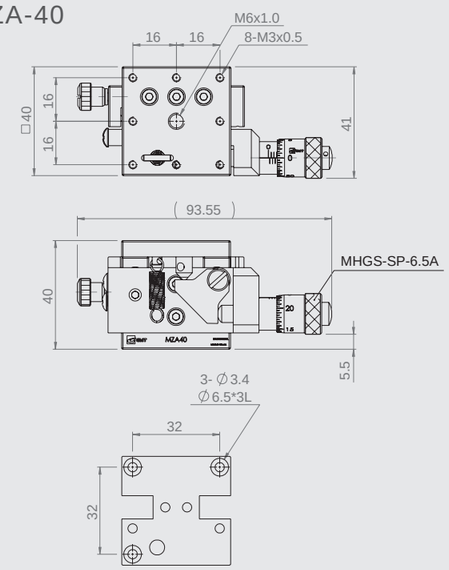

Specification

Unit: mm

Model no.	Table size	Travel stroke	Micrometer minimum reading	Parallelism	Straightness accuracy	Allowable Loading (kgf)	Weight kg	Material	Surface finish
MZA-25	25*25	± 2.0	10 μm	100 μm	3 μm	1.0	0.06	Aluminum alloy	Black anodized
MZA-40	40*40	± 3.0				1.0	0.2		
MZA-40H	40*40	± 3.0				2.0	0.2		
MZA-60L	60*60	± 3.0				2.0	0.3		
MZA-60	60*60	± 5.0				4.0	0.6		
MZA-80	80*80					3.0	1.0		

MZA-40H

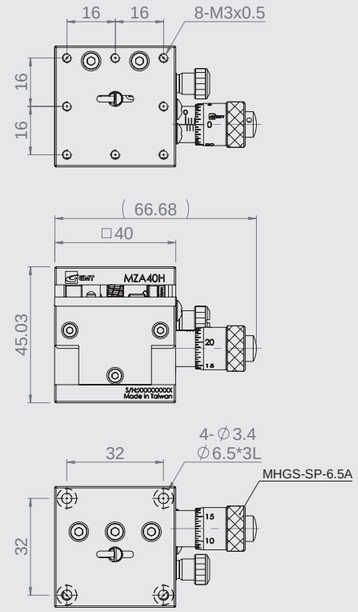

MZA-60L

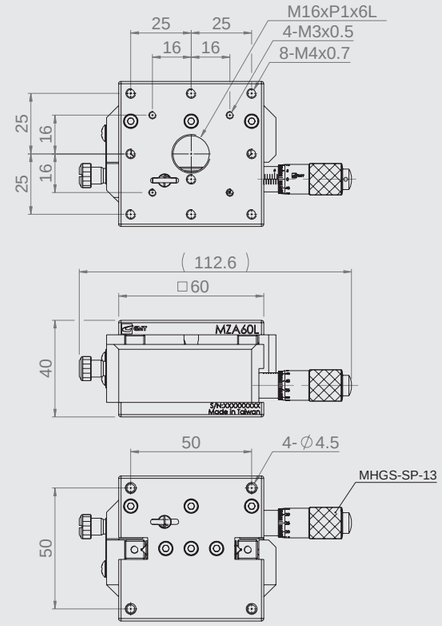

MZA-60

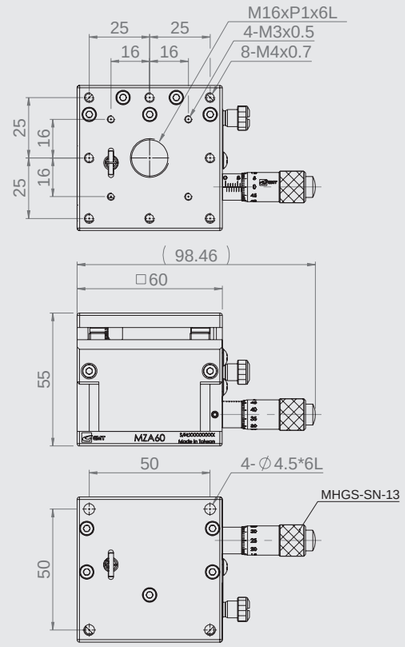

MZA-80

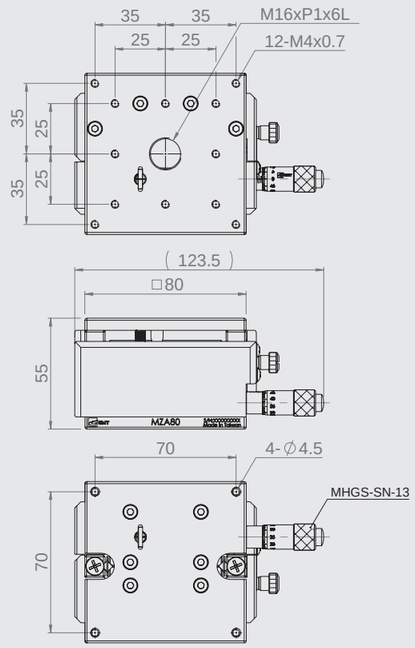

MZA1-5060

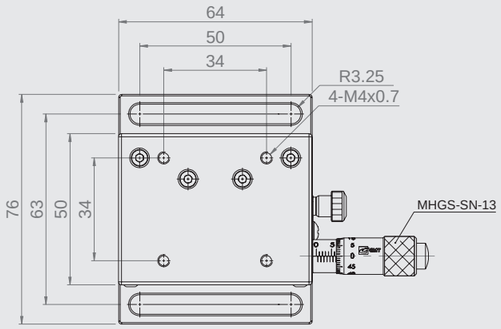

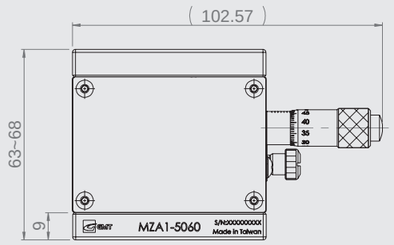

Specification

Unit: mm

Model no.	Table size	Travel stroke	Micrometer minimum reading	Horizontal Deviation of elevation	Allowable Loading (kgf)	Weight kg	Material	Surface finish
MZA1-5060	50*64	5	10 μm	0.03mm	7	0.62	Aluminum alloy	Black anodized
MZA2-5060					8	0.63		
MZA3-5060					10	0.72		

MZA2-5060

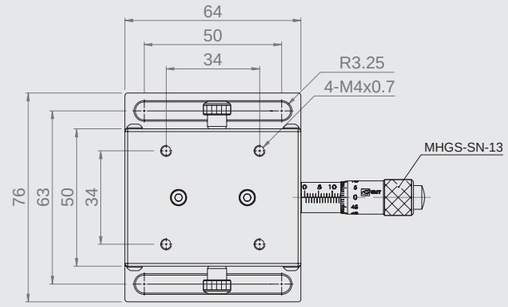

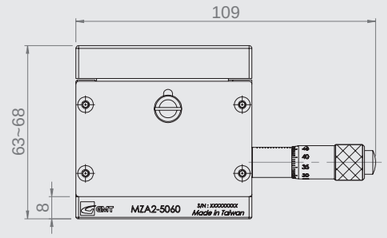

MZA3-5060

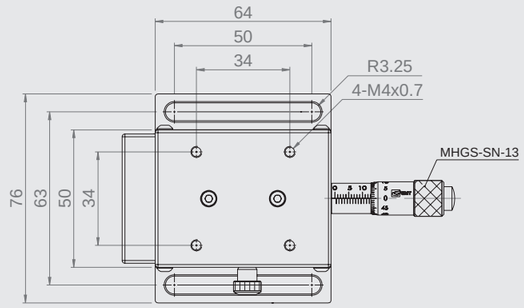

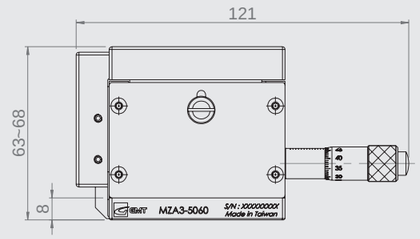

MZF-80

MZF-120

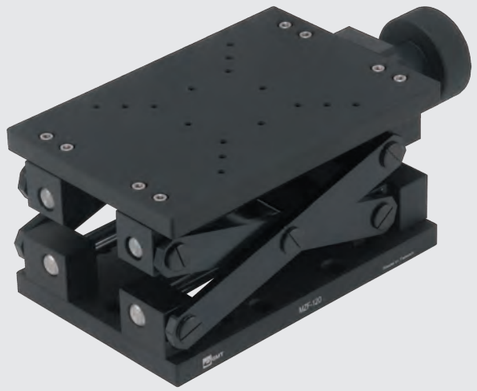

Specification

Unit: mm

Model no.	Table size	Travel stroke	Movement per knob rotation	Parallelism	Allowable Loading (kgf)	Weight kg	Material	Surface finish
MZF-80	80*120	40	2	200 μm	7.0	1.25	Aluminum alloy	Black anodized
MZF-120	120*180	70	3		10.0	3.5		

MZF-80

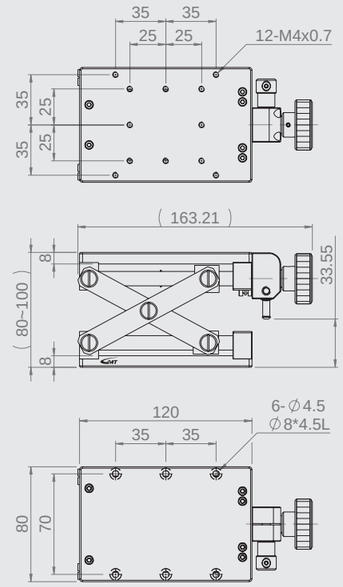

MZF-120

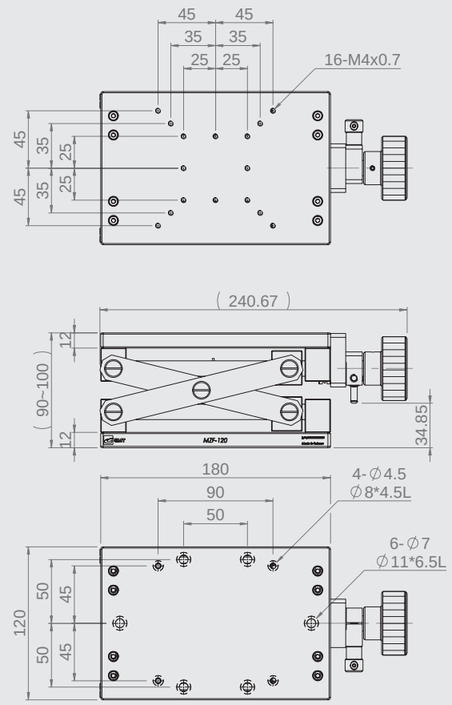

MR38-AR

MR60-AR

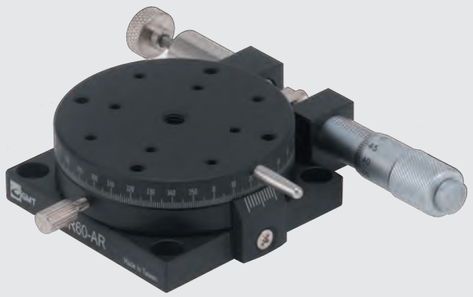

Specification

Unit: mm

Model no.	Table size	Travel stroke	Rotation Accuracy	Micrometer minimum reading	Offset (Eccentric)	Allowable Loading (kgf)	Weight kg	Material	Surface finish
MR38-AR	Ø 38	Coarse 360° Fine ± 5°	0.2°	≒ 1'26"/ Vernier	0.05	1.0	0.09	Aluminum alloy	Black anodized
MR60-AR	Ø 60			≒ 55"/ Vernier		3.0	0.28		
MR85-AR	Ø 85		0.1°	≒ 43"/ Vernier		4.0	0.48		
MR110-AR	Ø 110			≒ 34"/ Vernier		5.0	0.75		

★ MR series have been integrated with brass rotation interface.

MR38-AR

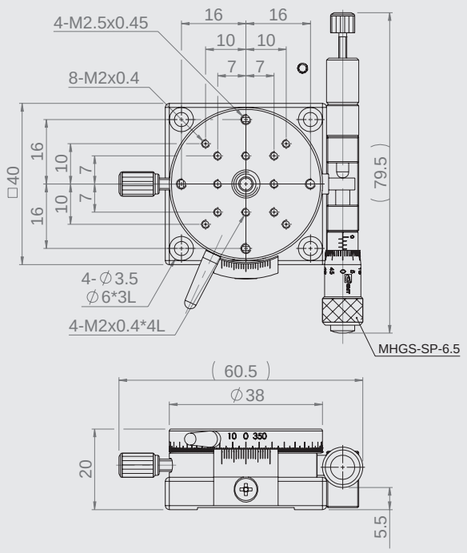

MR60-AR

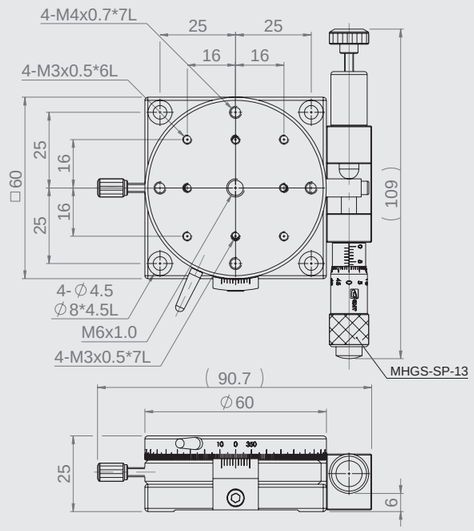

MR85-AR

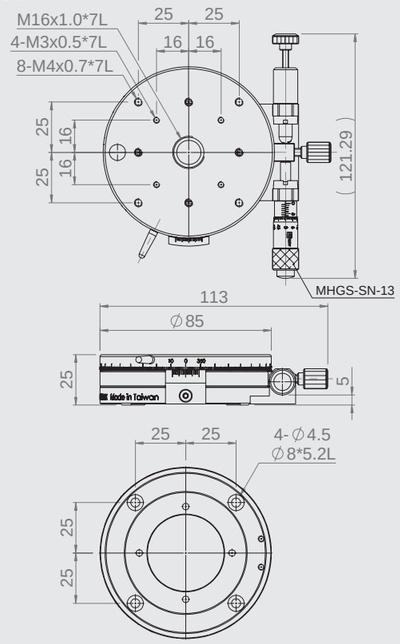

MR110-AR

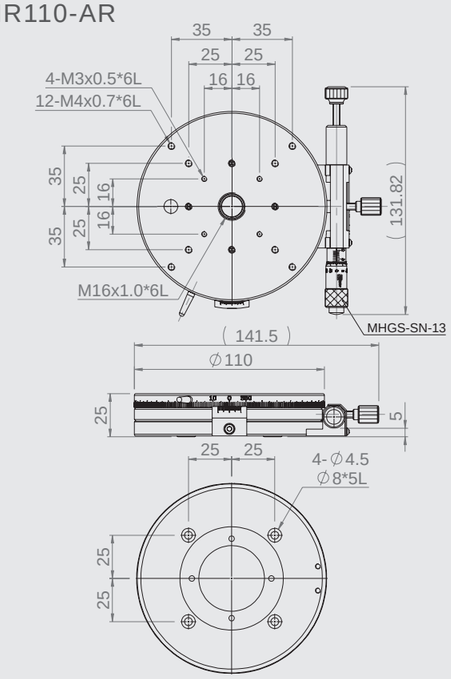

MRL30-AR

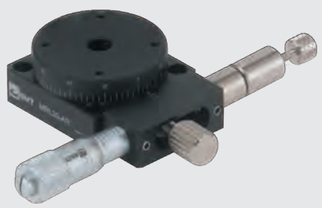

MRL60-AL

MRL125-AL

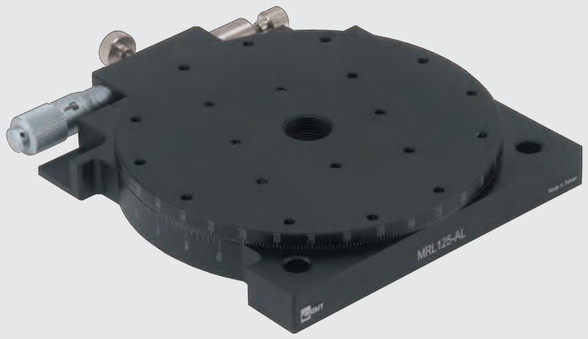

Specification

Unit: mm

Model no.	Table size	Travel stroke	Rotation Accuracy	Micrometer minimum reading	Offset (Eccentric)	Allowable Loading (kgf)	Weight kg	Material	Surface finish
MRL30-AL	Ø 30	Coarse 360° Fine ± 5°	5°	≒ 1'38"	0.02	1	0.1	Aluminum alloy	Black anodized
MRL40-AL	Ø 40		2°	≒ 1'11"	0.05	1.5	0.1		
MRL60-AL	Ø 60		1°	≒ 58"	0.04	3	0.2		
MRL90-AL	Ø 90		1°	≒ 36"	0.04	3	0.5		
MRL125-AL	Ø 125		1°	≒ 28"	0.05	3	0.9		

★ MR series have been integrated with brass rotation interface.

MRL30-AL

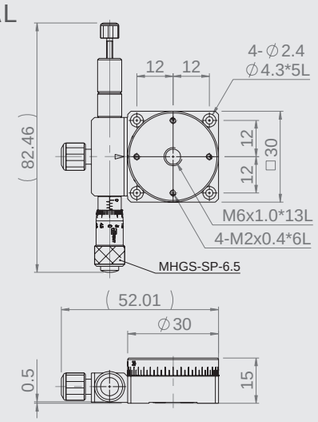

MRL40-AL

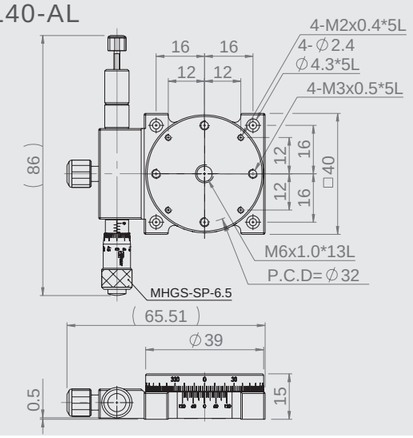

MRL60-AL

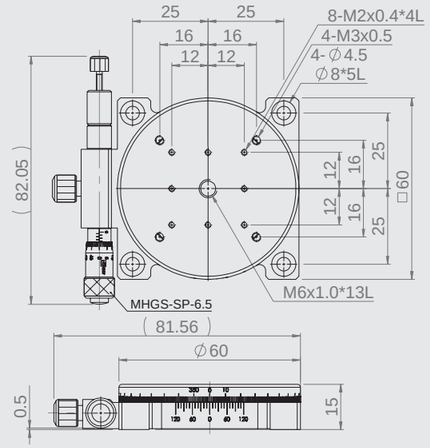

MRL90-AL

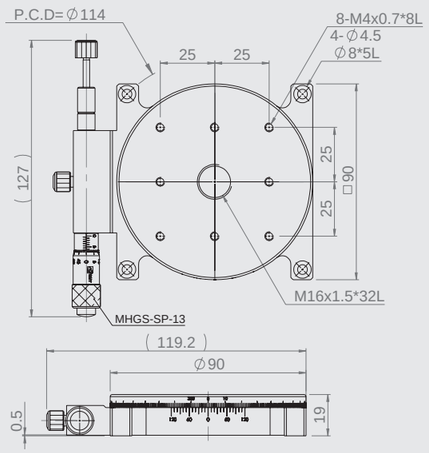

MRL125-AL

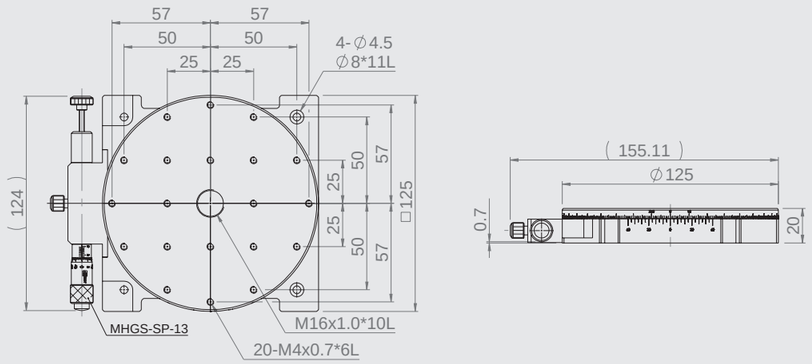

MR50-AR-48

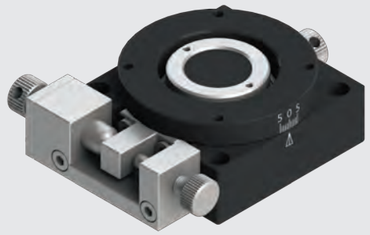

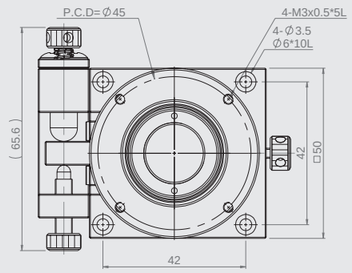

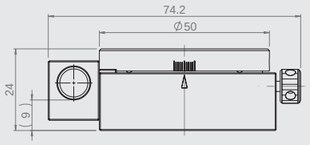

MR85-S

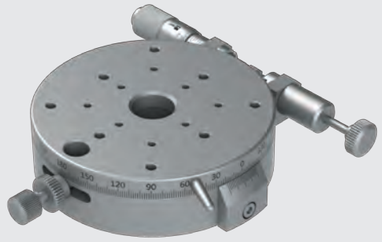

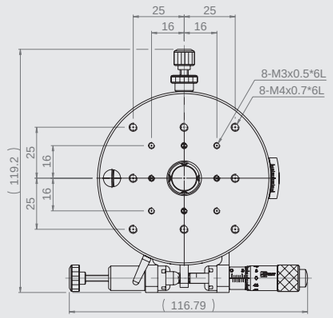

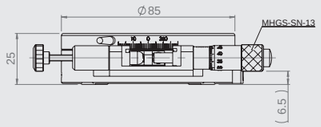

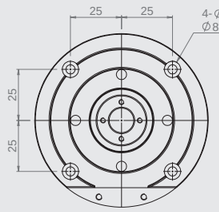

Specification

Unit: mm

Model no.	Table size	Axis	Travel stroke	Micrometer minimum reading	Offset (Eccentric)	Allowable Loading (kgf)	Weight kg	Material	Surface finish
MR50-AR-48	Ø 50	Θ axis	360˚(Coarse)	0.1˚	0.05	1.8	0.26	Aluminum alloy	Black anodized
			±5.5˚(Fine)						
MR85-S	Ø 85		360˚(Coarse)			6	1	Stainless stell	
			±5.5˚(Fine)						

★ 可用 MC1B (P.149)、MC2B (P.150)、MC4B (P.151)、MC1C (P.152) 互相組合。

★ MRE-60AL 需要有 ASAP 60°

MRE40-A

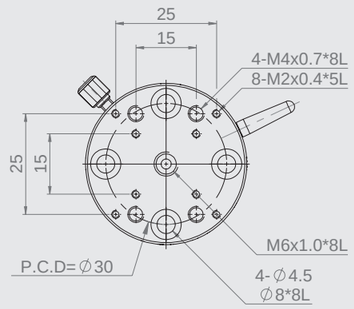

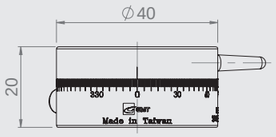

MRE60-A

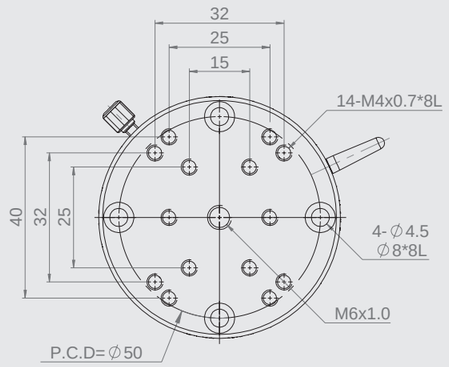

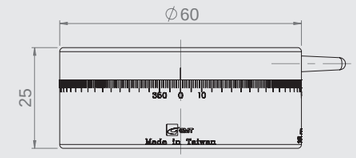

Specification

Unit: mm

Model no.	Table size	Travel stroke	Micrometer minimum reading	Offset (Eccentric)	Allowable Loading (kgf)	Weight kg	Material	Surface finish
MRE40-A	Ø 40	Coarse 360°	2°	0.05	5.0	0.14	Aluminum alloy	Black anodized
MRE60-A	Ø 60		1°		7.0	0.2		

MRE85-A

MRE110-A

MRE85-A

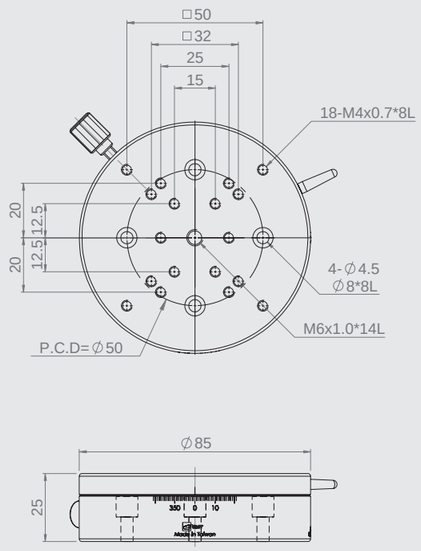

MRE110-A

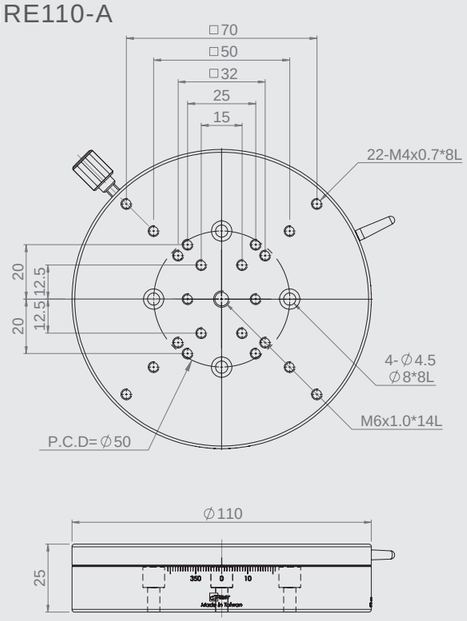

Specification

Unit: mm

Model no.	Table size	Travel stroke	Micrometer minimum reading	Offset (Eccentric)	Allowable Loading (kgf)	Weight kg	Material	Surface finish
MRE85-A	Ø 85	Coarse 360°	1°	0.05	8	0.4	Aluminum alloy	Black anodized
MRE110-A	Ø 110				9	0.66		

MMT-38

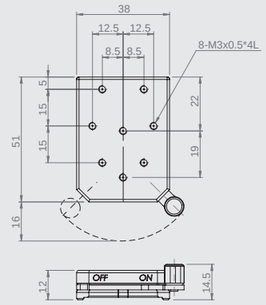

MMT-52

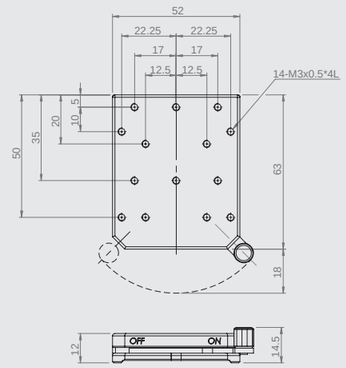

MMT-66

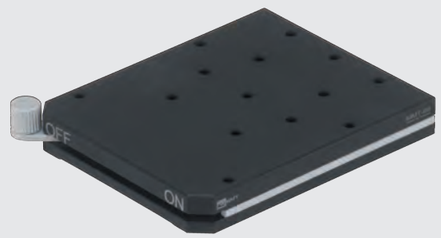

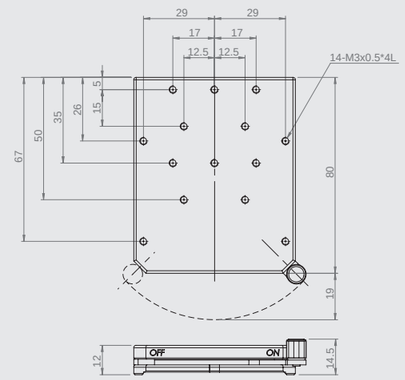

Specification

Unit: mm

Model no.	Table size	Magnetic kgf	Parallelism	Weight kg	Material	Surface finish
MMT-38	12*38*51	1.0	0.015	0.3	Carbon steel	Black Zinc plated
MMT-52	12*52*63	3.3	0.02	0.6		
MMT-66	12*66*80	3.8	0.02	1.2		

★ Mounting holes not matched with SPEC, customized size is acceptable additionally.

MMS-45

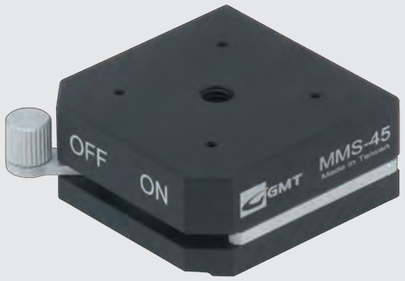

MMS-65

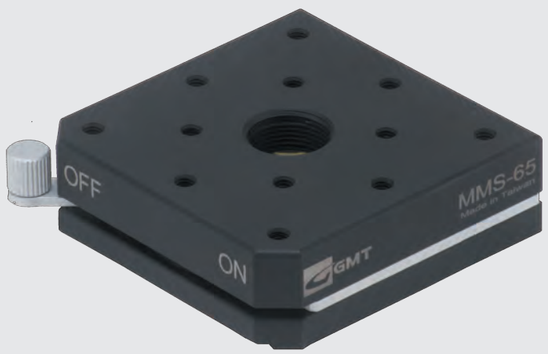

Specification

Unit: mm

Model no.	Table size	Magnetic kgf	Parallelism	Weight kg	Material	Surface finish
MMS-45	20*45*45	17.0	0.015	0.3	Carbon steel	Black zinc plated
MMS-65	20*65*65	20.0	0.02	0.6		
MMS-90	20*90*90	25.0	0.02	1.2		
MMS-125	20*125*125	70.0	0.02	2.8		

MMS-45

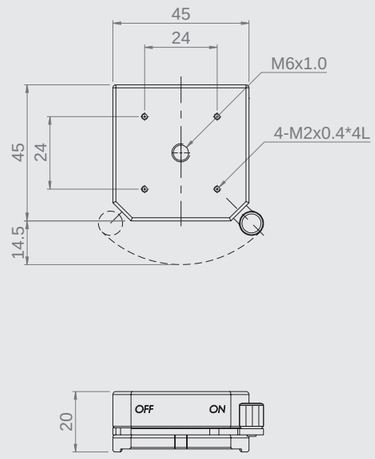

MMS-65

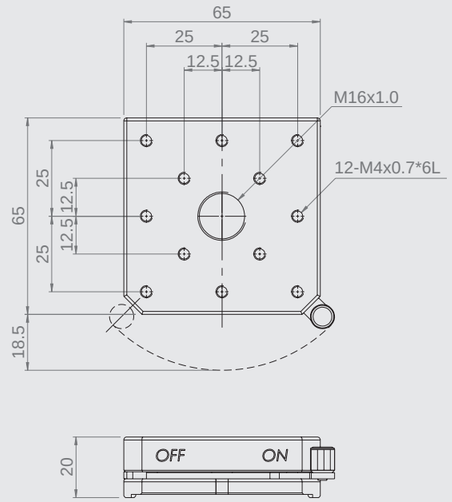

MMS-90

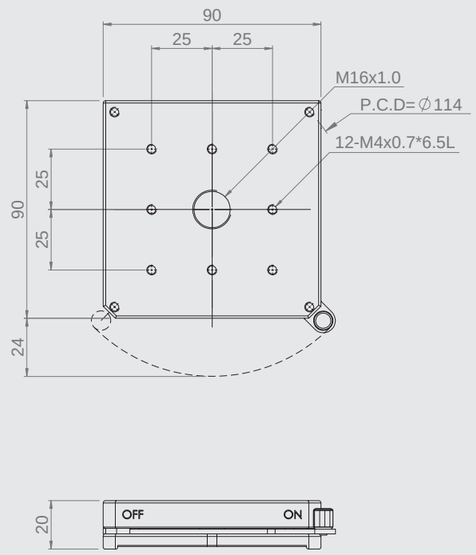

MMS-125

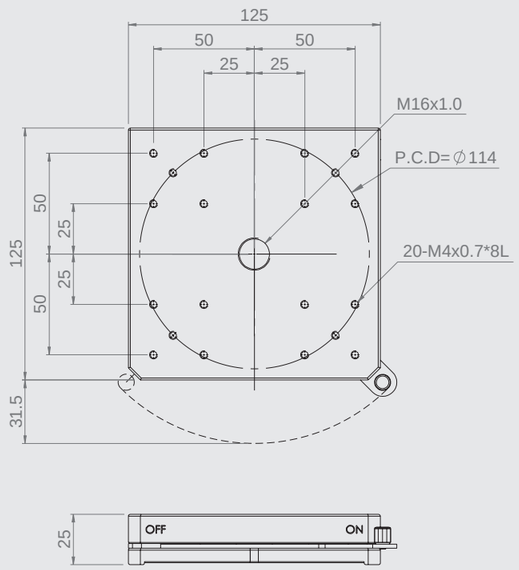

MTB-80

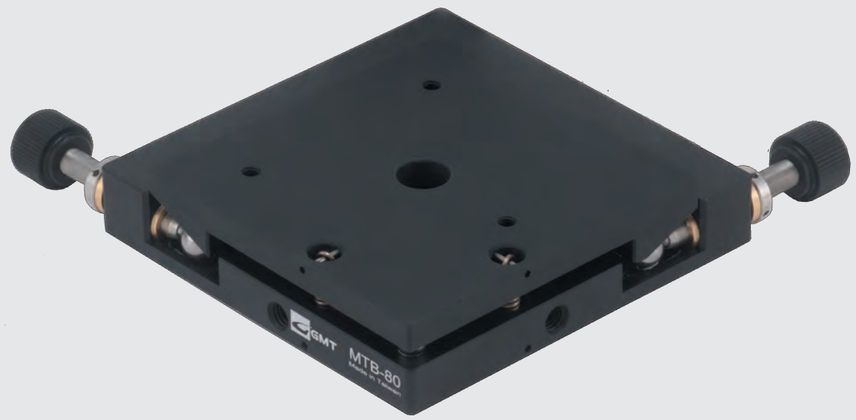

Specification

Unit: mm

Model no.	Table size	Movement direction	Transmission	Travel stroke	Allowable Loading (kgf)	Weight kg	Material	Surface finish
MTB-40	40*40	2 directions	0.54° per manual rotation	±2°	2.0	0.03	Aluminum alloy	Black anodized
MTB-60	60*60				4.0	0.15		
MTB-80	80*80				5.0	0.4		

★ Additional mounting hole out of standard may be ordered on request.

MTB-40

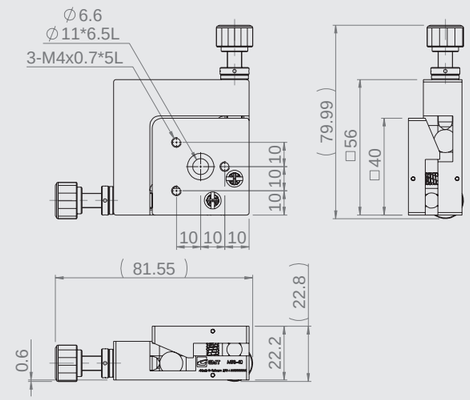

MTB-60

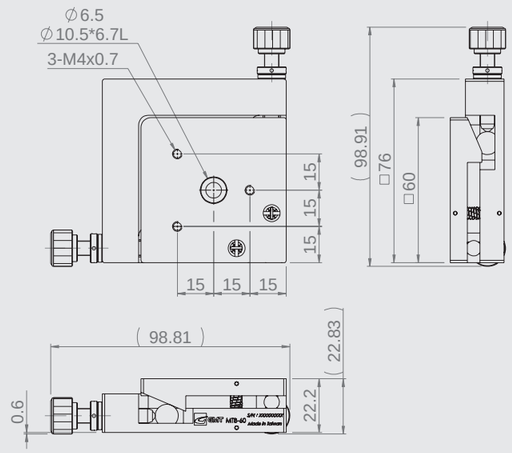

MTB-80

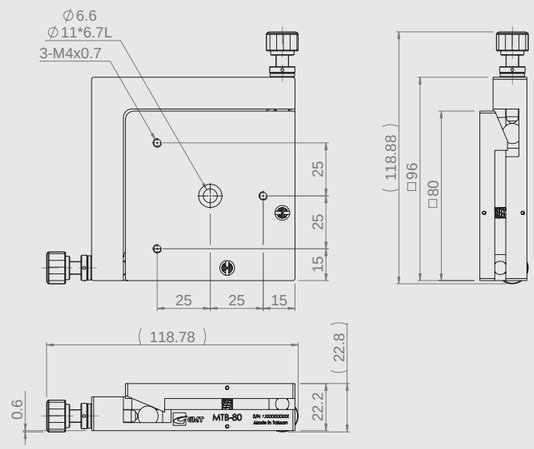

MTS-30

MTS-60

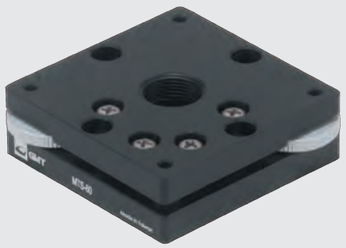

MTS-90

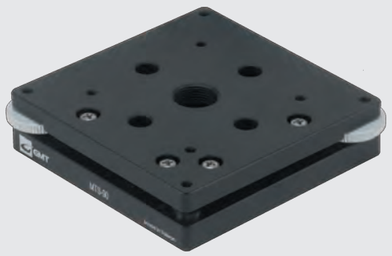

MTS-125

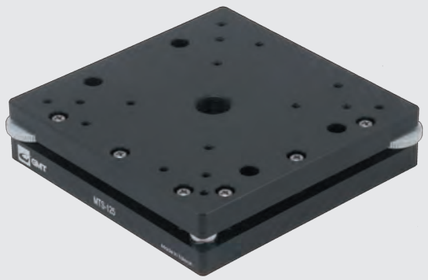

Specification

Unit: mm

Model no.	Table size	Travel direction	Transmission	Travel stroke	Allowable Loading (kgf)	Weight kg	Material	Surface finish
MTS-30	30*30	2 directions	1° 25' per manual rotation	±2°	2.0	0.03	Aluminum alloy	Black anodized
MTS-60	60*60		0° 40' per manual rotation		4.0	0.15		
MTS-90	90*90		0° 24' per manual rotation		5.0	0.4		
MTS-125	125*125		0° 15' per manual rotation		5.0	1.0		

MTS-30

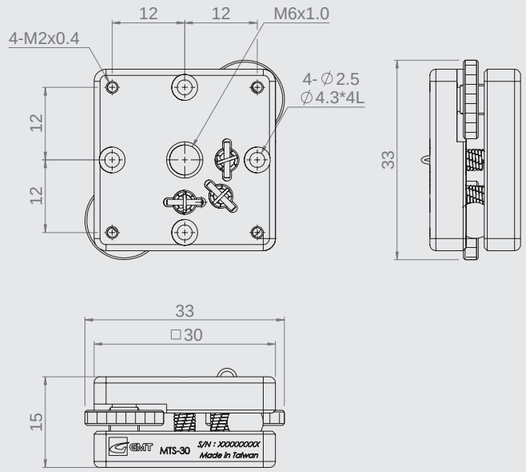

MTS-60

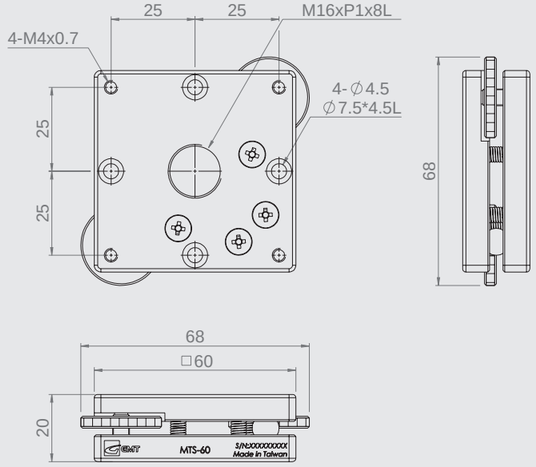

MTS-90

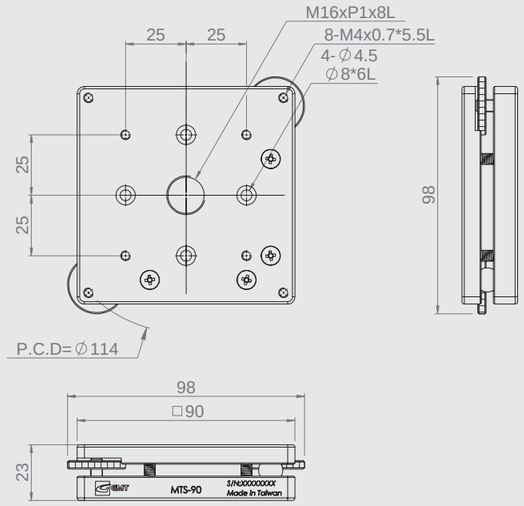

MTS-125

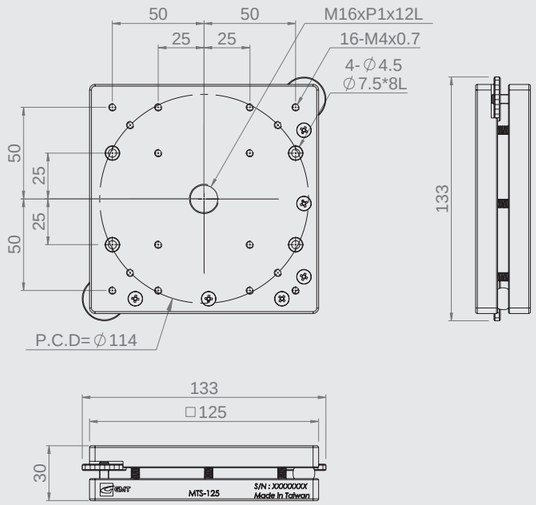

AZB40-1

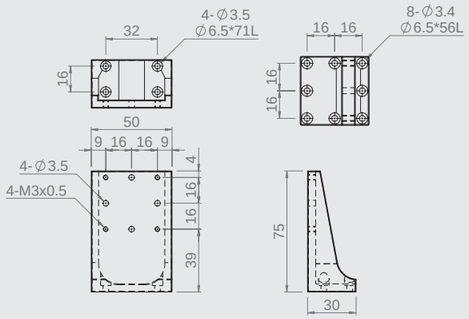

AZB40-2

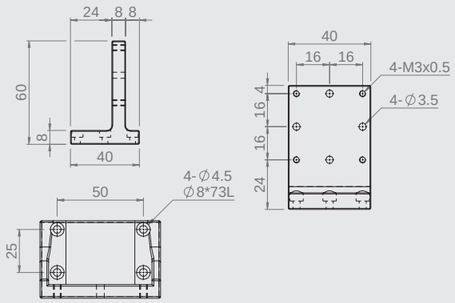

AZB60-1

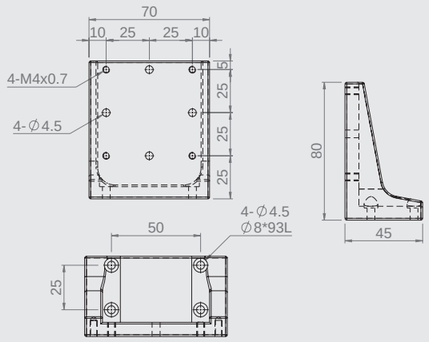

AZB80-1

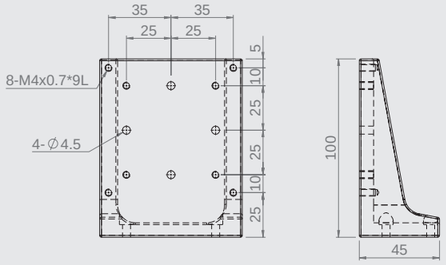

AZB80-2

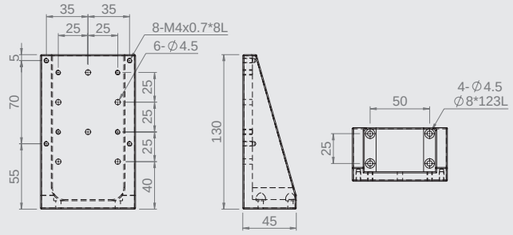

AZB100-1

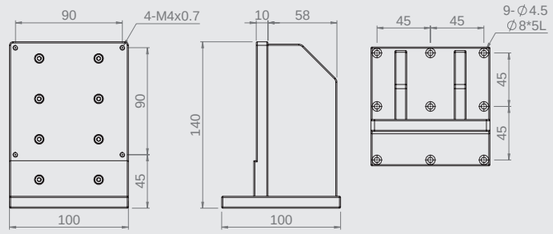

AZB120-1

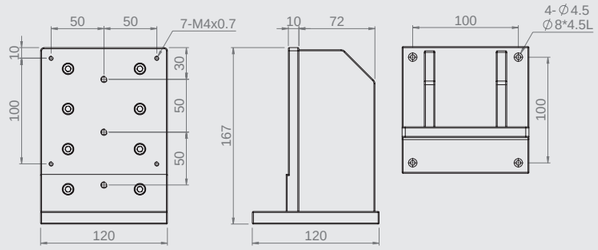

Specification

Unit: mm

Model no.		Transmission Direction					Weight
Aluminum+Black anodized	S50C+Nickel plating	CZ	SZ	SRZ	SR	S	kg
AZB40-1	AZB40-1-N	●			●	●	0.08
AZB40-2	AZB40-2-N		●	●			0.07
AZB60-1	AZB60-1-N	●	●	●	●	●	0.19
AZB80-1	AZB80-1-N	●	●	●			0.29
AZB80-2	AZB80-2-N				●	●	0.41
AZB100-1	AZB100-1-N	●	●	●	●	●	1.04
AZB120-1	AZB120-1-N	●	●	●	●	●	1.80

ASAP-40

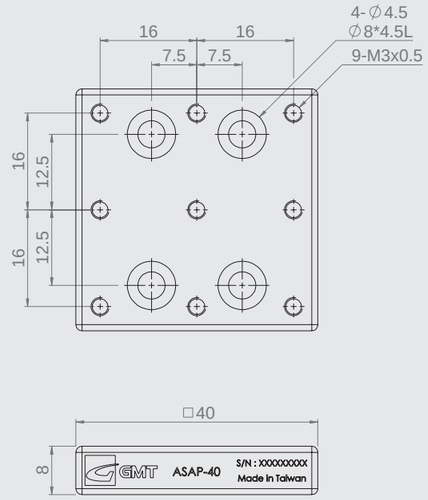

ASAP-60

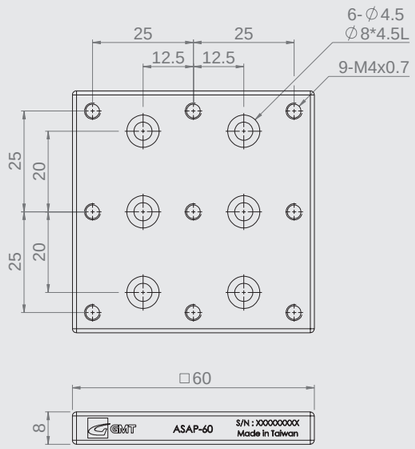

ASAP-80

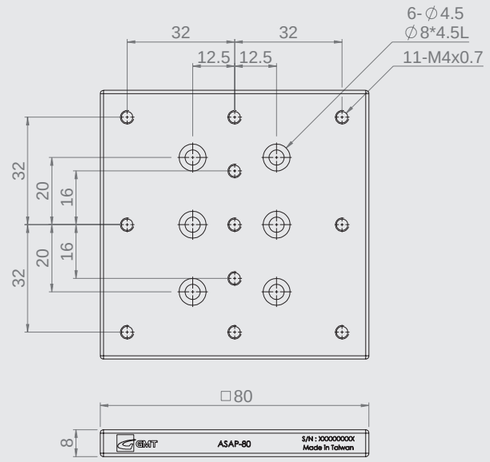

Specification

Unit: mm

Model no.	Table size	Material	Surface finish	Available for GMT stage models
ASAP-40	40*40	Aluminum alloy	Black anodized	MC1B-40, MC2B-40, MC4B-40
ASAP-60	60*60			MC1B-60, MC1B-90, MC1B-140
ASAP-80	80*80			MC2B-60, MC2B-90, MC4B-60, MC4B-90

AIB-□-120-120

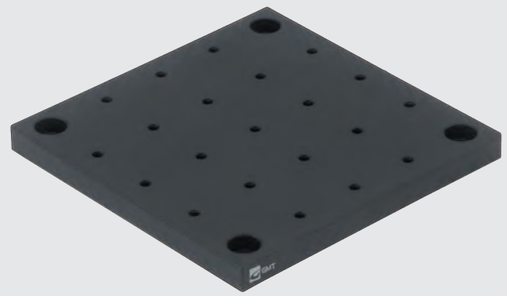

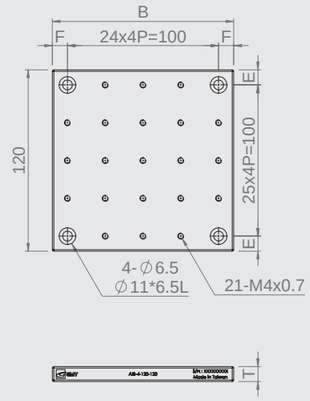

AIB-□-120-200

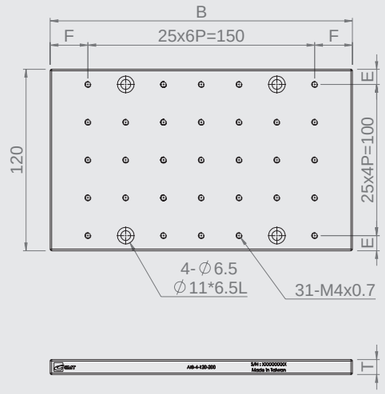

AIB-□-120-300

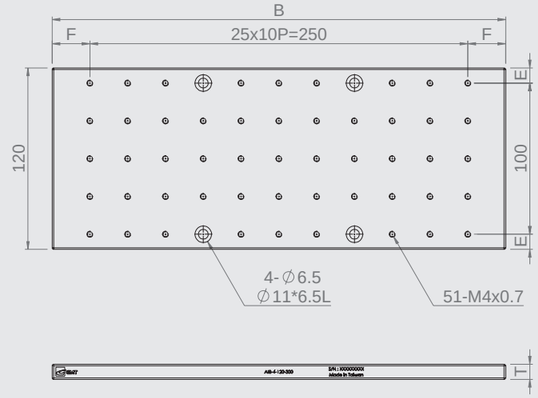

Specification

Unit: mm

Model no.		A	B	Hole numbers	T	E	F	Material	Surface finish
M4	M6								
AIB-4-120-120	AIB-6-120-120	120	120	21	10	10	10	Aluminum alloy	Black anodized
AIB-4-120-200	AIB-6-120-200		200	31			25		
AIB-4-120-300	AIB-6-120-300		300	51					
AIB-4-150-150	AIB-6-150-150	150	150	21		25			
AIB-4-150-200	AIB-6-150-200		200	31					
AIB-4-150-300	AIB-6-150-300		300	51					
AIB-4-200-200	AIB-6-200-200	200	200	45					
AIB-4-200-300	AIB-6-200-300		300	73					

★ 4 * M6 mounting holes have been initially set to 100 mm area on the middle of the plate.

★ Available for precision stage, and mounting plate for mounting to the anti-shake platform.

Model no. description

M X G 4 - 60 C S

Transmission	Axis no.	Axis dirction	Table size	Height of rotation center	Slide way	Feeding specification
M: Manual	X: Single axis Y: Dual axes	G: α & β axis	4 : 40 6 : 60	Per dimension table	V: V groove rails C: Dovetail	E: Leadscrew S: Warm warm gears M: Micrometer

MXG4-40CS

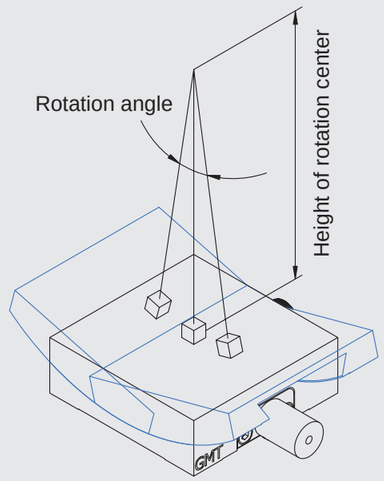

Specification

Unit: mm

Model no.	Table size	Height of rotation center	Travel stroke	Minimum reading	Stroke per revolution	Allowable Loading (kgf)	Weight kg	Material	Surface finish
MXG4-25CS	40*40	25	± 20°	0.1°/ Vernier	≒ 2.2°	3.0	0.18	Brass Alloy	Black fluororesin
MXG4-40CS		40	± 15°		≒ 1.89°		0.24		
MXG4-60CS		60	± 10°		≒ 1.33°				
MXG6-35CS	60*60	35	± 25°		≒ 2.0°	6.0	0.69		
MXG6-60CS		60	± 20°		≒ 1.3°		0.55		
MXG6-80CS		80	± 15°		≒ 1.0°				

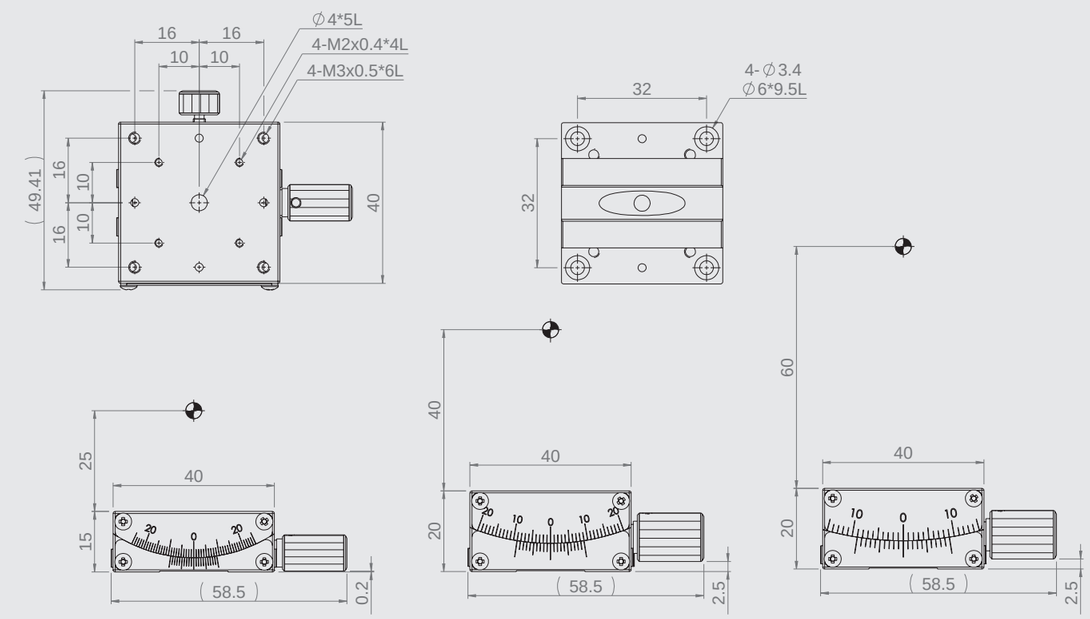

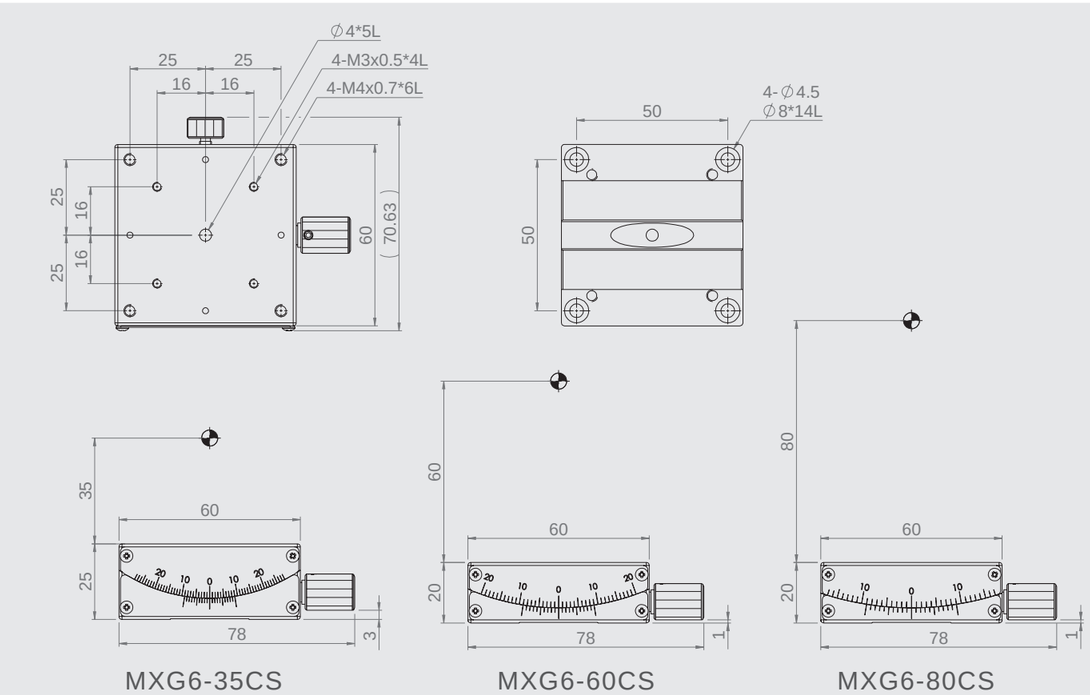

MYG4-40CS

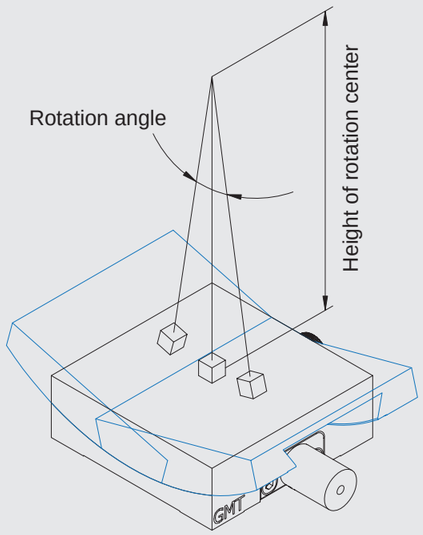

Specification

Unit: mm

Model no.	Table size	Height of rotation center	Travel stroke	Minimum reading	Stroke per revolution	Allowable Loading (kgf)	Weight kg	Material	Surface finish
MYG4-25CS	40*40	25	Up axis ± 20° Lower axis ± 15°	0.1°/ Vernier	Up axis ≒2.2° Lower axis ≒1.89°	2.8	0.42	Brass Alloy	Black fluororesin
MYG4-40CS		40	Up axis ± 15° Lower axis ± 10°		Up axis ≒1.89° Lower axis ≒1.33°	2.7	0.48		
MYG6-35CS	60*60	35	Up axis ± 25° Lower axis ± 20°		Up axis ≒2.0° Lower axis ≒1.3°	5.3	1.24		
MYG6-60CS		60	Up axis ± 20° Lower axis ± 15°		Up axis ≒1.3° Lower axis ≒1.0°	5.4	1.10		

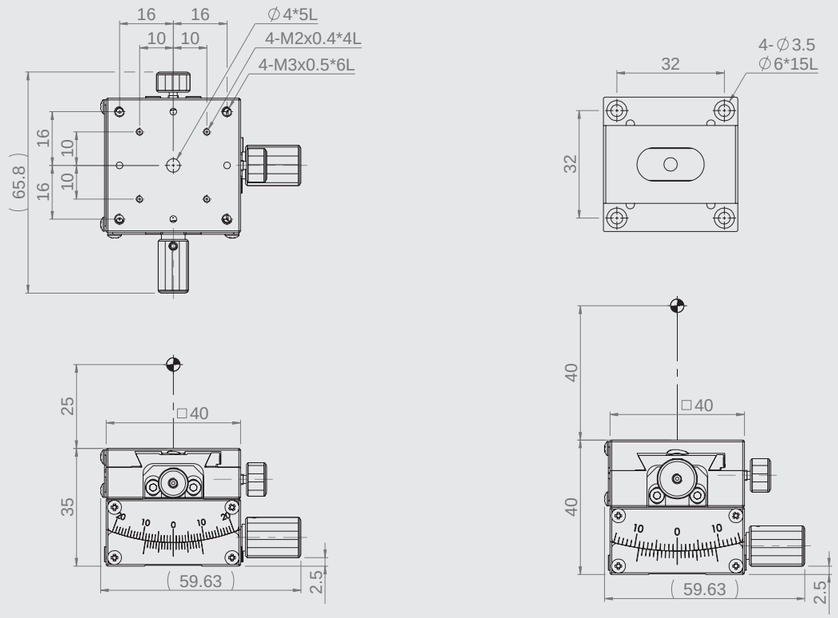

MYG4-25CS MYG4-40CS

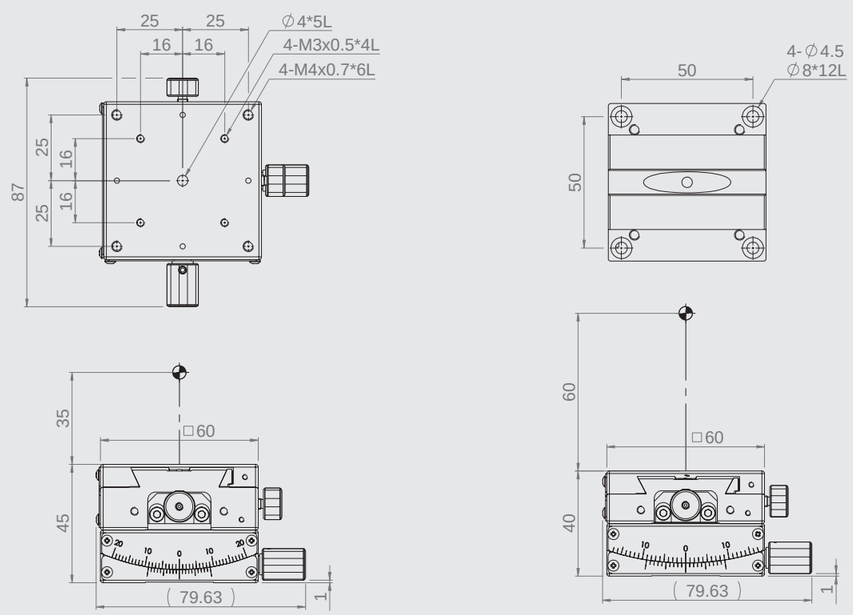

MYG6-35CS MYG4-60CS

MXG5-□CS参考外型 【單軸】

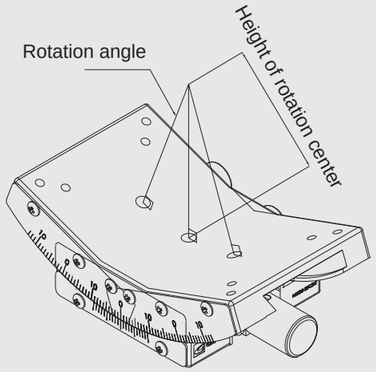

MYG5-□CS参考外型 【雙軸】

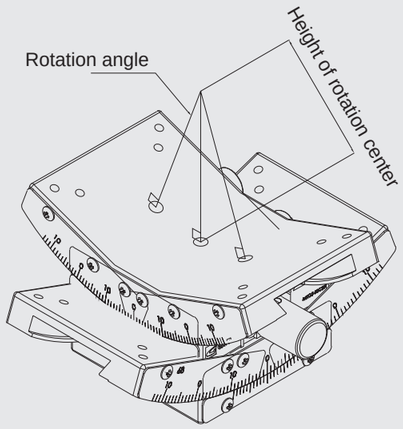

Specification

Unit: mm

Model no.	Table size	Axis	Height of rotation center	Travel stroke	Minimum reading	Stroke per revolution	Allowable Loading (kgf)	Weight kg	Material	Surface finish
MXG5-50CS	50*50	α	50	± 10°	0.1°/ Vernier	≒1.55°	3	0.36	Brass Alloy	Black fluororesin
MXG5-68CS			68	± 10°		≒1.2°				
MXG5-86CS			86	± 8°		≒0.97°				
MYG5-50CS		αβ	50	Up axis ± 10° Lower axis ± 10°		Up axis ≒1.55° Lower axis ≒1.2°		0.71		
MYG5-68CS			68	Up axis ± 10° Lower axis ± 8°		Up axis ≒1.2° Lower axis ≒0.97°				

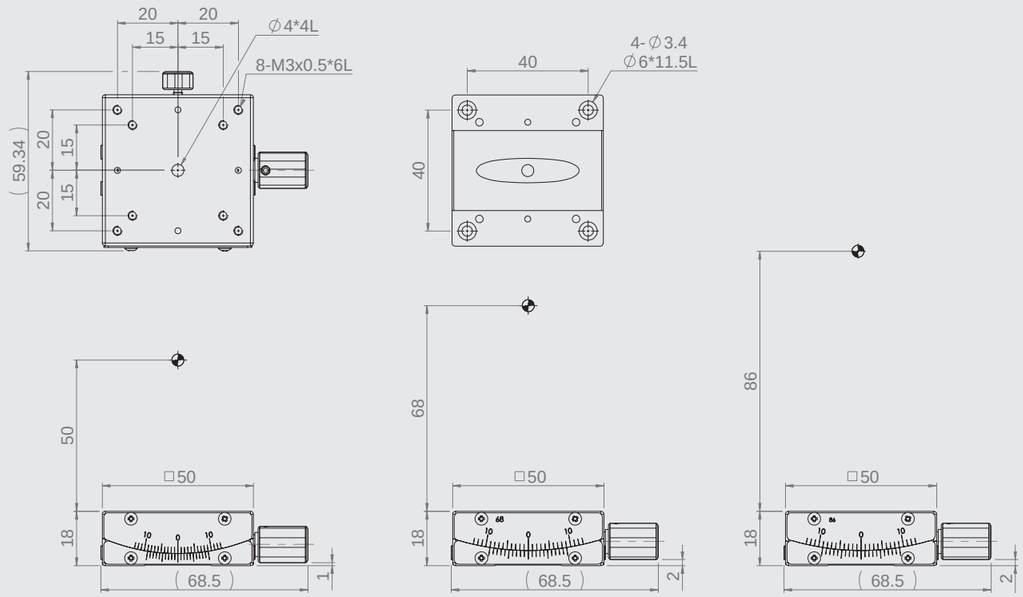

MXG5-50CS MXG5-68CS MXG5-86CS

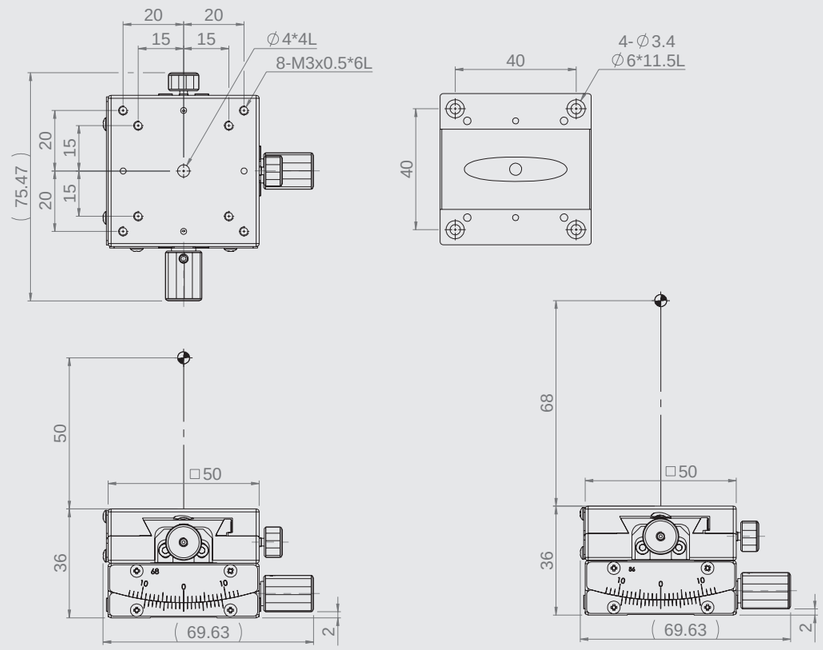

MYG5-50CS MYG5-68CS

MXG9-118CSW

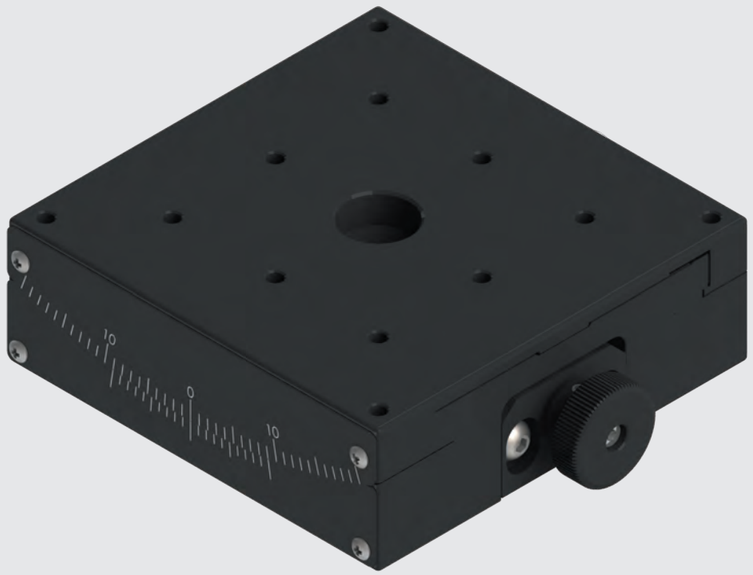

Specification

Unit: mm

Model no.	Table size	Axis	Feed position	Height of rotation center	Travel stroke	Minimum reading	Micrometer minimum reading	Allowable Loading (kgf)	Weight kg	Material	Surface finish
MXG9-118CSW	90*90	α	Central	118	±12°	1° / Vernier	≒ 92"	7.5	0.33	Aluminum alloy	Black fluororesin

MXG9-118CSW

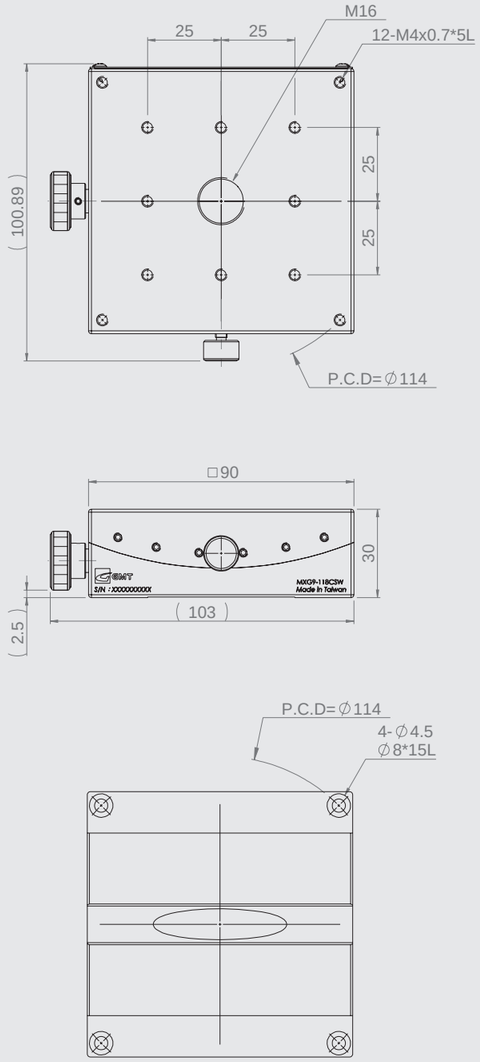

MXG3-30CE

MYG3-30CE

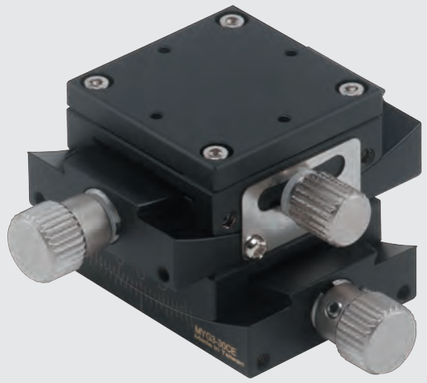

Specification

Unit: mm

Model no.	Table size	Axis	Height of rotation center	Travel stroke	Minimum reading	Stroke per revolution	Allowable Loading (kgf)	Weight kg	Material	Surface finish
MXG3-30CE	30*30	α	30	± 8°	1°/ Vernier	≒44'39"	1.5	0.1	Brass Alloy	Black fluororesin
MXG3-44CE			44	± 6°		≒33'23"				
MXG3-57CE			57	± 5°		≒26'39"				
MYG3-30CE		αβ	30	Up axis ± 8° Lower axis ± 6°		Up axis ≒44'39" Lower axis ≒33'23"		0.2		
MYG3-44CE			44	Up axis ± 6° Lower axis ± 5°		Up axis ≒33'23" Lower axis ≒26'39"				

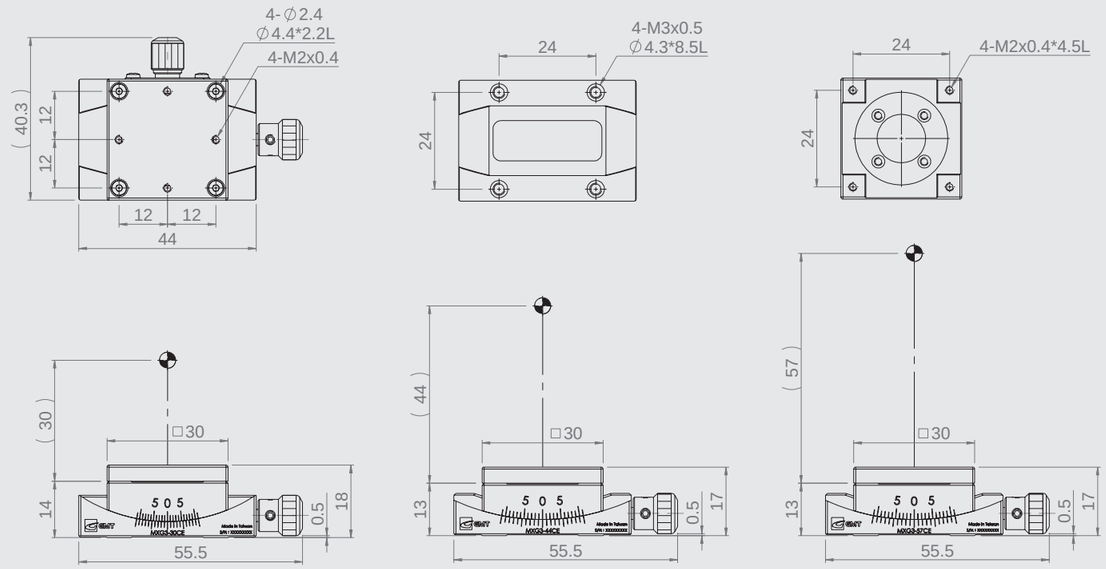

MXG3-30CE　MXG3-44CE　MXG3-57CE

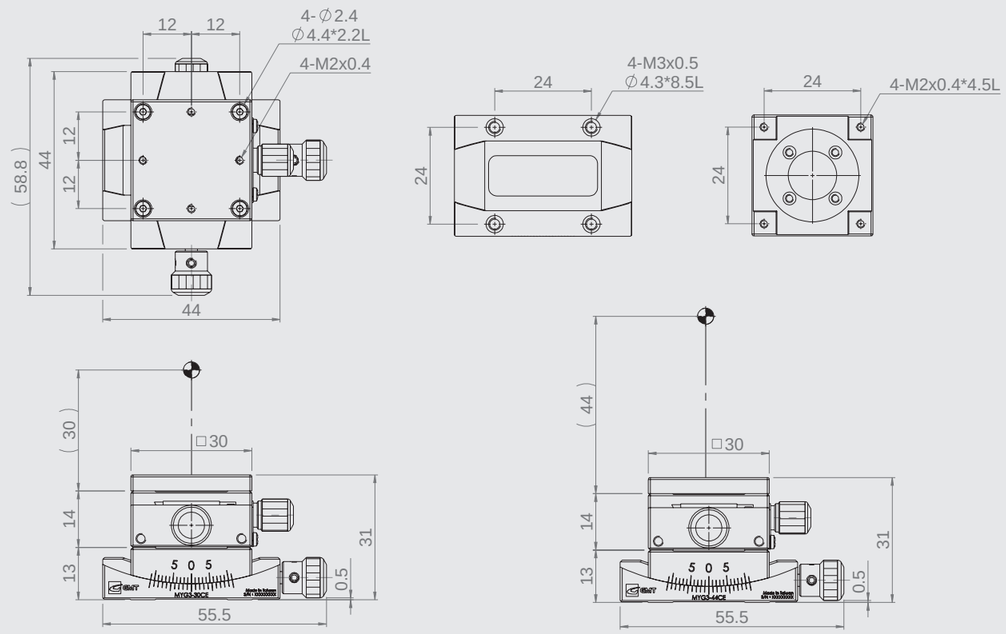

MYG3-30CE　MYG3-44CE

MXG4-50CE

MYG4-50CE

Specification

Unit: mm

Model no.	Table size	Axis	Height of rotation center	Travel stroke	Minimum reading	Stroke per revolution	Allowable Loading (kgf)	Weight kg	Material	Surface finish
MXG4-50CE	40*40	α	50	± 8°	1°/ Vernier	≒28'11"	3	0.3	Brass Alloy	Black fluororesin
MXG4-68CE			68	± 6°		≒21'45"				
MXG4-86CE			86	± 5°		≒17'43"				
MYG4-50CE		αβ	50	Up axis ± 8° Lower axis ± 6°		Up axis ≒28'11" Lower axis ≒21'45"		0.6		
MYG4-68CE			68	Up axis ± 6° Lower axis ± 5°		Up axis ≒21'45" Lower axis ≒17'43"				

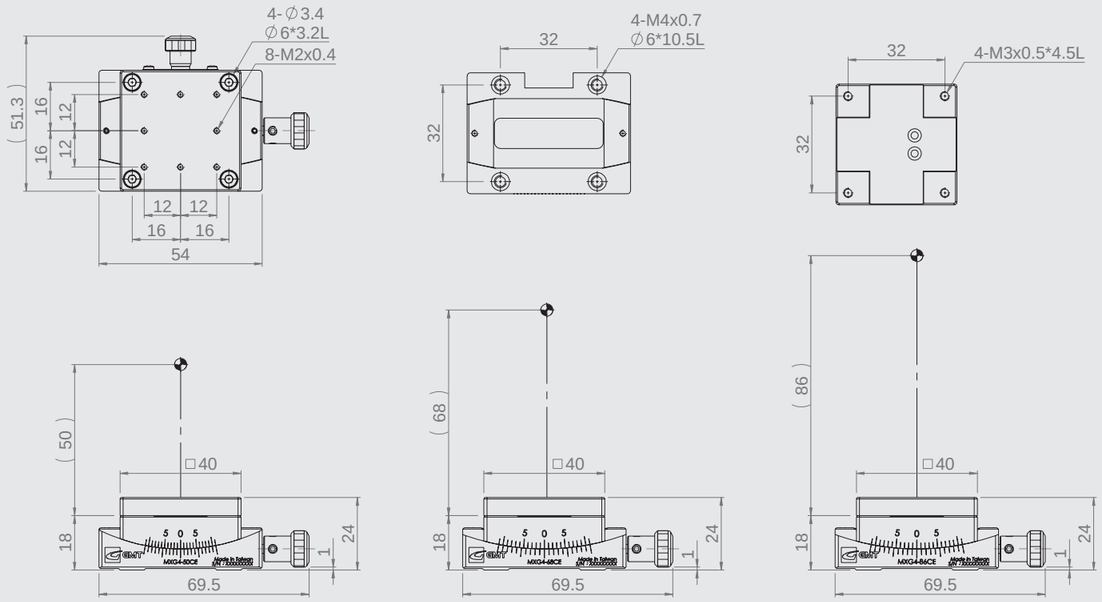

MXG4-50CE MXG4-68CE MXG4-86CE

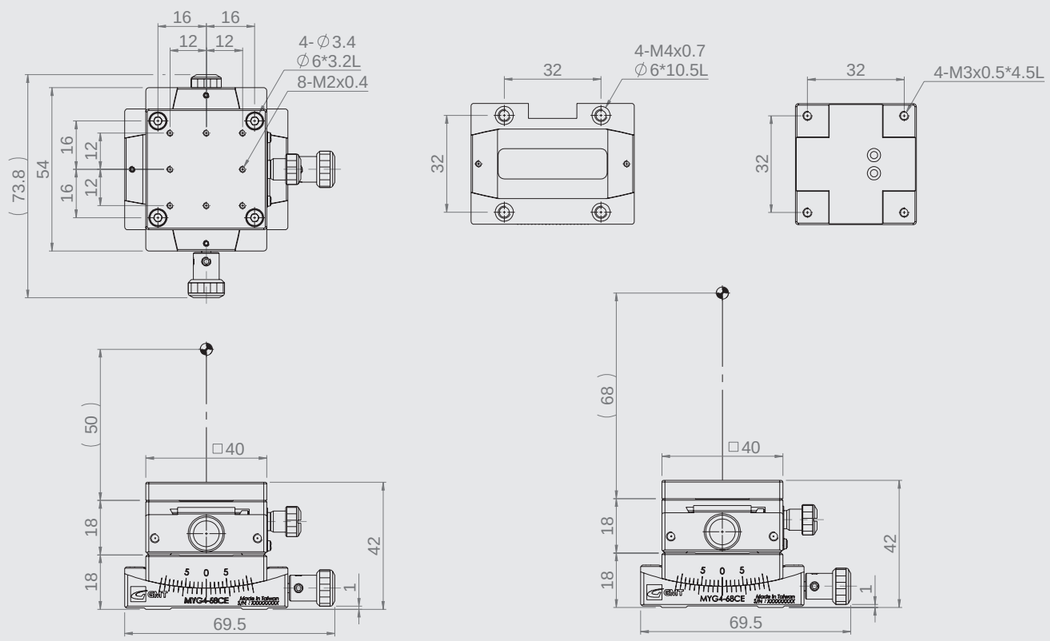

MYG4-50CE MYG4-68CE

MXG6-70CE

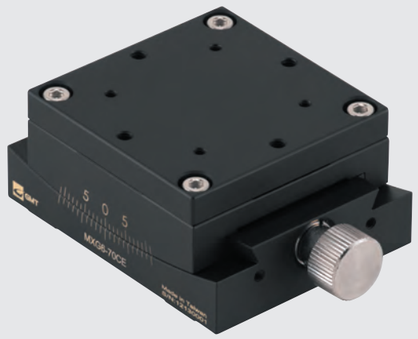

MYG6-70CE

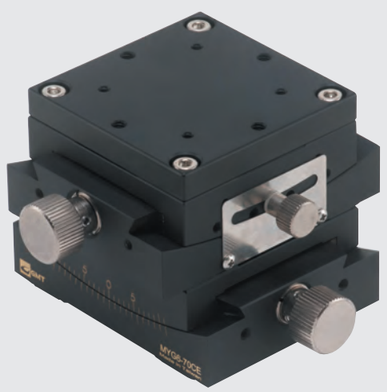

Specification

Unit: mm

Model no.	Table size	Axis	Height of rotation center	Travel stroke	Minimum reading	Stroke per revolution	Allowable Loading (kgf)	Weight kg	Material	Surface finish
MXG6-70CE	60*60	α	70	± 8°	1°/ Vernier	= 19'59"	5	0.7	Brass Alloy	Black fluororesin
MXG6-96CE			96	± 6°		= 15'21"				
MXG6-122CE			122	± 5°		= 12'27"				
MYG6-70CE		αβ	70	Up axis ± 8° Lower axis ± 6°		Up axis = 19'59" Lower axis = 15'21"		1.4		
MYG6-96CE			96	Up axis ± 6° Lower axis ± 5°		Up axis = 15'21" Lower axis = 12'27"				

Dovetail goniometer stage ▶ α-axis and αβ-axis
GMT GLOBAL INC.
Dovetail goniometer stage | α-axis and αβ-axis
Dovetail goniometer stage
α-axis and αβ-axis

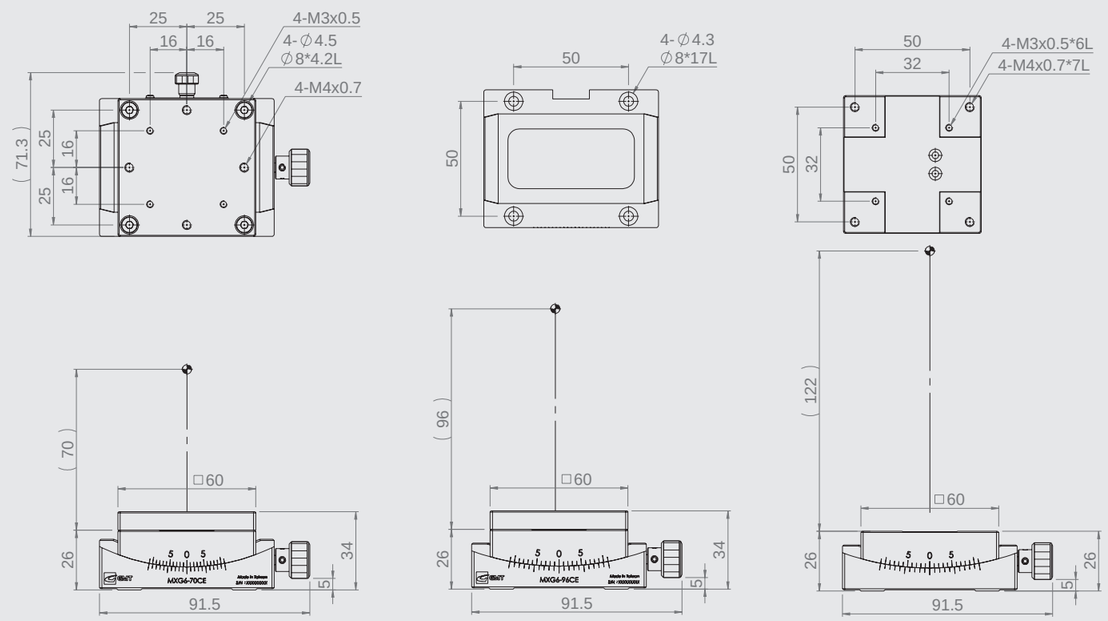

MXG6-70CE MXG6-96CE MXG6-122CE

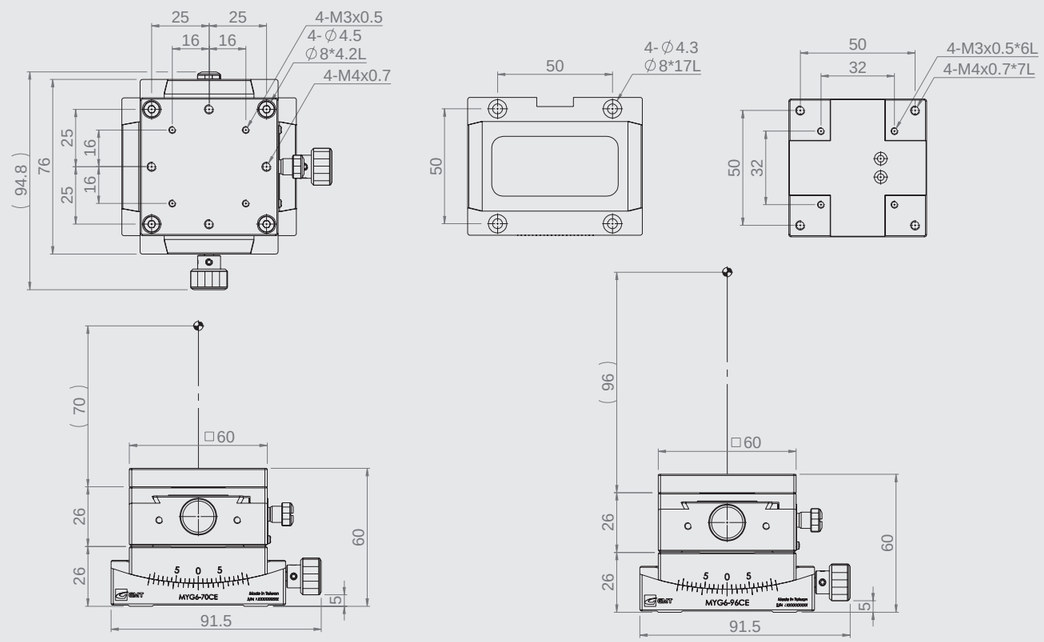

MYG6-70CE MYG6-96CE

MXG4-□□VM

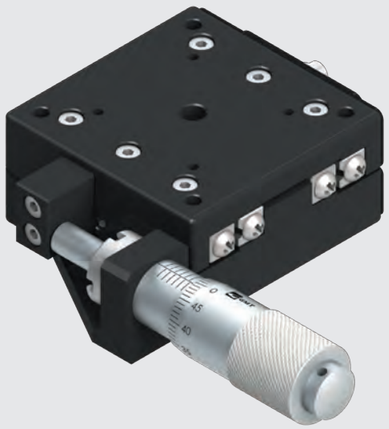

MXG5-50VM

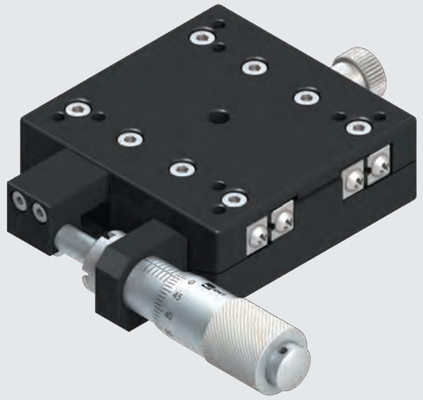

Specification

Unit: mm

Model no.	Table size	Axis	Feed position	Height of rotation center	移動量	Minimum reading	Micrometer minimum reading	Allowable Loading (kgf)	Weight kg	Material	Surface finish
MXG4-40VM	40*40	α	Side	40	±7°	0.1°	≒ 40"	3	0.15	Aluminum alloy	Black anodized
MXG4-60VM	40*40			60	±4°		≒ 29"		0.15		
MXG4-80VM	40*40			80	±4°		≒ 22"		0.15		
MXG5-50VM	50*50			50	±3°		≒ 53"		0.2		

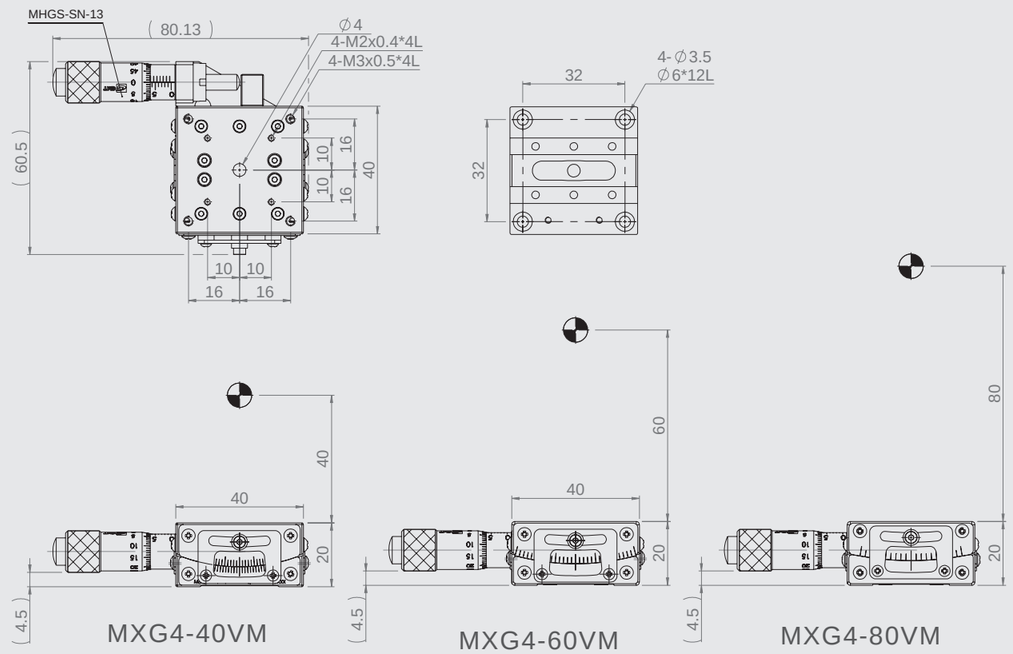

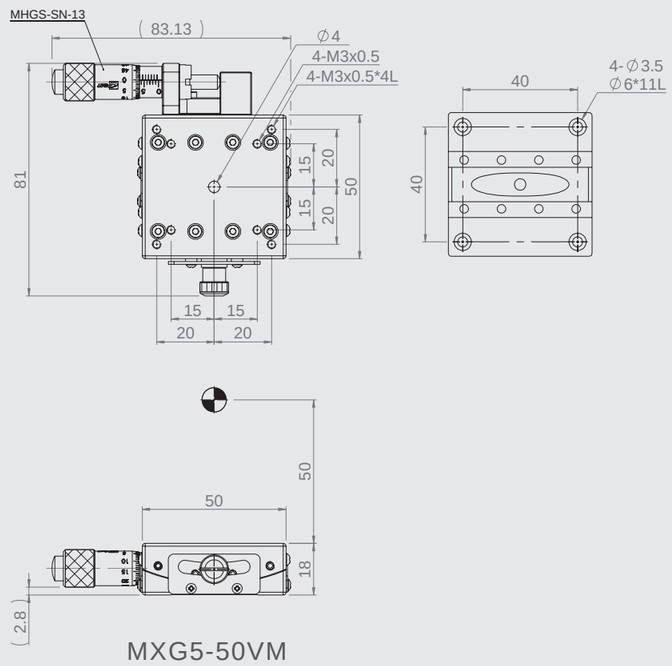

MXG6-□□VM

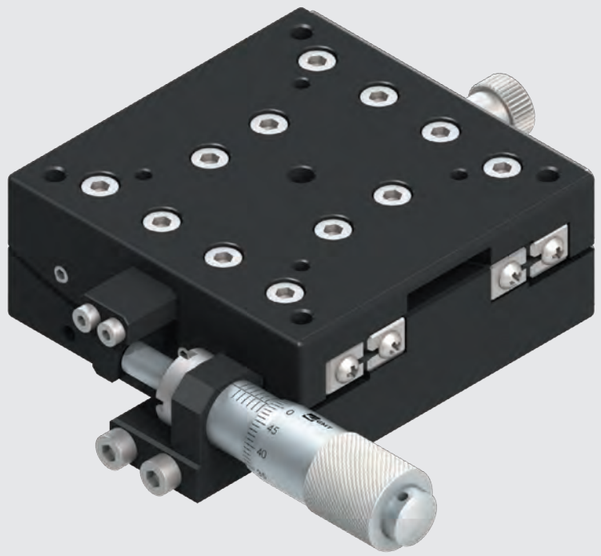

Specification

Unit: mm

Model no.	Table size	Axis	Feed position	Height of rotation center	移動量	Minimum reading	Micrometer minimum reading	Allowable Loading (kgf)	Weight kg	Material	Surface finish
MXG6-50VM	60*60	α	Side	50	±4°	0.1°	≒ 32"	4.5	0.33	Aluminum alloy	Black anodized
MXG6-75VM	60*60			75	±3°		≒ 23"				
MXG6-100VM	60*60			100	±3°		≒ 18"				

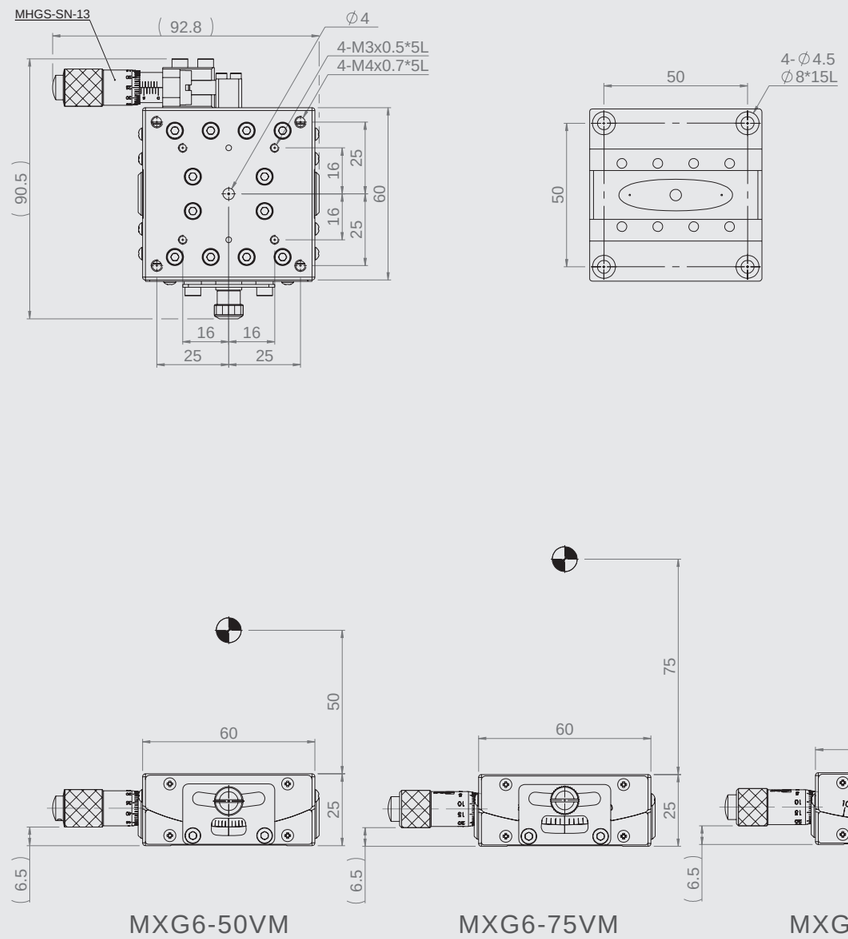

MCV100-AS

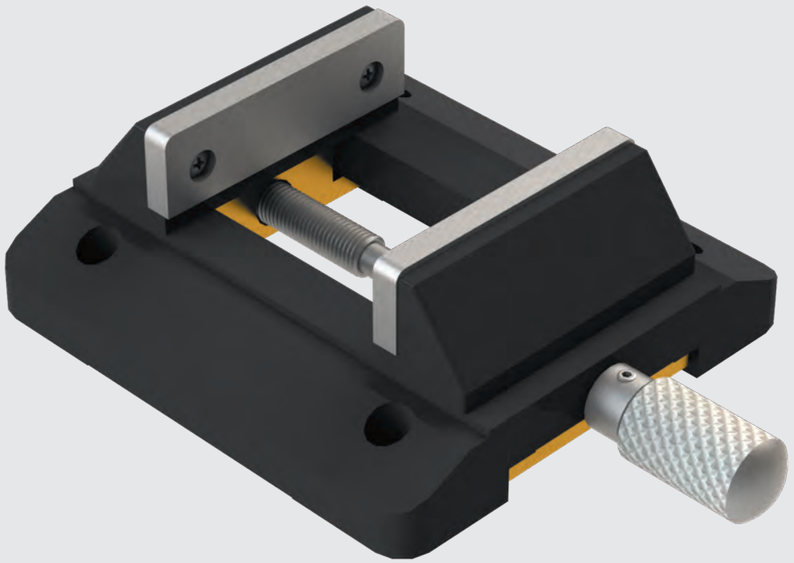

Specification

Unit: mm

Model no.	Table size	Feed position	夾持尺寸	Allowable Loading (kgf)	Weight kg	Material	Surface finish
MCV100-AS	100*94	Side	0~49	20	0.55	Aluminum alloy	Black anodized

Feeding screw drive ▶ X axis
Vice clamping fixture
GMT GLOBAL INC.
Vice clamping fixture

MCV100-AS

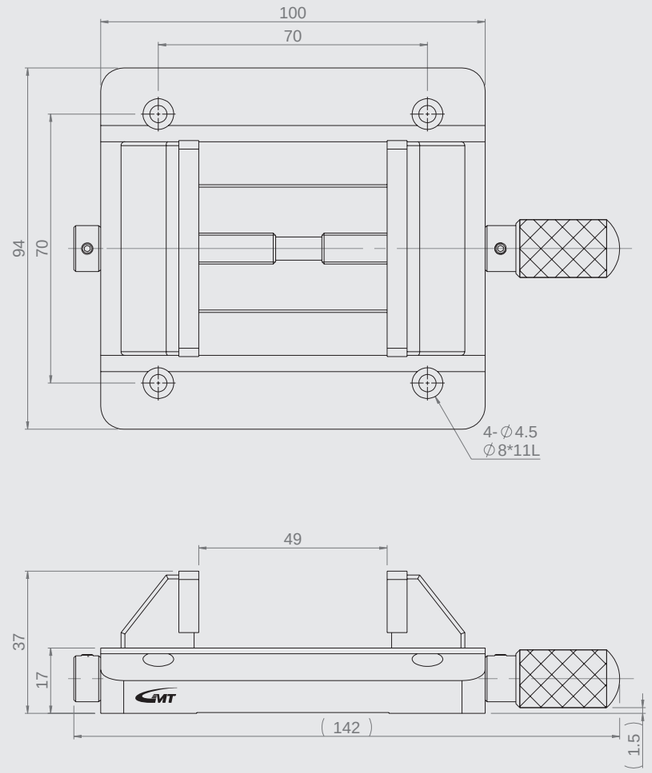

M3E-2000S-L

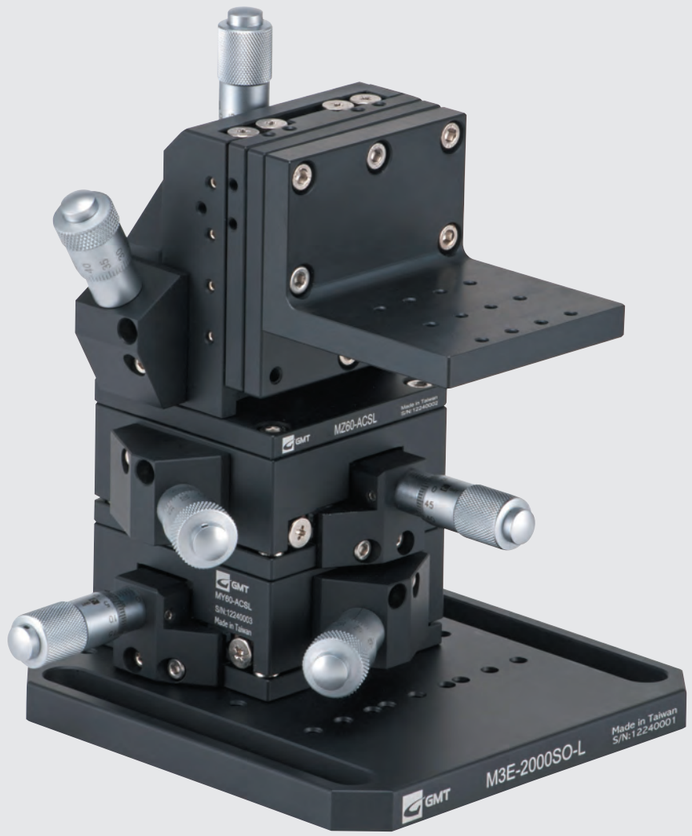

Specification

Unit: mm

Specification / Axis	Travel Stroke		Resolution	
	Coarse Tuning	Fine Tuning	Coarse Tuning	Fine Tuning
X	±6.5 mm	±0.3 mm	10 μm	0.5 μm
Y	±6.5 mm	±0.3 mm	10 μm	0.5 μm
Z	±6.5 mm	±0.3 mm	10 μm	0.5 μm

M3E-2000S-L model is consisted XYZ manual positioning stages accembled with one L bracket to perform tilt movement.

Remark: Available option of XYZ module with ordering code: MXYZ60-ACSL

M3E-2000S-L

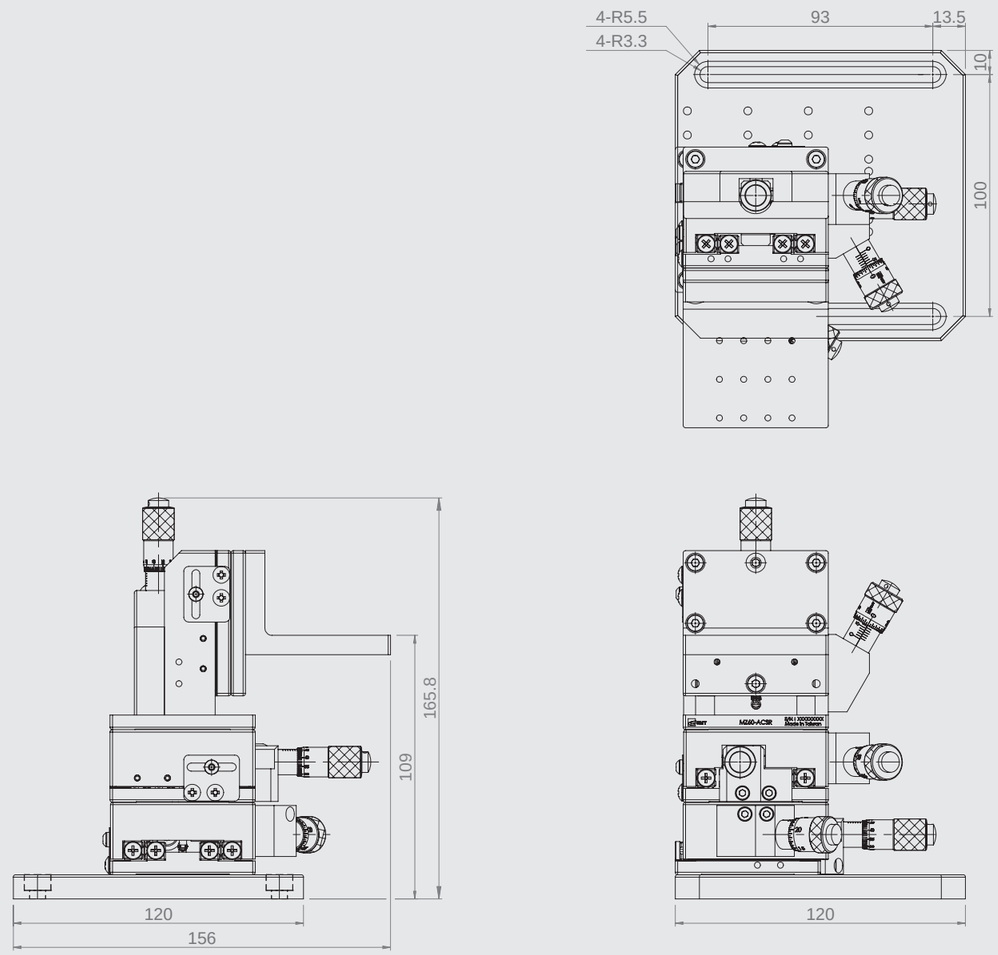

M3E-2000S-R

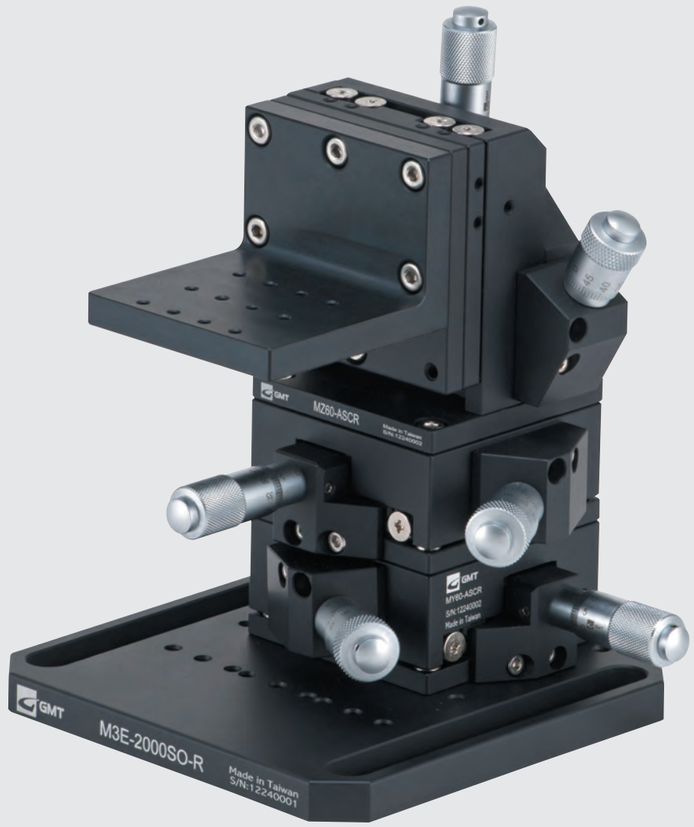

Specification

Unit: mm

Specification / Axis	Travel Stroke		Resolution	
	Coarse Tuning	Fine Tuning	Coarse Tuning	Fine Tuning
X	±6.5 mm	±0.3 mm	10 μm	0.5 μm
Y	±6.5 mm	±0.3 mm	10 μm	0.5 μm
Z	±6.5 mm	±0.3 mm	10 μm	0.5 μm

M3E-2000S-R model is consisted XYZ manual positioning stages accembled with one L bracket to perform tilt movement.

Remark: Available option of XYZ module with ordering code: MXYZ60-ACSR

M3E-2000S-R

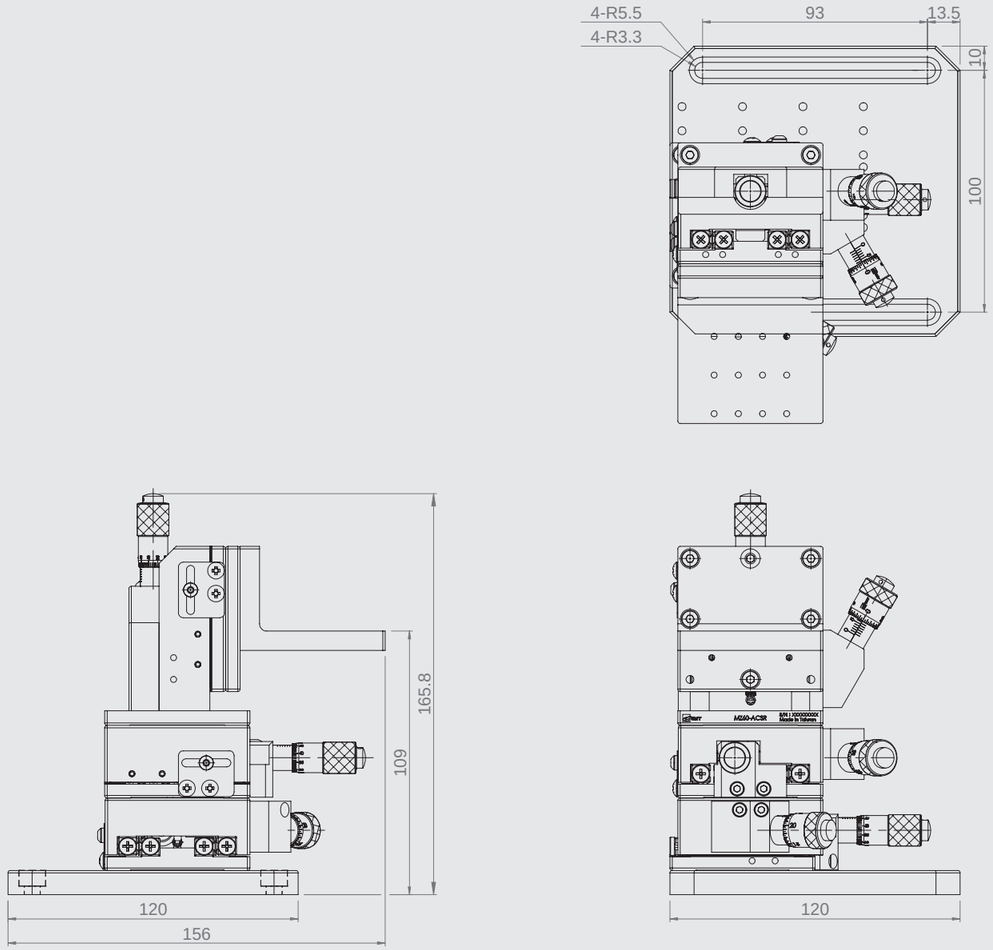

M5E-2000B-L

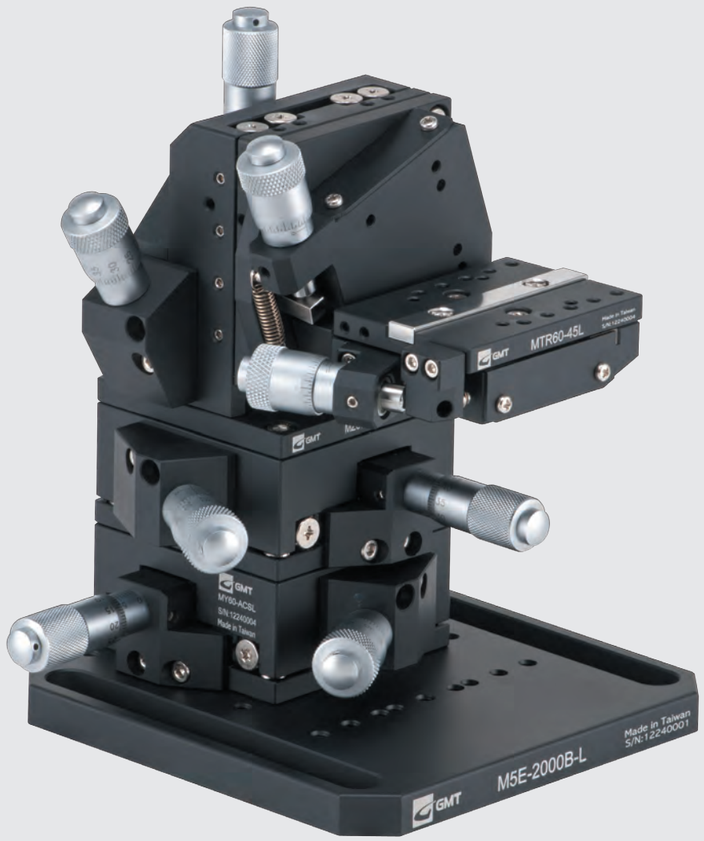

Specification

Unit: mm

Specification / Axis	Travel Stroke		Resolution	
	Coarse Tuning	Fine Tuning	Coarse Tuning	Fine Tuning
X	±6.5 mm	±0.3 mm	10 μm	0.5 μm
Y	±6.5 mm	±0.3 mm	10 μm	0.5 μm
Z	±6.5 mm	±0.3 mm	10 μm	0.5 μm
θx	±3°		≒ 29.3 ″/div.	
θy	±3°		≒ 27.8 ″/div.	

M5E-2000B-L model is consisted XYZ manual positioning stages accembled with tilt stage (θx, θy) to perform a unit with 5-axis high resolution positioning stage.
The complete assembly is mostly applied to single-fiber alignment equipment.

Remark: Available option of XYZ module with ordering code: MXYZ60-ACSL;
Tilt module with ordering code: MTR60-45R

M5E-2000B-L

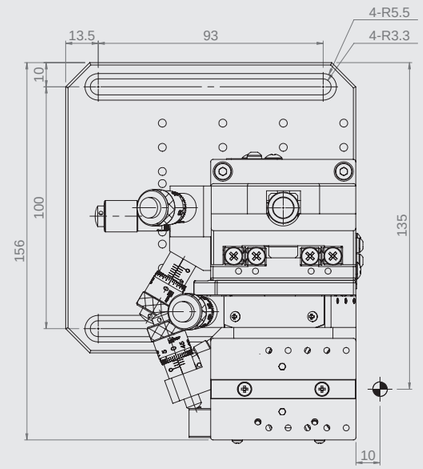

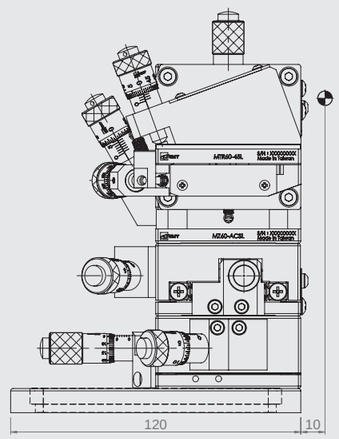

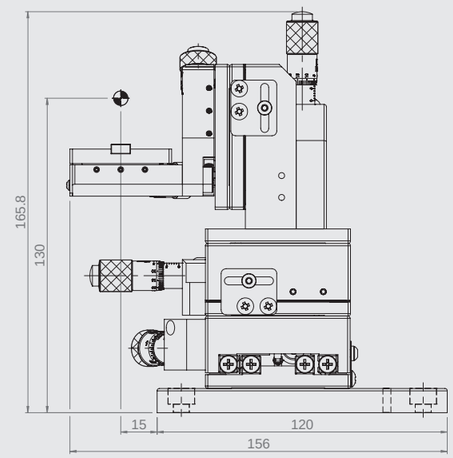

M5E-2000B-R

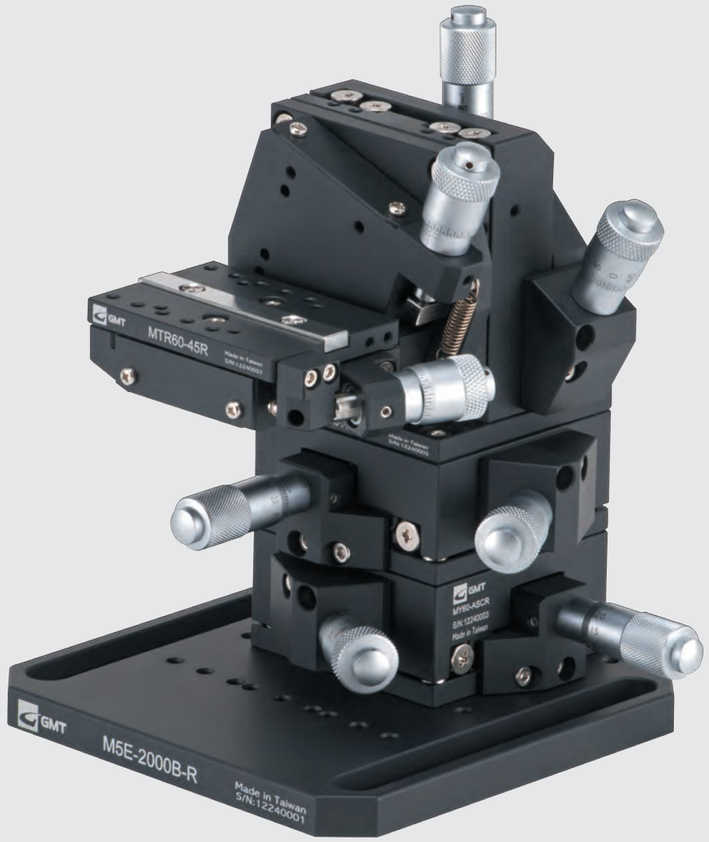

Specification

Unit: mm

Specification / Axis	Travel Stroke		Resolution	
	Coarse Tuning	Fine Tuning	Coarse Tuning	Fine Tuning
X	±6.5 mm	±0.3 mm	10 μm	0.5 μm
Y	±6.5 mm	±0.3 mm	10 μm	0.5 μm
Z	±6.5 mm	±0.3 mm	10 μm	0.5 μm
θx	±3°		≒ 29.3 ″/div.	
θy	±3°		≒ 27.8 ″/div.	

五軸式：M5E-2000B-R是由XYZ三軸精密定位滑台模組搭配一傾斜滑台模組形成五軸式的複合功能精密滑台組，適用於單芯對位。
迴轉軸中心高度為130mm，此高度可以增加組裝板方向墊高。
相關的規格細節，請與區域經銷／業務團隊洽詢。
規格化模組選購型號：M5E-2000B-R
單獨拆解模組選購型號：XYZ模組－MXYZ60-ACSR　　傾斜滑台模組－MTR60-45R

M5E-2000B-R

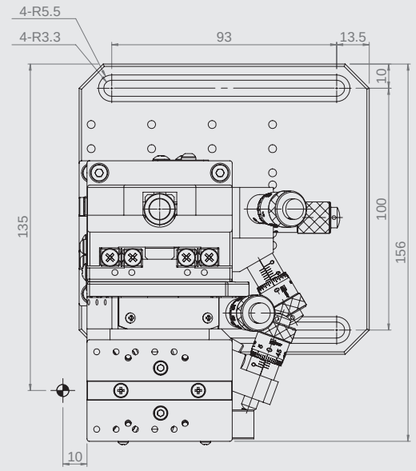

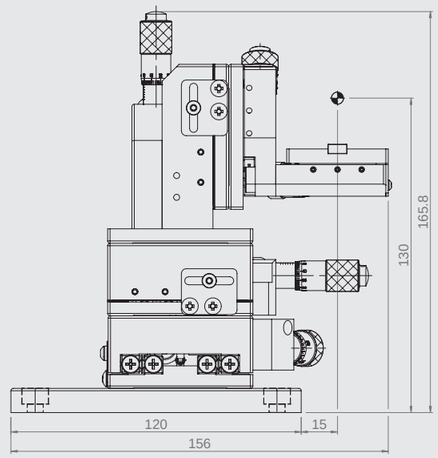

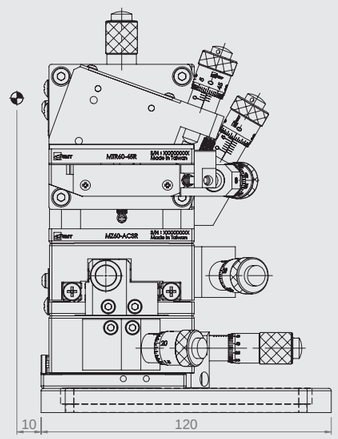

M6E-2200B-L

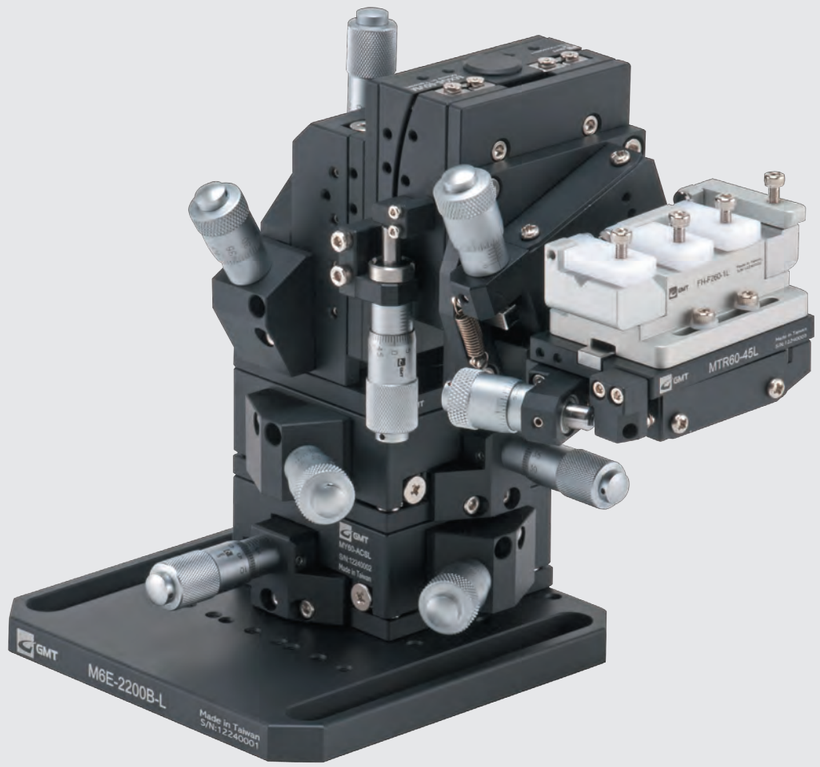

Specification

Unit: mm

Specification / Axis	Travel Stroke		Resolution	
	Coarse Tuning	Fine Tuning	Coarse Tuning	Fine Tuning
X	±6.5 mm	±0.3 mm	10 μm	0.5 μm
Y	±6.5 mm	±0.3 mm	10 μm	0.5 μm
Z	±6.5 mm	±0.3 mm	10 μm	0.5 μm
θx	±3°		≒ 29.3 ″/div.	
θy	±3°		≒ 27.8 ″/div.	
θz	±4°		≒ 33 ″/div.	

六軸式：M6E-2200B-L 是由XYZ三軸精密定位滑台模組搭配一傾斜滑台模組及精密側角滑台形成六軸式的複合功能精密滑台組，適用於單芯對位或光導波產業應用。迴轉軸中心高度為130mm，此高度可以增加組裝板方向墊高。

相關的規格細節，請與區域經銷／業務團隊洽詢。

規格化模組選購型號：M6E-2200B-L

單獨拆解模組選購型號：XYZ模組－MXYZ60-ACSL　　傾斜滑台模組－MTR60-45R　　側角滑台模組－MXG6-50VMR

M6E-2200B-L

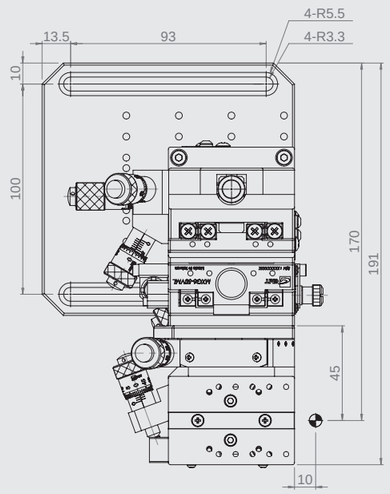

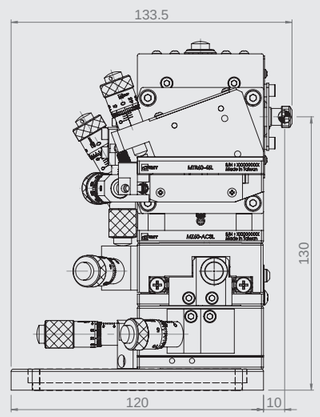

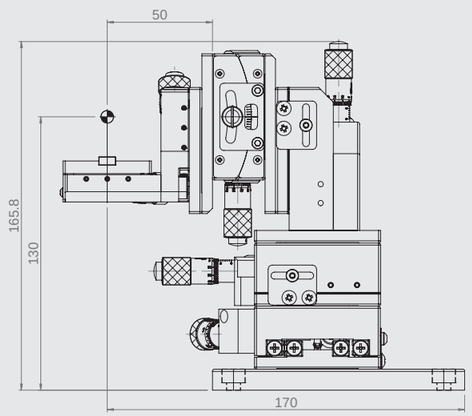

M6E-2200B-R

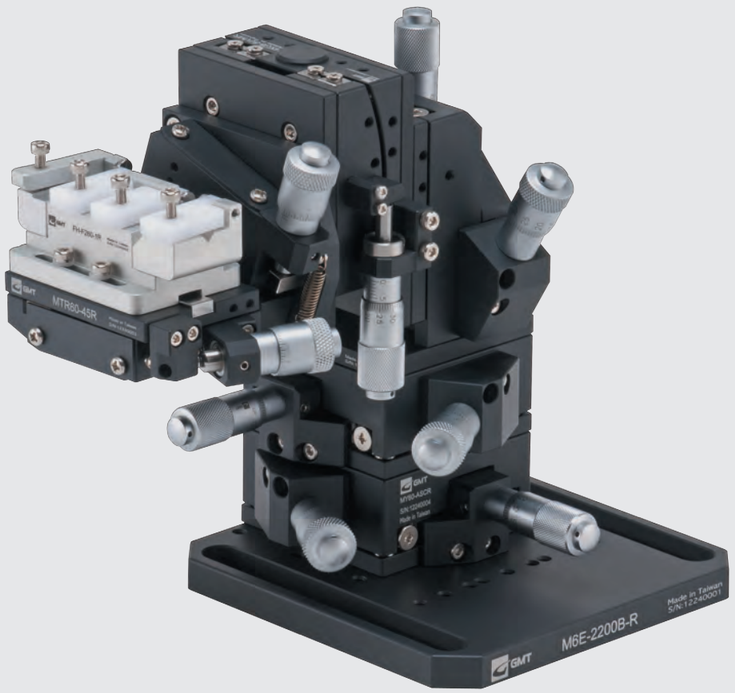

Specification

Unit: mm

Specification / Axis	Travel Stroke		Resolution	
	Coarse Tuning	Fine Tuning	Coarse Tuning	Fine Tuning
X	±6.5 mm	±0.3 mm	10 μm	0.5 μm
Y	±6.5 mm	±0.3 mm	10 μm	0.5 μm
Z	±6.5 mm	±0.3 mm	10 μm	0.5 μm
θx	±3°		≒ 29.3 ″/div.	
θy	±3°		≒ 27.8 ″/div.	
θz	±4°		≒ 33 ″/div.	

六軸式：M6E-2200B-R 是由XYZ三軸精密定位滑台模組搭配一傾斜滑台模組及精密側角滑台形成六軸式的複合功能精密滑台組，適用於單芯對位或光導波產業應用。迴轉軸中心高度為130mm，此高度可以增加組裝板方向墊高。
相關的規格細節，請與區域經銷／業務團隊洽詢。
規格化模組選購型號：M6E-2200B-R
單獨拆解模組選購型號：XYZ模組－MXYZ60-ACSL　　傾斜滑台模組－MTR60-45R　　側角滑台模組－MXG6-50VMR

Manual fiber positioning ▶ XYZ θx, θy, θz axis
GMT GLOBAL INC.
XYZ θx, θy, θz axis
XYZ θx, θy, θz axis

M6E-2200B-R

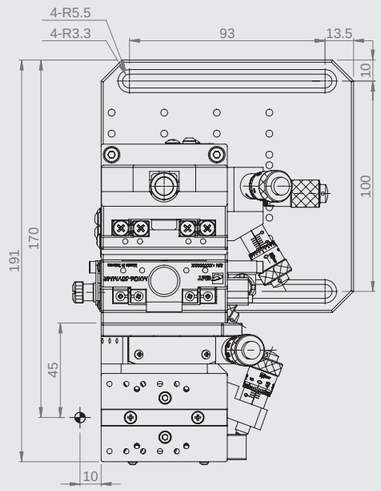

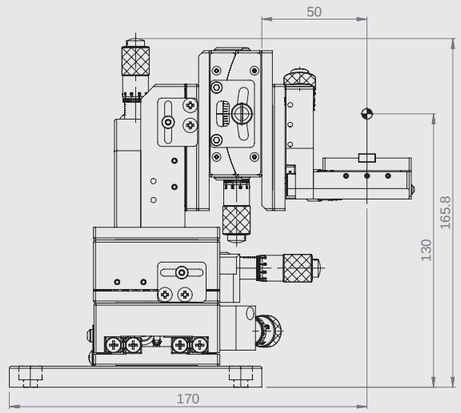

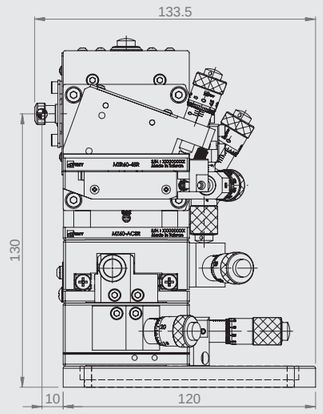

M5F-460A561-L

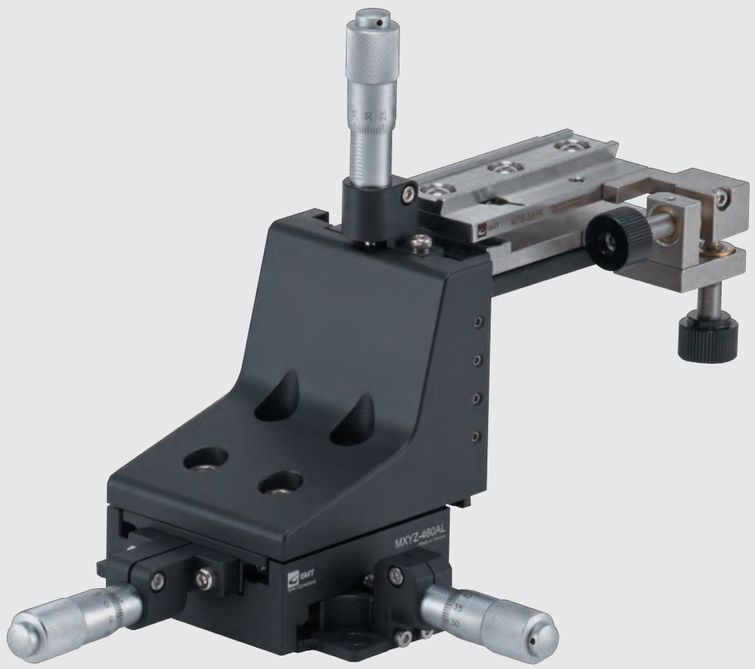

Specification

Unit: mm

Specification / Axis	Travel Stroke	Allowable(N)	Material
X	0.5 inch(12.7 mm)	67	Aluminum alloy
Y	0.5 inch(12.7 mm)		
Z	0.5 inch(12.7 mm)		
θx	±5°		Stainless Steel
θy	±5°		

Thread hole	Size 【inch.(mm)】	
A	B	C
1/4-20	0.5(12.5)	1(25.4)

GMT產品組成方式：(MTS-561L+MXYZ-460AR+M5F-460A561-BKT)
五軸式：M5F-460A561-L是由XYZ三軸精密定位滑台模組搭配傾斜滑台模組形成五軸式的複合功能精密滑台組。
相關的規格細節，請與區域經銷／業務團隊洽詢。
規格化模組選購型號：M5F-M460A561-L
Remark：Available option of XYZ model with ordering code MXYZ460-AL
Tilt module with ordering code : MTS-561-L

M5F-460A561-L

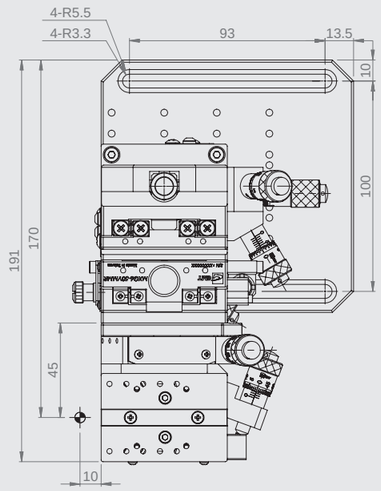

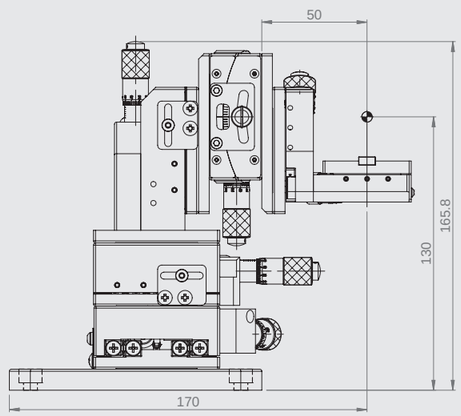

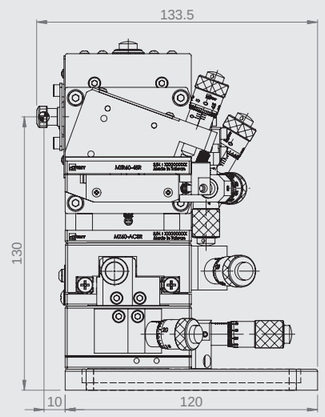

M5F-460A561-R

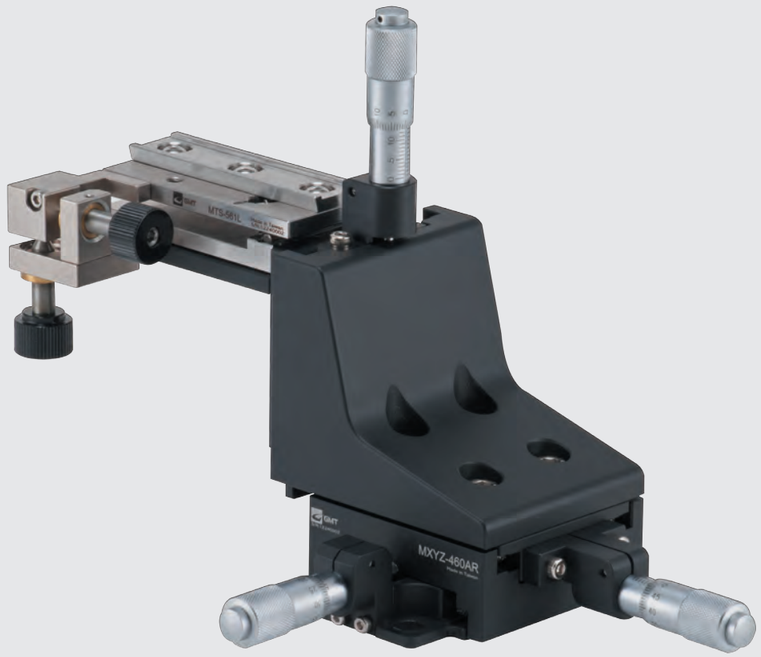

Specification

Unit: mm

Specification / Axis	Travel Stroke	Allowable(N)	Material
X	0.5 inch(12.7 mm)	67	Aluminum alloy
Y	0.5 inch(12.7 mm)		
Z	0.5 inch(12.7 mm)		
θx	±5°		Stainless Steel
θy	±5°		

Thread hole	Size 【inch.(mm)】	
A	B	C
1/4-20	0.5(12.5)	1(25.4)

GMT產品組成方式：(MTS-561L+MXYZ-460AR+M5F-460A561-BKT)
五軸式：M5F-460A561-R是由XYZ三軸精密定位滑台模組搭配傾斜滑台模組形成五軸式的複合功能精密滑台組。
相關的規格細節，請與區域經銷／業務團隊洽詢。
規格化模組選購型號：M5F-M460A561-R
單獨拆解模組選購型號：XYZ模組－MXYZ460-AL 傾斜滑台模組－MTS-561-L

M5F-460A561-R

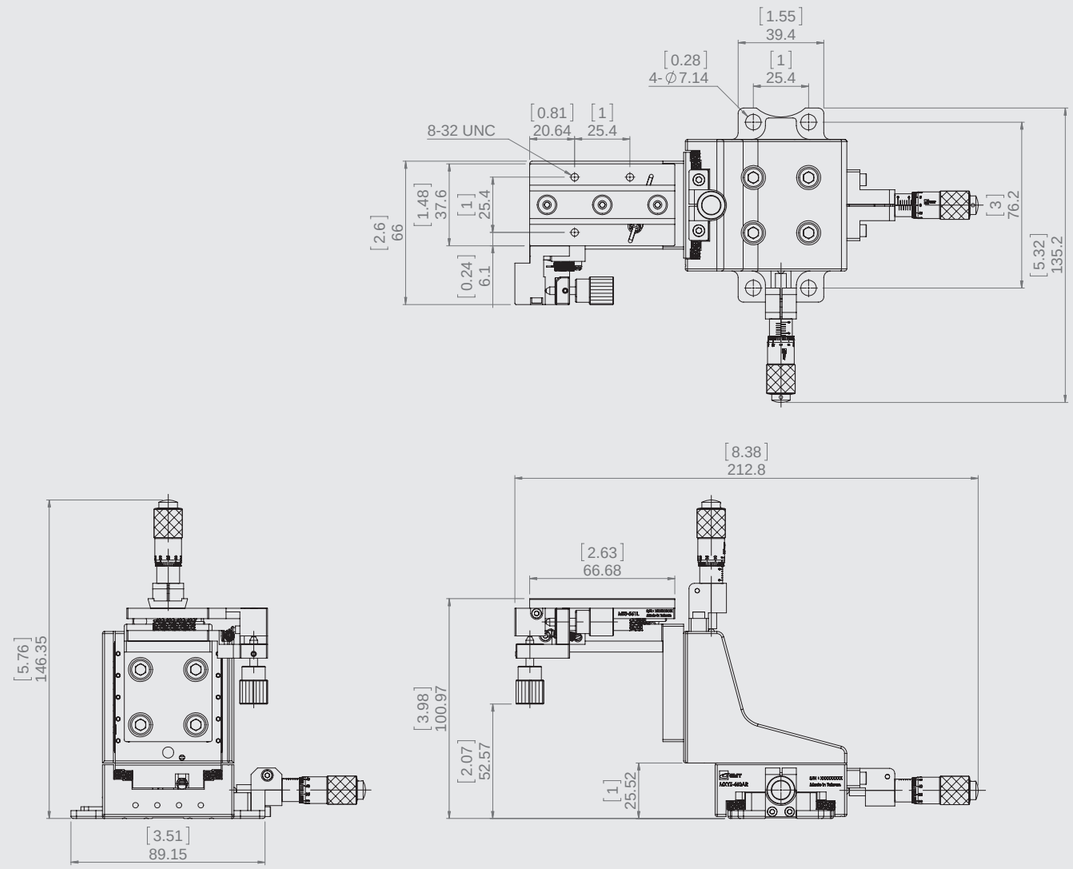

MTS-561-L

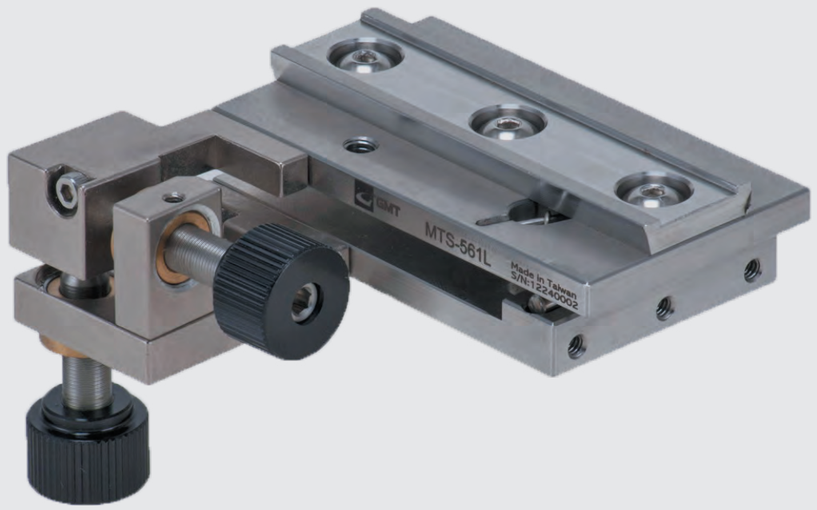

Specification

Unit: mm

Specification / Axis	Travel Stroke	Sensitivity	Allowable(N)	Material
θx	±5°	Each circular motion 5arc-seconds	22	Stainless Steel
θy	±5°			

Tilt stage model MTS-561-L body is stainless steel, which obtains an excellent stability under long-time working process.
The 5arc-second sensitivity could make the positioning adjustment much simpler and easier.

Manual fiber positioning ▶ XYZ θx, θy tilt stage
GMT GLOBAL INC.
XYZ θx, θy tilt stage
XYZ θx, θy tilt stage

MTS-561-L

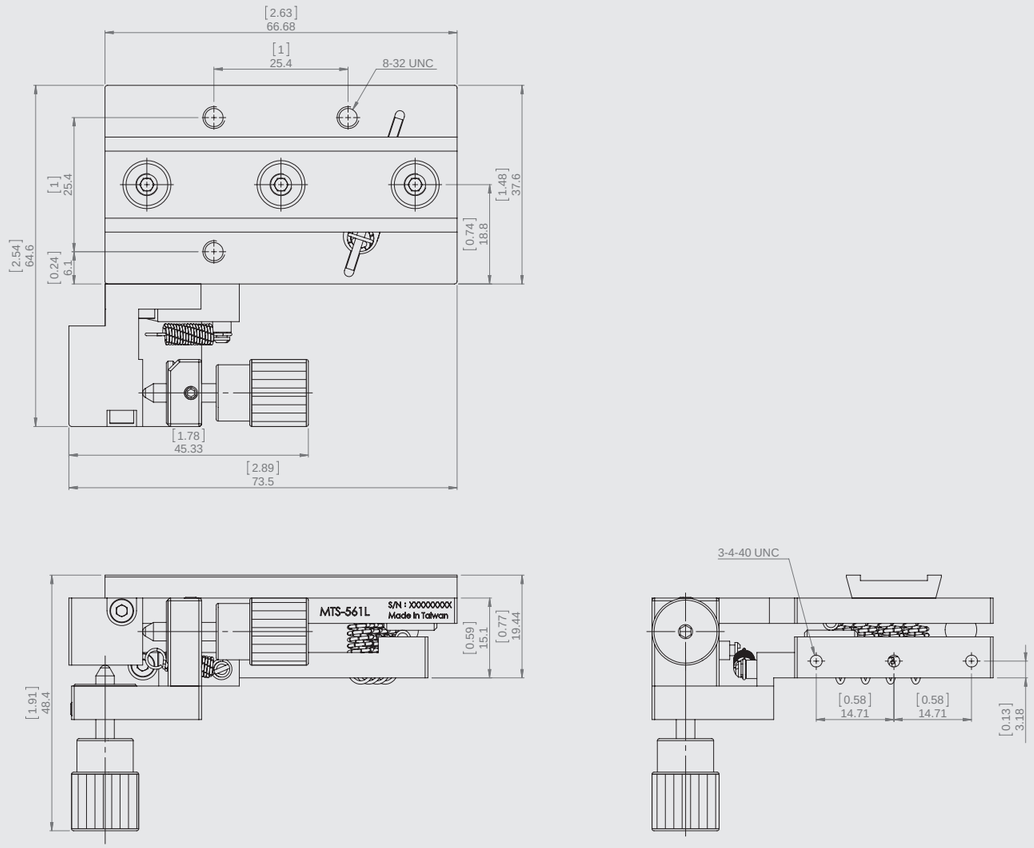

MTS-561-R

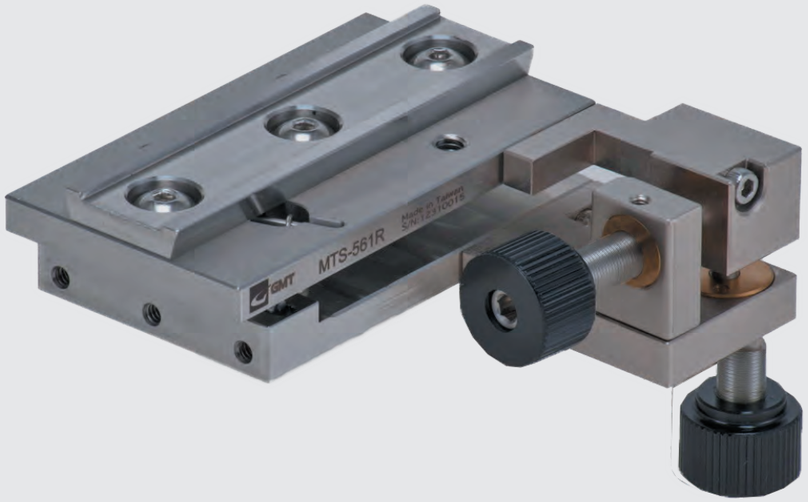

Specification

Unit: mm

Specification / Axis	Travel Stroke	Sensitivity	Allowable(N)	Material
θx	±5°	Each circular motion 5arc-seconds	22	Stainless Steel
θy	±5°			

Tilt stage model MTS-561-R body is stainless steel, which obtains an excellent stability under long-time working process.
The 5arc-second sensitivity could make the positioning adjustment much simpler and easier.

MTS-561-R

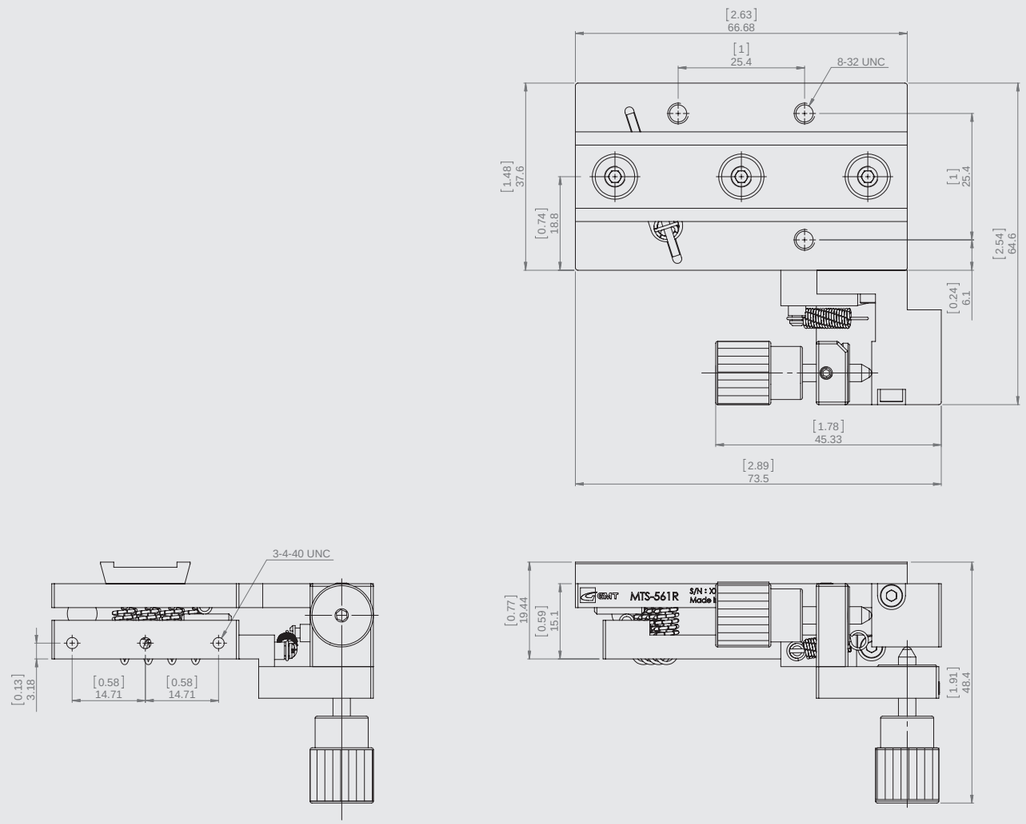

MXY-460AL

Specification

Unit: mm

Specification / Axis	Travel Stroke	Resolution	Allowable(N)	Material
X	0.5 inch(12.7 mm)	10 µm	67	Aluminum alloy
Y	0.5 inch(12.7 mm)			

Thread hole	Size【inch.(mm)】	
A	B	C
1/4-20	0.5(12.5)	1(25.4)

Aluminum Alloy made stage MXY-460AL with its spectacular feature of composing of GMT crossed roller slide rail set, which obtains the advantages of roller transmission of heavy loading capacity and reliability.

MXY-460AL

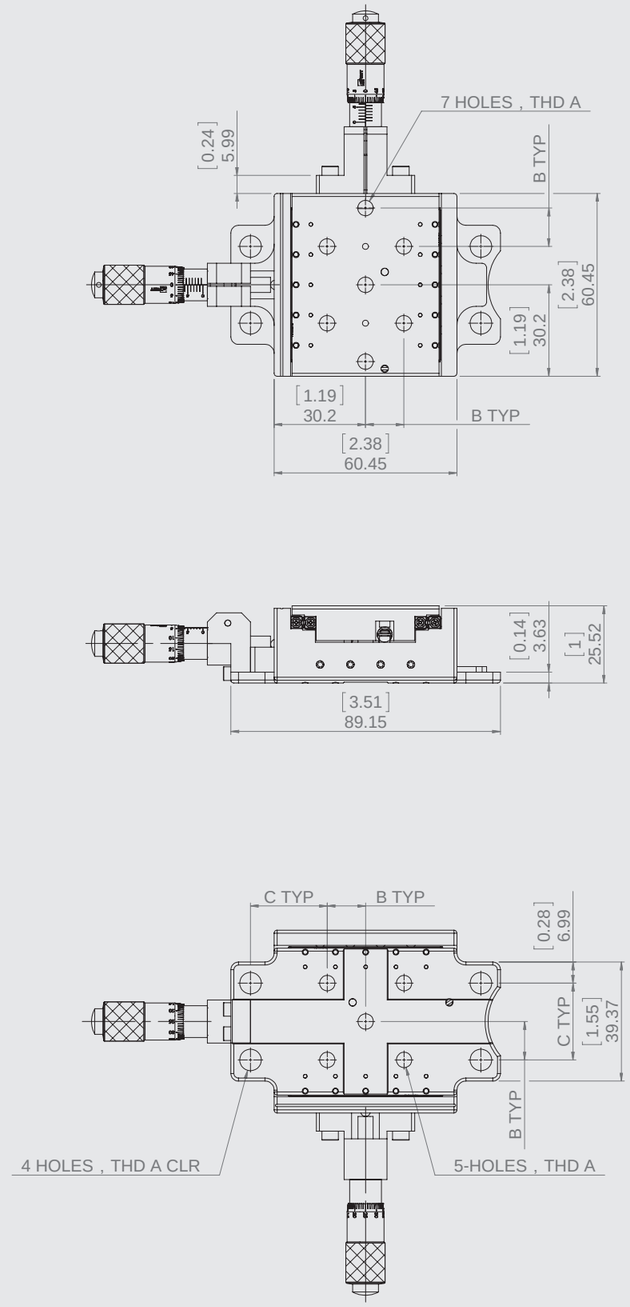

MXY-460AR

Specification

Unit: mm

Specification / Axis	Travel Stroke	Resolution	Allowable(N)	Material
X	0.5 inch(12.7 mm)	10 µm	67	Aluminum alloy
Y	0.5 inch(12.7 mm)			

Thread hole	Size【inch.(mm)】	
A	B	C
1/4-20	0.5(12.5)	1(25.4)

Aluminum Alloy made stage MXY460A-R with its spectacular feature of composing of GMT crossed roller slide rail set, which obtains the advantages of roller transmission of heavy loading capacity and reliability.

Manual fiber positioning ▶ XY-axis crossed roller guiding type
XY-axis crossed roller guiding type
GMT GLOBAL INC.
XY-axis crossed roller guiding type

MXY-460AR

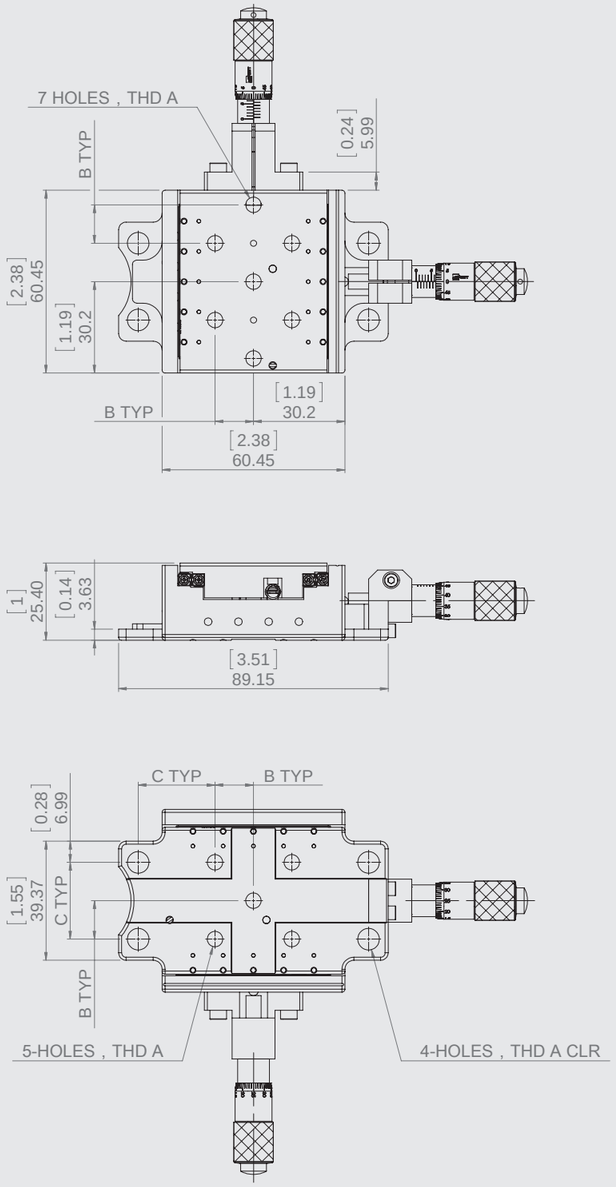

MXYZ-460AL

Specification

Unit: mm

Specification / Axis	Travel Stroke	Resolution	Allowable(N)	Material
X	0.5 inch(12.7 mm)	10 µm	67	Aluminum alloy
Y	0.5 inch(12.7 mm)			
Z	0.5 inch(12.7 mm)			

Thread hole	Size【inch.(mm)】	
A	B	C
1/4-20	0.5(12.5)	1(25.4)

The Triple-Axis precision stage MXYZ-460AL frame is Aluminum Alloy, and the spectacular feature is the composing of GMT cross roller slide rail set. In addition, this Triple-Axis stage could also be taken apart and re-assembled to a XY-axis stage or even a XZ-axis stage.

MXYZ-460AL

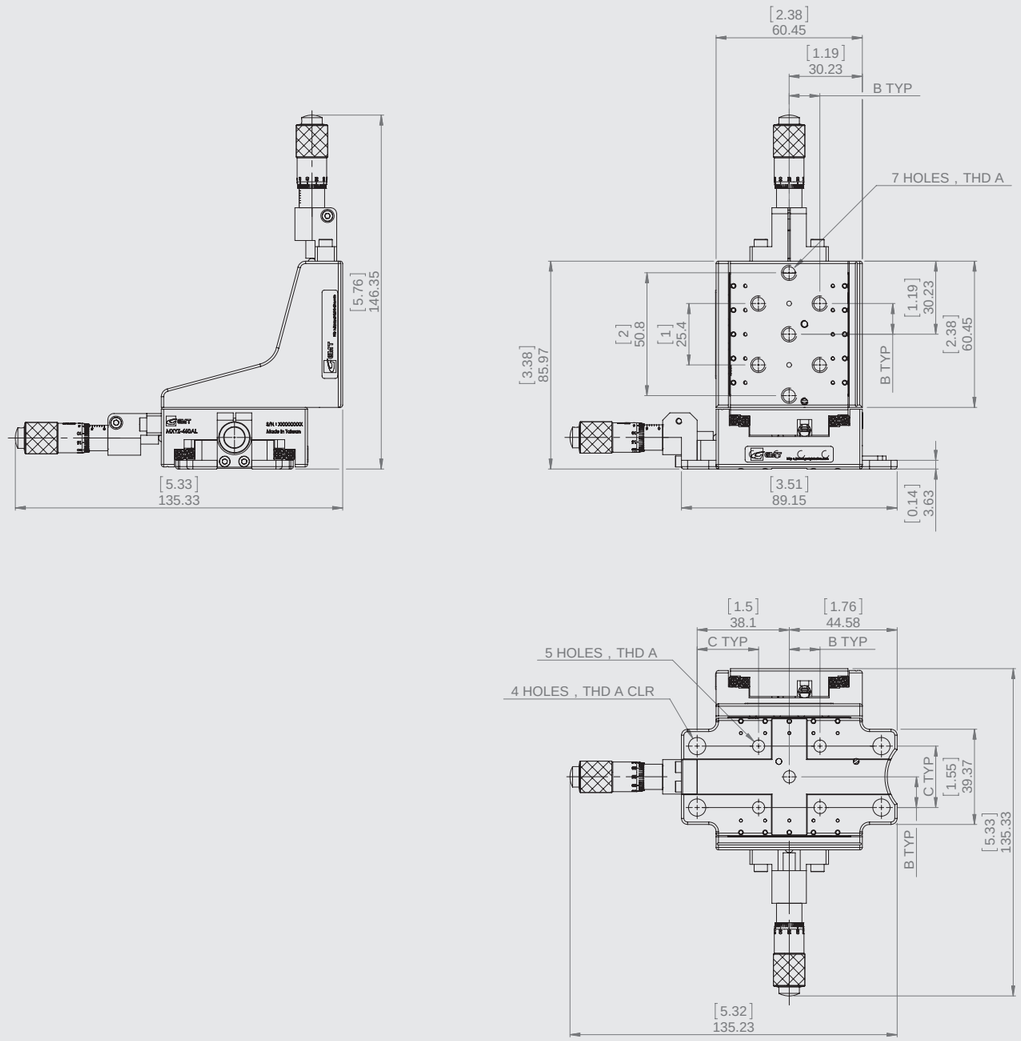

MXYZ-460AR

Specification

Unit: mm

Specification / Axis	Travel Stroke	Resolution	Allowable(N)	Material
X	0.5 inch(12.7 mm)	10 μm	67	Aluminum alloy
Y	0.5 inch(12.7 mm)			
Z	0.5 inch(12.7 mm)			

Thread hole	Size【inch.(mm)】	
A	B	C
1/4-20	0.5(12.5)	1(25.4)

The Triple-Axis precision stage MXYZ-460AR frame is Aluminum Alloy, and the spectacular feature is the composing of GMT cross roller slide rail set. In addition, this Triple-Axis stage could also be taken apart and re-assembled to a XY-axis stage or even a XZ-axis stage.

MXYZ-460AR

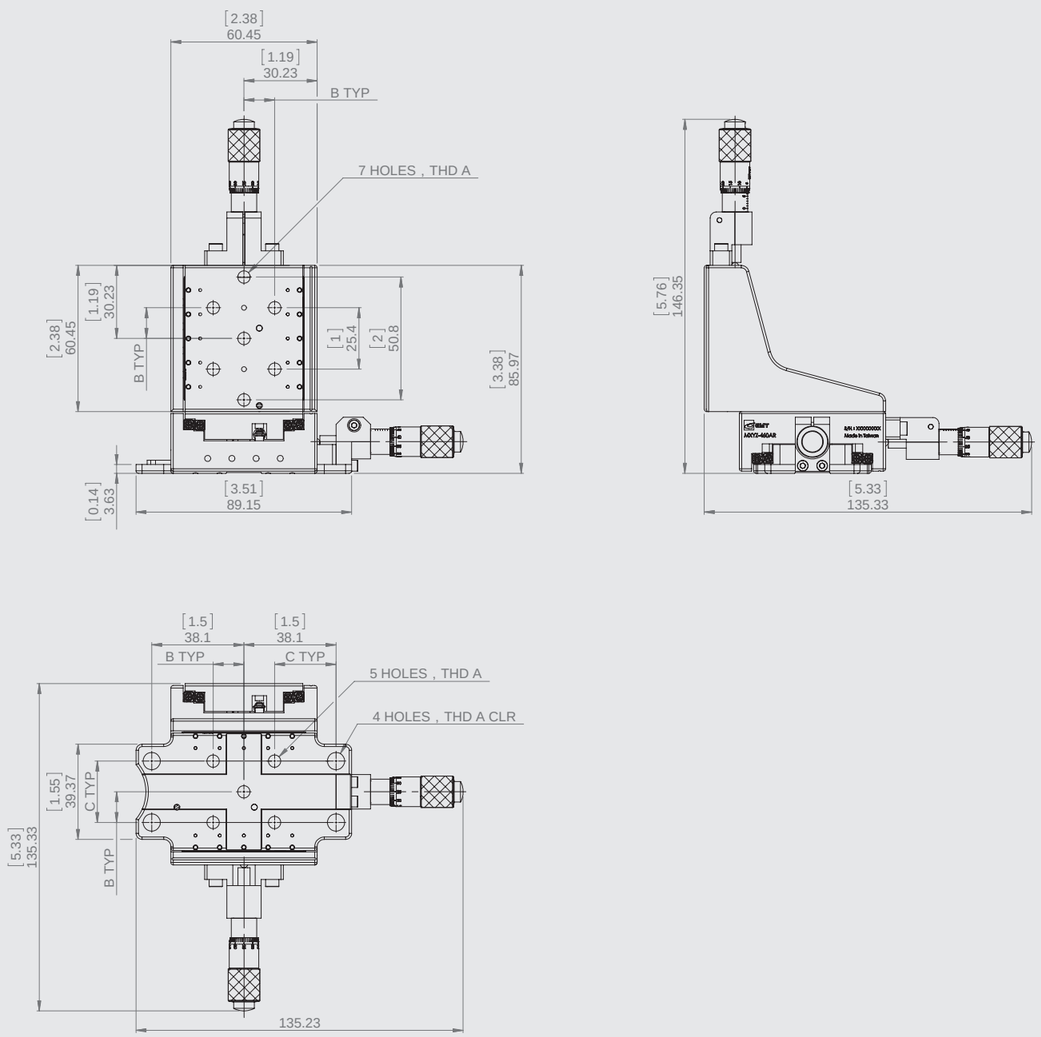

MHGS - F N - 13

Model no. | Front shape | Installation | Travel stroke

GMT	Measurement range	Accuracy	Minimum resolution	Micrometer tolerance	Vernier	Fronttip		Installationway	
Modelno.	mm	mm	mm	μm		Flate	Round	Lock screw	Set screw
MHGS-FN-6.5	0~6.5	0.005	0.01	± 2	Positive scale	●		●	
MHGS-FP-6.5						●			●
MHGS-SN-6.5							●	●	
MHGS-SP-6.5							●		●
MHGS-FN-13	0~13					●		●	
MHGS-FP-13						●			●
MHGS-SN-13							●	●	
MHGS-SP-13							●		●
MHGS-FN-25	0~25					●		●	
MHGS-FP-25						●			●
MHGS-SN-25							●	●	
MHGS-SP-25							●		●
MHGS-FN-50	0~50					●		●	
MHGS-FP-50						●			●
MHGS-SN-50							●	●	
MHGS-SP-50							●		●

- MHGS type (Standard type), is micrometer used widely and frequently
- Gauging plane: SKS3(Hardness: above HRC60)
- Scale part finish: Hard chrome-plating

Purpose

Micrometer, applied to moving equipment in high accuracy, optical adjustment instrument, precise fine tuning stages, various machine tools, gauging instruments, tiny transmission of precise positioning, fixed amount movement.

Installation way

Head of micrometer, classifield as shape for lock screw and set screw.

Fixed form	Lock screw		Set screw	
Installation diagram	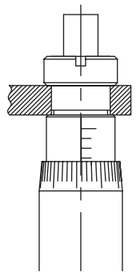		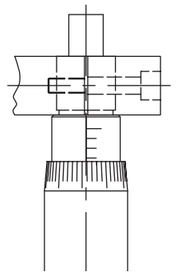	
Shaft die.	Ø6.0	Ø9.525 Ø9.5	Ø6.0	Ø9.525 Ø9.5
Mounting hole tolerance	G7(+0.004~+0.016)	G7(+0.005~+0.020)	G7(+0.004~+0.016)	G7(+0.005~+0.020)
Notice	Right angle opposite to mounting hole A mustbe noticed.If right angle below 0.16/6.5,would affect nothing to fixing.		Pleasse notice burrs caused by inner wall of mounting holes.	
Axial static load	8.63~9.8kN(880~1000kgf)		0.69~0.98kN(70~100kgf)	
Remark	Simply and firmly locked		Locked and welded process	

★ Load data is exlusive of maintaining overall accuracy

Micrometer selection

Points to selection are gauging range, shape of gauging plane, axis part, readable axis, and select micrometers as purposes.

Gauging plane selection

Shaft dimensions are designed by the size fit for assembly of micrometer and body set. Shaft diameter is used by allowable tolerance h6. As gauging instrument, generally used in plane type.

As transfering device, sphere type could decrease errors caused by slanting of mounting portion of micrometer to minimum.

MHGS-FN-6.5

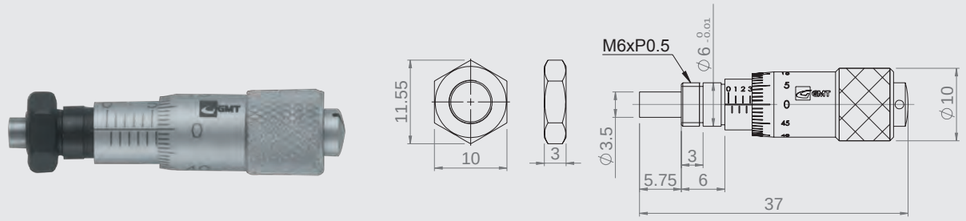

MHGS-FP-6.5

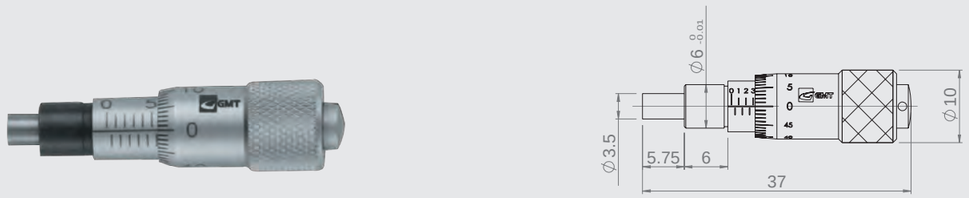

MHGS-SN-6.5

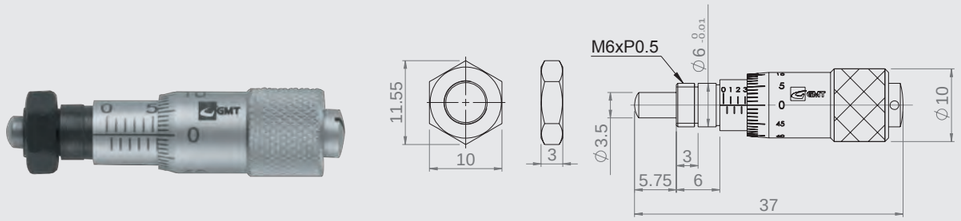

MHGS-SP-6.5

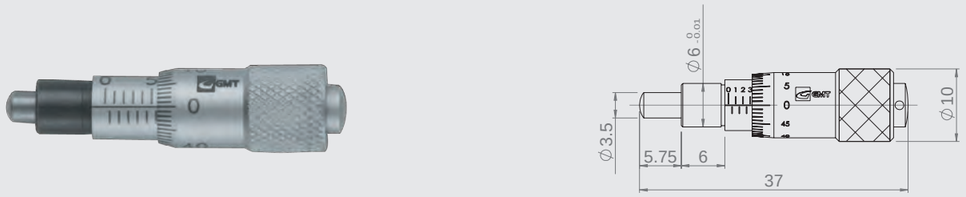

MHGS-FN-13

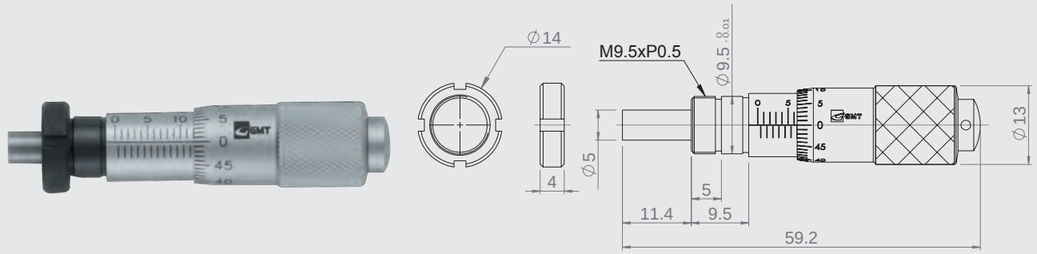

MHGS-FP-13

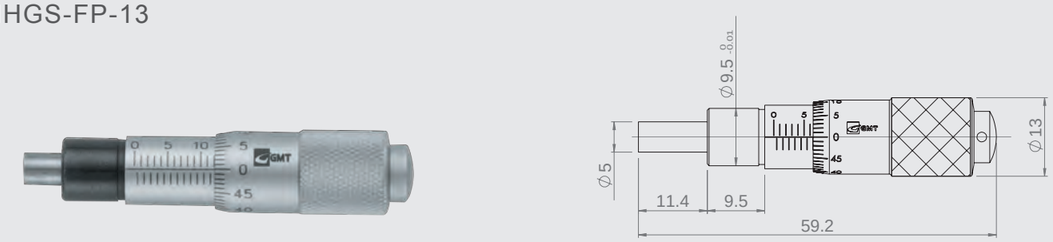

MHGS-SN-13

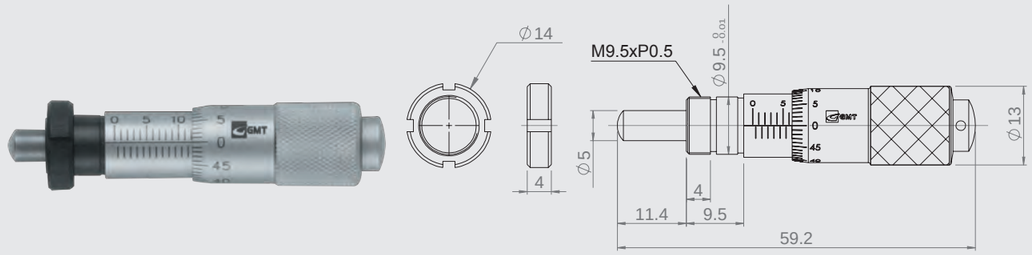

MHGS-SP-13

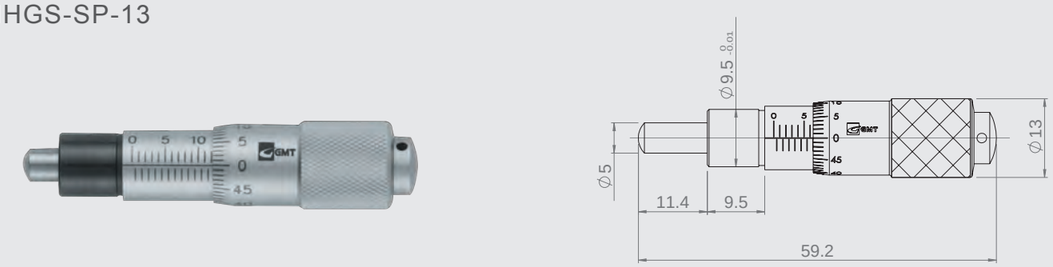

MHGS-FN-15

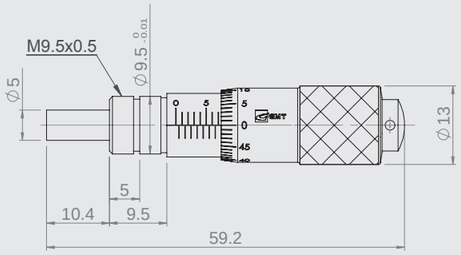

螺帽選用參照：MHGS-FN-13

MHGS-FP-15

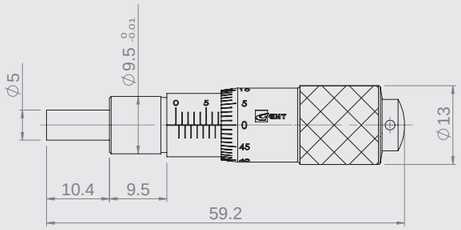

MHGS-SN-15

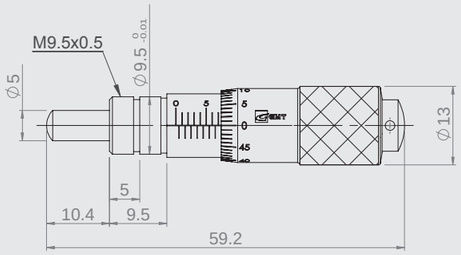

螺帽選用參照：MHGS-FN-13

MHGS-SP-15

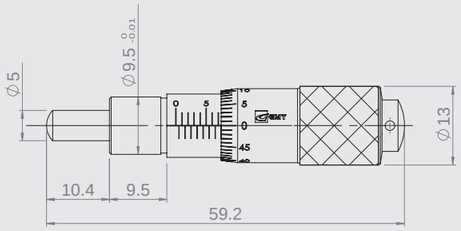

MHGS-FN-25

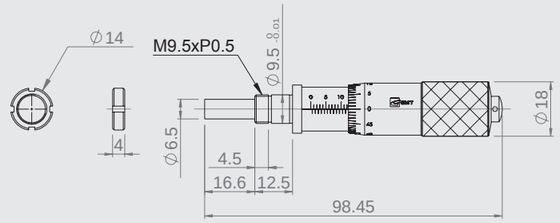

MHGS-FP-25

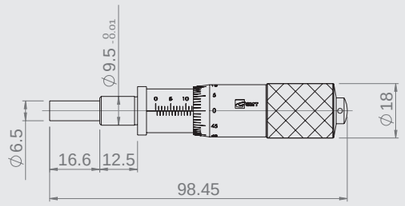

MHGS-SN-25

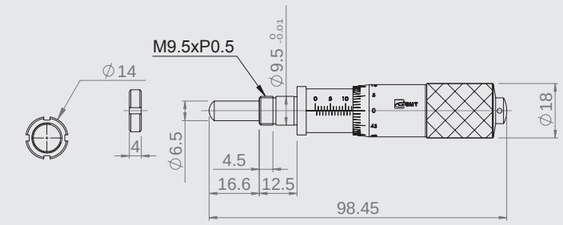

MHGS-SP-25

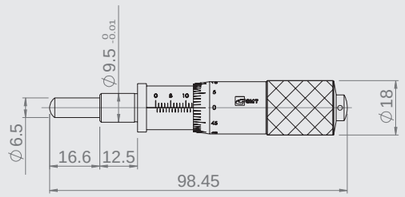

MHGS-FN-50

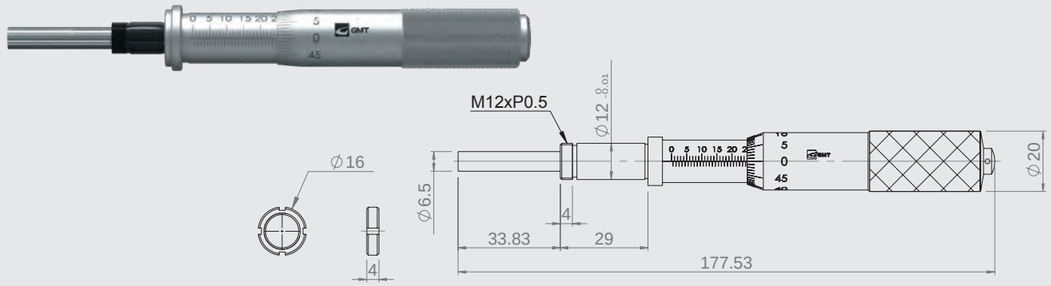

MHGS-FP-50

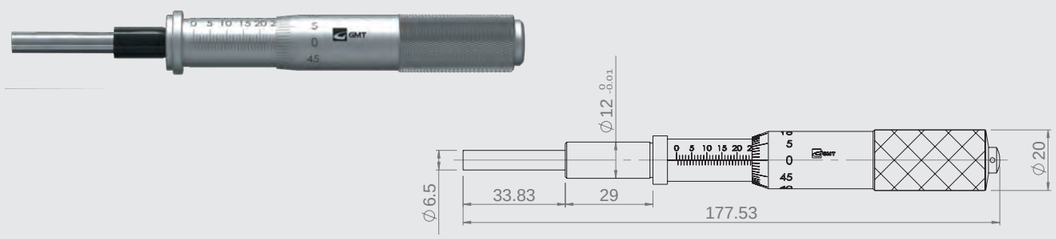

MHGS-SN-50

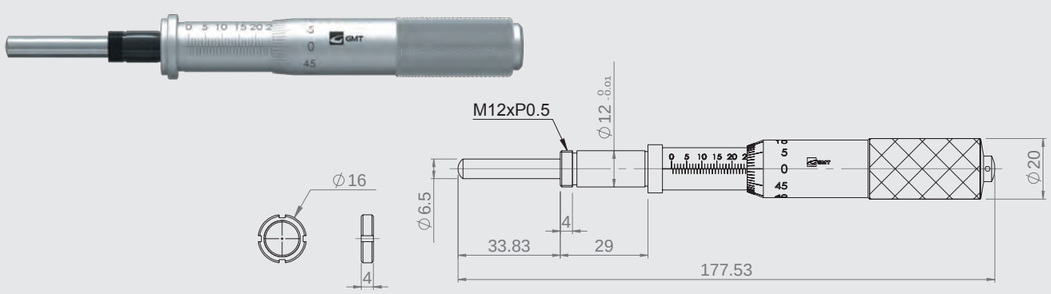

MHGS-SP-50

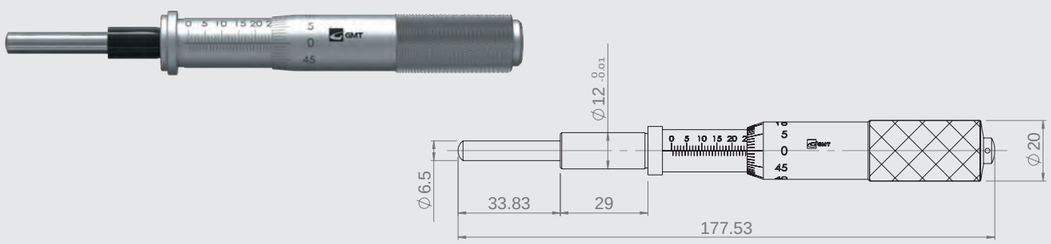

MHGS-SP-6.5A(B)

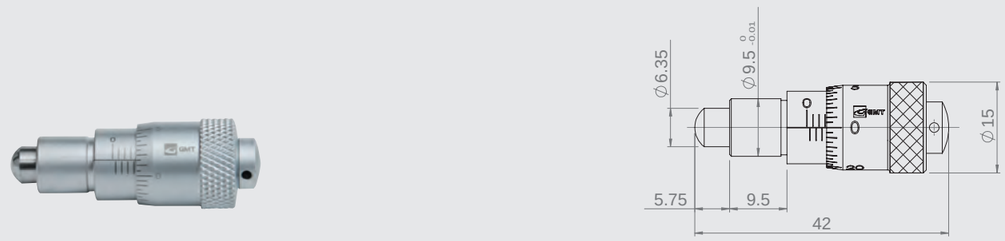

PITCH : A(0.25mm) ; B(0.5mm)

MHGS-FN-25A

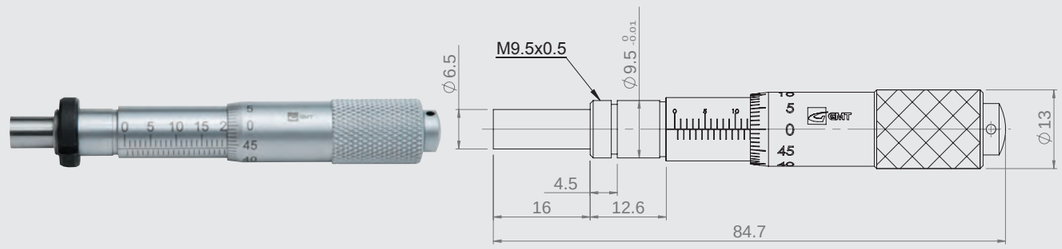

螺帽選用參照：MHGS-FN-13

MHGS-SN-25A

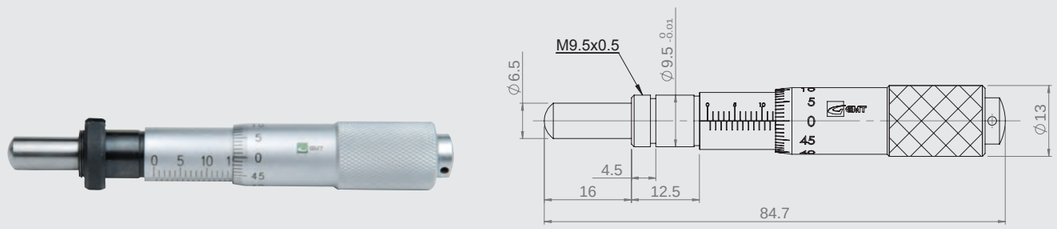

螺帽選用參照：MHGS-FN-13

MHGS-FN-1/2"

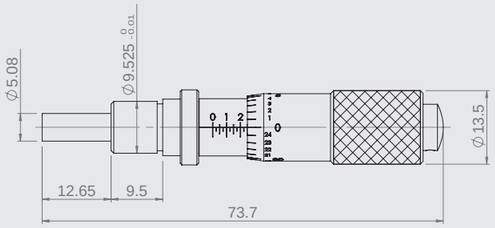

MHGS-FN-2"

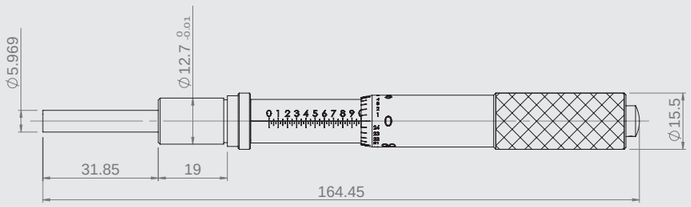

EMHGS-FN-13

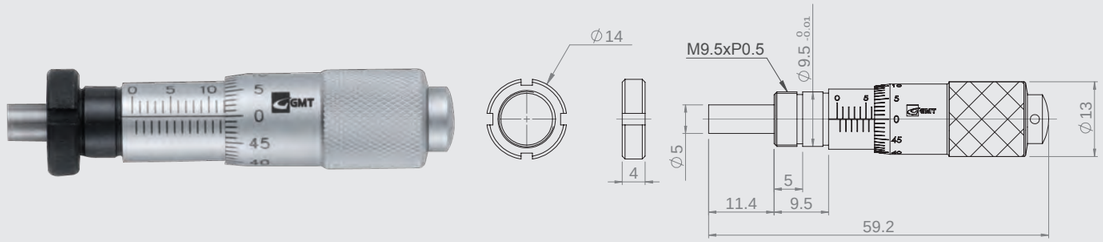

EMHGS-FP-13

EMHGS-SN-13

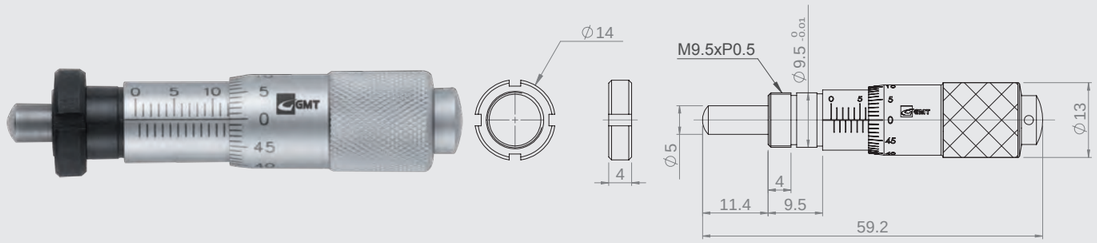

EMHGS-SP-13

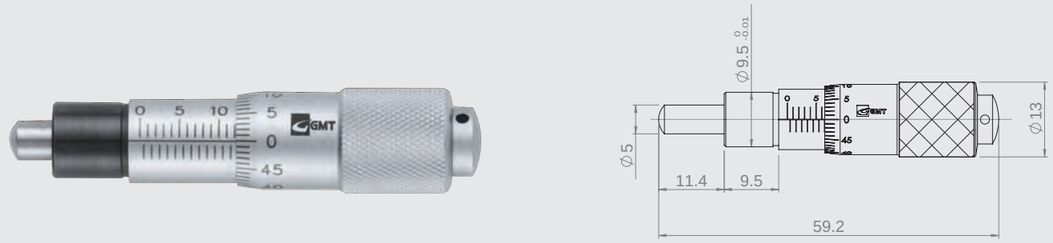

EMHGS-FN-25

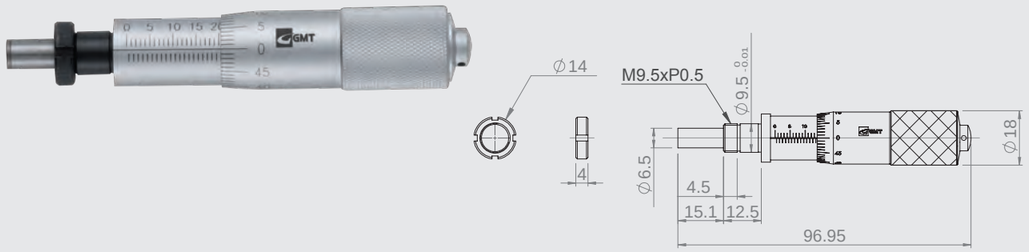

EMHGS-FP-25

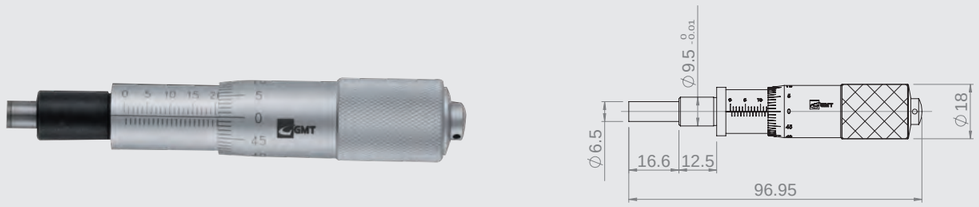

EMHGS-SN-25

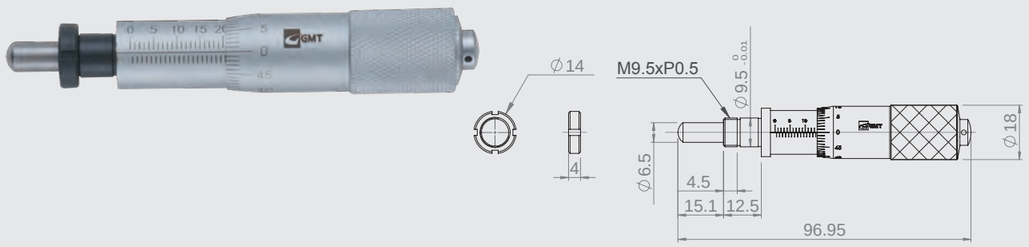

EMHGS-SP-25

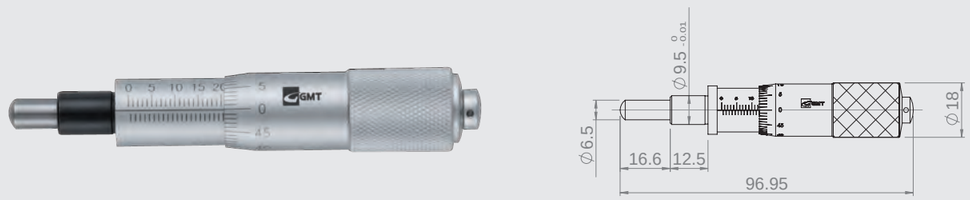

P S 1 R C – 13

Type	Knob type	Lock type	Tooth type /Lead 【mm】	Coding《Travel stroke【mm】》
P:Precision S:Screw	1：Pattern 2：Hexagon socket	M：Thread type R：Cylinder type	N：General type／1 C：Standard type／0.5	07《7》 13《13》 25《25》

Feeding screw selection table

GMT Model		Travel stroke range mm	Accuracy mm	Minimum reading Vernier	Knob type: Pattern	Knob type: Hexagon Socket	Page
PS1R □ -	0 7	0～7	0.03	0.1 mm／Vernier	●		P297
	1 3	0～13			●		
	2 5	0～25			●		
PS2R □ -	0 7	0～7				●	P298
	1 3	0～13				●	
	2 5	0～25				●	
PS1M □ -	0 7	0～7			●		
	1 3	0～13			●		
	2 5	0～25			●		P299
PS2M □ -	0 7	0～7				●	
	1 3	0～13				●	
	2 5	0～25				●	

★Special caution note

- PS1M Series、PS2M Series applied with exclusive wrench.
- Characteristic：Thread parts and bushing parts are both with high precision and able to control shaking.
- Thread part material ：SUS303。

Usage

Feed Screw：can be applied for general precise movement of machine structure, adjusting device and used on various products due to its lower cost than micromete.

Installation

According to customer's requirement, 2 lock types for options :Thread and Cylinder types.

Fixed type	Thread locking	Cylinder locking
Installation method		
Axis diameter	Ø6mm 、 Ø9.5mm	
Installation hole embed toleranc sugesstion	G7【＋0.004～＋0.020】	
Remark	It's simple and rapid lock tightly	Use set screw to lock with assisting parts

★ Feed screw use for transmission device are adopt sphere type which can fix the error of tilt due to feed screw installation to the minimum range, therefore it can avoid stage form precision impact.

Common use lock (3-D diagrams):

Thread type

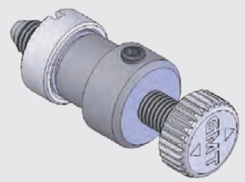

Cylinder type

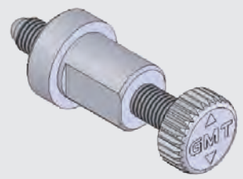

★ Above diagrams are for reference, lock type can be changed on request.

Model no：PS1R □—07；threadscrew：M3x [Pitch：0.25 or 0.5]

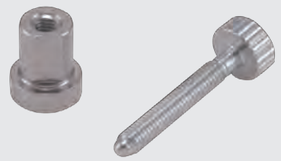

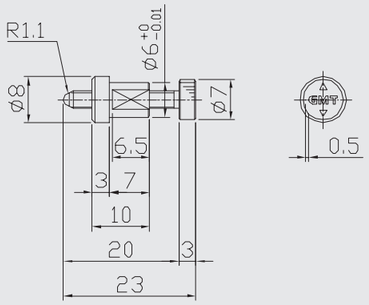

Model no：PS1R □—13；threadscrew：M6x [Pitch：0.25 or 0.5]

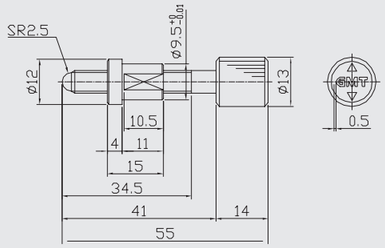

Model no：PS1R □—25；threadscrew：M6x [Pitch：0.5 or 1]

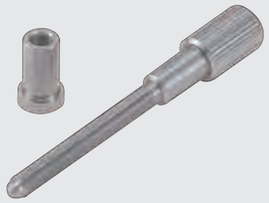

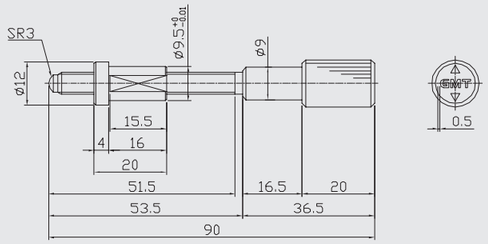

Model no：PS2R □—07；threadscrew：M3x [Pitch：0.25 or 0.5]

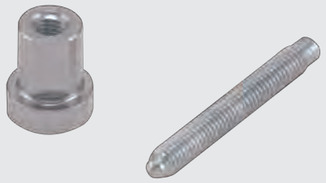

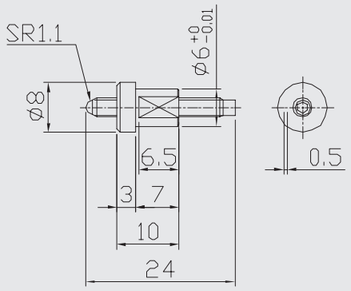

Model no：PS2R □—13；threadscrew：M6x [Pitch：0.25 or 0.5]

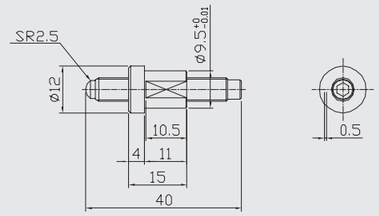

Model no：PS2R □—25；threadscrew：M6x [Pitch：0.5 or 1]

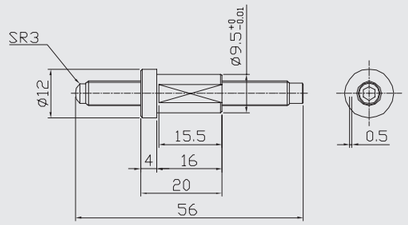

Model no：PS1M □—07；threadscrew：M3x [Pitch：0.25 or 0.5]

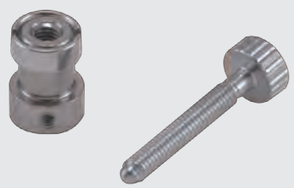

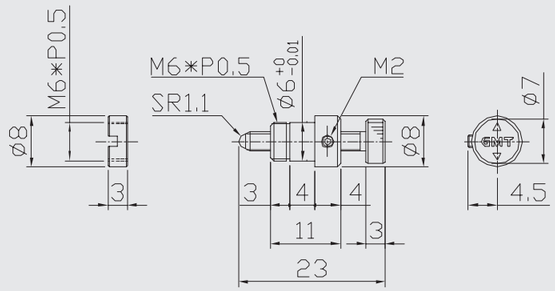

Model no：PS1M □—13；threadscrew：M6x [Pitch：0.25 or 0.5]

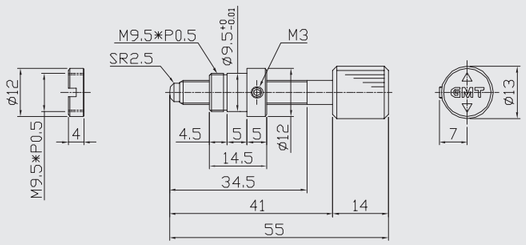

Model no：PS1M □—25；threadscrew：M6x [Pitch：0.5 or 1]

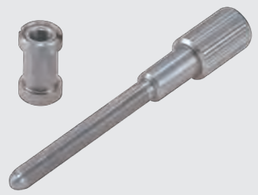

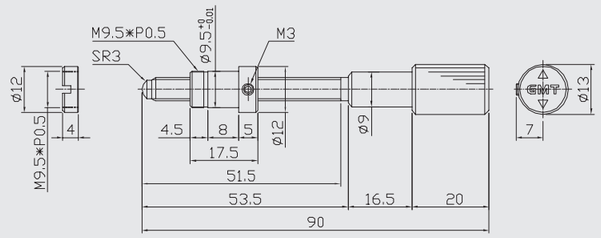

Model no：PS2M □—07；threadscrew：M3x [Pitch：0.25 or 0.5]

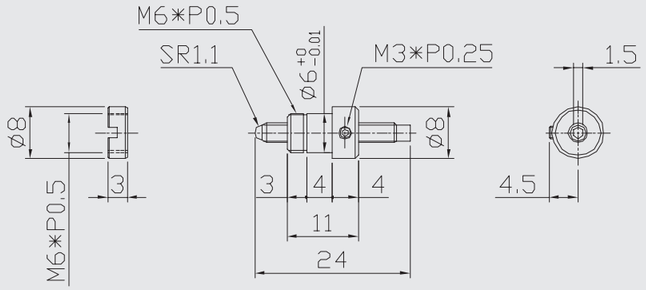

Model no：PS2M □—13；threadscrew：M6x [Pitch：0.25 or 0.5]

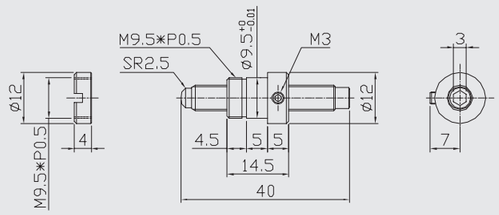

Model no：PS2M □—25；threadscrew：M6x [Pitch：0.5 or 1]

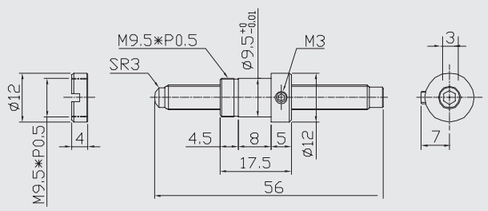

Simplized & rapid adjustment module of CCD monitoring.

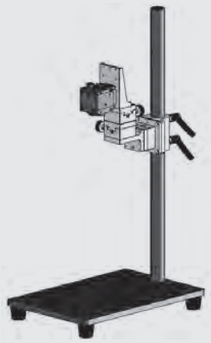

Transparent material membrane thickness measuring module for transparent material.

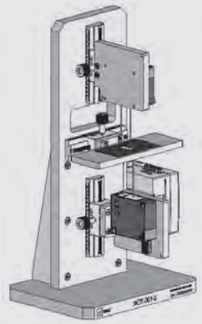

Multiple axes composed Universal fine tuning module with.

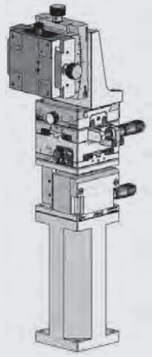

Micro-adjustment module composed multi-axes.

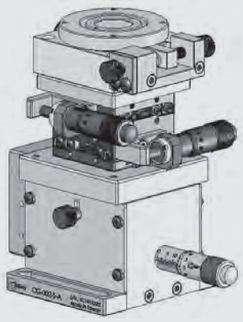

Micro-alignment module of CCD fabricated equipment.

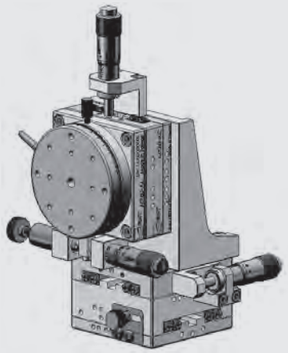

Micro-alignment module for AOI system.

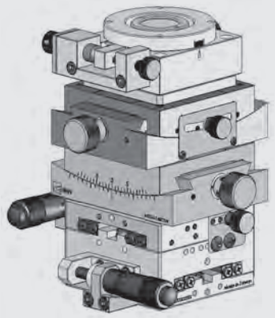

XYR-axis alignment stage module.

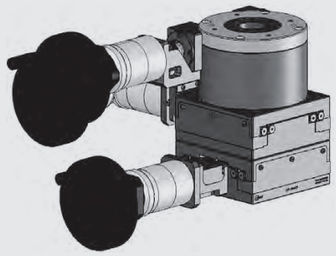

LED wafer characteristic inspection stage module.

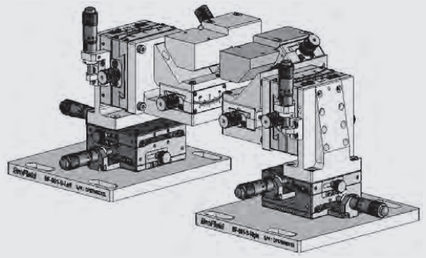

Profile measuring module.

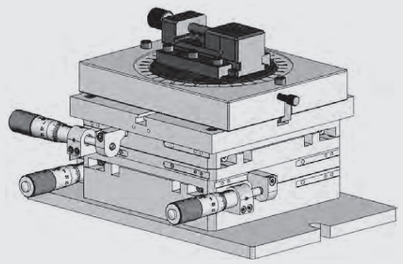

Stage module of surface roughness measuring.

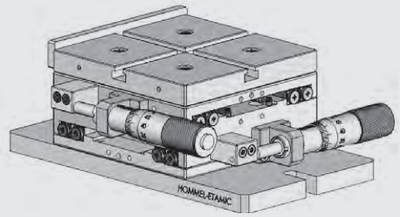

Single axis movement module of large-scale alignment stage.

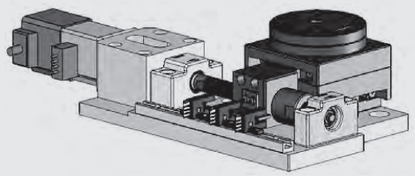

Turning sliding table module equipped mini-size motor.

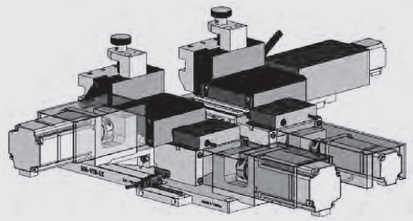

Model Number	Page	Model Number	Page	Model Number	Page	Model Number	Page	Model Number	Page
AIB-4-120-120	234	MC1C-50	154	MC5B-25	166	MCV-44W	173	MNG2E-25CL	201
AIB-4-120-200	234	MC1C-70	153	MC5B-40	166	MCV-44WL	175	MNG2E-40CL	201
AIB-4-120-300	234	MC1D-25	160	MC5B-60	166	MCV-46	173	MNG2E-60CL	201
AIB-4-150-150	234	MC1D-2550	185	MC5D-2550	185	MCV-46L	175	MPS2035-AMR(L)	85
AIB-4-150-200	234	MC1D-40	160	MC6B-35LG	196	MCV-46W	173	MPS20-AMR(L)	84
AIB-4-150-300	234	MC1D-40L	163	MC6D-2550	185	MCV-46WL	175	MPS40-SMR(L)	86
AIB-4-200-200	234	MC1D-60	160	MC6E-25	191	MCV-49	174	MR110-AR	217
AIB-4-200-300	234	MC1E-25	187	MC7G-4050C	194	MCV-49L	176	MR38-AR	217
ASAP-40	233	MC1E-40	187	MC7G-4050F	194	MCV-49W	174	MR50-AR-48	221
ASAP-60	233	MC1E-60	187	MCD-41	172	MCV-49WL	176	MR60-AR	217
ASAP-80	233	MC1F-40	197	MCD-41W	172	MHGS-FN-1/2"	291	MR85-AR	217
AZB100-1	232	MC1G-525C	192	MCD-44	171	MHGS-FN-13	286	MR85-S	221
AZB120-1	232	MC1G-525F	192	MCD-44W	171	MHGS-FN-15	287	MRE110-A	223
AZB40-1	232	MC1G-535C	193	MCD-46	171	MHGS-FN-2"	291	MRE40-A	222
AZB40-2	232	MC1G-535F	193	MCD-46W	171	MHGS-FN-25	288	MRE60-A	222
AZB60-1	232	MC2A-25	135	MCD-49	172	MHGS-FN-25A	290	MRE85-A	223
AZB80-1	232	MC2A-40	135	MCD-49W	172	MHGS-FN-50	289	MRL125-AL	219
AZB80-2	232	MC2A-46S	143	MCM-41	178	MHGS-FN-6.5	285	MRL30-AL	219
EMHGS-FN-13	292	MC2A-49S	143	MCM-41L	180	MHGS-FP-13	286	MRL40-AL	219
EMHGS-FN-25	293	MC2A-60	135	MCM-41W	178	MHGS-FP-15	287	MRL60-AL	219
EMHGS-FP-13	292	MC2A-60CL	139	MCM-41WL	180	MHGS-FP-25	288	MRL90-AL	219
EMHGS-FP-25	293	MC2B-140	150	MCM-44	177	MHGS-FP-50	289	MTB-40	227
EMHGS-SN-13	292	MC2B-40	150	MCM-44L	179	MHGS-FP-6.5	285	MTB-60	227
EMHGS-SN-25	293	MC2B-60	150	MCM-44W	177	MHGS-SN-13	286	MTB-80	227
EMHGS-SP-13	292	MC2B-90	150	MCM-44WL	179	MHGS-SN-15	287	MTS-125	229
EMHGS-SP-25	293	MC2D-25	161	MCM-46	177	MHGS-SN-25	288	MTS-30	229
M3E-2000S-L	255	MC2D-2550	185	MCM-46L	179	MHGS-SN-25A	290	MTS-561-L	271
M3E-2000S-R	257	MC2D-40	161	MCM-46W	177	MHGS-SN-50	289	MTS-561-R	273
M5E-2000B-L	259	MC2D-60	161	MCM-46WL	179	MHGS-SN-6.5	285	MTS-60	229
M5E-2000B-R	261	MC2DA-48NH	164	MCM-49	178	MHGS-SP-13	286	MTS-90	229
M5F-460A561-L	267	MC2E-25	187	MCM-49L	180	MHGS-SP-15	287	MX100-AC	33
M5F-460A561-R	269	MC2E-40	187	MCM-49W	178	MHGS-SP-25	288	MX100-AC-18	75
M6E-2200B-L	263	MC2E-60	187	MCM-49WL	180	MHGS-SP-50	289	MX100-AS	33
M6E-2200B-R	265	MC3B-25	165	MCS-41	170	MHGS-SP-6.5	285	MX100-AS-18	75
MBZ20-AMR(L)	80	MC3B-40	165	MCS-41W	170	MHGS-SP-6.5A(B)	290	MX100-SC	103
MBZ30-AMR(L)	81	MC3B-60	165	MCS-44	169	MLZ30-ASZ	55	MX100-SC-28	129
MC1A-25	134	MC3C-100	157	MCS-44W	169	MLZ40-ASZ	55	MX100-SS	103
MC1A-40	134	MC3C-150	157	MCS-46	169	MLZ60-ASZ	55	MX100-SS-28	129
MC1A-425	145	MC3C-150-2	158	MCS-46W	169	MLZ90-ASZ	55	MX120-AC	35
MC1A-46C	141	MC3C-200	157	MCS-49	170	MMS-125	225	MX120-AC-18	77
MC1A-46L	140	MC3C-200-2	158	MCS-49W	170	MMS-45	225	MX120-AS	35
MC1A-46S	142	MC3C-250	157	MCT-41	182	MMS-65	225	MX120-AS-18	77
MC1A-48KM/R	147	MC3C-300	157	MCT-41L	184	MMS-90	225	MX20-AC	17
MC1A-49L	140	MC3C-300-2	158	MCT-41W	182	MMT-38	224	MX20-AS	17
MC1A-49S	142	MC3C-300-3	159	MCT-41WL	184	MMT-52	224	MX25-AC	19
MC1A-60	134	MC3C-50	157	MCT-44	181	MMT-66	224	MX25-AC-18	61
MC1A-60CL	139	MC3C-70	157	MCT-44L	183	MN1A-12	209	MX25-AS	19
MC1A-A40	137	MC4A-25	136	MCT-44W	181	MN1A-15	209	MX25-AS-18	61
MC1A-A60	137	MC4A-40	136	MCT-44WL	183	MN2A-12	209	MX25-SC	89
MC1AL-40	146	MC4A-49S	144	MCT-46	181	MN2A-15	209	MX25-SC-28	115
MC1B-140	149	MC4A-60	136	MCT-46L	183	MNE1E-20	203	MX25-SS	89
MC1B-35LG	195	MC4A-A60	138	MCT-46W	181	MNE1E-25	203	MX25-SS-28	115
MC1B-40	149	MC4AL-40	146	MCT-46WL	183	MNE1E-40	203	MX30-AC	21
MC1B-60	149	MC4B-140	151	MCT-49	182	MNE1E-60	203	MX30-AC-18	63
MC1B-60F	152	MC4B-40	151	MCT-49L	184	MNE1E-A(B)	207	MX30-AS	21
MC1B-90	149	MC4B-60	151	MCT-49W	182	MNE2E-20	205	MX30-AS-18	63
MC1BL-60	167	MC4B-90	151	MCT-49WL	184	MNE2E-25	205	MX30-SC	91
MC1C-100	153	MC4D-25	162	MCV100-AS	253	MNE2E-40	205	MX30-SC-28	117
MC1C-150	154	MC4D-2550	185	MCV-41	174	MNE2E-60	205	MX30-SS	91
MC1C-150-2	155	MC4D-40	162	MCV-41L	176	MNG1E-20CL	199	MX30-SS-28	117
MC1C-200	154	MC4D-60	162	MCV-41W	174	MNG1E-25CL	199	MX40-AC	23
MC1C-200-2	155	MC4E-25	189	MCV-41WL	176	MNG1E-40CL	199	MX40-AC-18	65
MC1C-250	153	MC4E-40	189	MCV-44	173	MNG1E-60CL	199	MX40-AS	23
MC1C-300-2	156	MC4E-60	189	MCV-44L	175	MNG2E-20CL	201	MX40-AS-18	65

Model Number	Page	Model Number	Page	Model Number	Page	Model Number	Page	Model Number	Page
MX40-SC	93	MXL125-AC	53	MXZ70-S	113	MY70-SS-28	125	MZL40-SCR	105
MX40-SC-28	119	MXL125-AS	53	MXZ80-A	41	MY80-AC	31	MZL40-SS	107
MX40-SS	93	MXL30-AC	45	MXZ80-S	113	MY80-AC-18	73	MZL60-ACR	37
MX40-SS-28	119	MXL30-AS	45	MY100-AC	33	MY80-AS	31	MZL60-AS	39
MX50-AC	25	MXL40-AC	47	MY100-AC-18	75	MY80-AS-18	73	MZL60-SCR	105
MX50-AC-18	67	MXL40-AS	47	MY100-AS	33	MY80-SC	101	MZL60-SS	107
MX50-AS	25	MXL60-AC	49	MY100-AS-18	75	MY80-SC-28	127	MZL80-ACR	37
MX50-AS-18	67	MXL60-AS	49	MY100-SC	103	MY80-SS	101	MZL80-AS	39
MX50-SC	95	MXL90-AC	51	MY100-SC-28	129	MY80-SS-28	127	MZL80-SCR	105
MX50-SC-28	121	MXL90-AS	51	MY100-SS	103	MYCP40-A	82	MZL80-SS	107
MX50-SS	95	MXTH80-FCS	87	MY100-SS-28	129	MYCP60-A	83	PS1M	298
MX50-SS-28	121	MXY-460AL	275	MY120-AC	35	MYG3-30CE	243	PS1M	299
MX60-AC	27	MXY-460AR	277	MY120-AC-18	77	MYG3-44CE	243	PS1R	297
MX60-AC-18	69	MXYR38-A	43	MY120-AS	35	MYG4-25CS	237	PS2M	299
MX60-AS	27	MXYR60-A	43	MY120-AS-18	77	MYG4-40CS	237	PS2R	297
MX60-AS-18	69	MXYR85-A	43	MY20-AC	17	MYG4-50CE	245	PS2R	298
MX60L-SS-28	131	MXYWR38-A	44	MY20-AS	17	MYG4-68CE	245		
MX60-SC	97	MXYWR60-A	44	MY25-AC	19	MYG5-50CS	239		
MX60-SC-28	123	MXYWR85-A	44	MY25-AC-18	61	MYG5-68CS	239		
MX60-SS	97	MXYWZA40-A	43	MY25-AS	19	MYG6-35-CS	237		
MX60-SS-28	123	MXYWZA60-A	43	MY25-AS-18	61	MYG6-60-CS	237		
MX70-AC	29	MXYWZA80-A	43	MY25-SC	89	MYG6-70CE	247		
MX70-AC-18	71	MXYWZAR38-A	44	MY25-SC-28	115	MYG6-96CE	247		
MX70-AS	29	MXYWZAR60-A	44	MY25-SS	89	MYL125-AC	53		
MX70-AS-18	71	MXYWZAR85-A	44	MY25-SS-28	115	MYL125-AS	53		
MX70-SC	99	MXYZ100-A	42	MY30-AC	21	MYL30-AC	45		
MX70-SC-28	125	MXYZ100-S	114	MY30-AC-18	63	MYL30-AS	45		
MX70-SS	99	MXYZ120-A	42	MY30-AS	21	MYL40-AC	47		
MX70-SS-28	125	MXYZ25-A	42	MY30-AS-18	63	MYL40-AS	47		
MX764-AC-SHR	79	MXYZ25-S	114	MY30-SC	91	MYL60-AC	49		
MX80-AC	31	MXYZ30-A	42	MY30-SC-28	117	MYL60-AS	49		
MX80-AC-18	73	MXYZ30-S	114	MY30-SS	91	MYL90-AC	51		
MX80-AS	31	MXYZ40-A	42	MY30-SS-28	117	MYL90-AS	51		
MX80-AS-18	73	MXYZ40-S	114	MY40-AC	23	MYW100-AS	57		
MX80-SC	101	MXYZ-460AL	279	MY40-AC-18	65	MYW100-SC	111		
MX80-SC-28	127	MXYZ-460AR	281	MY40-AS	23	MYW100-SS	109		
MX80-SS	101	MXYZ50-A	42	MY40-AS-18	65	MYW40-AC	59		
MX80-SS-28	127	MXYZ50-S	114	MY40-SC	93	MYW40-AS	57		
MXG3-30CE	243	MXYZ60-A	42	MY40-SC-28	119	MYW40-SC	111		
MXG3-44CE	243	MXYZ60-S	114	MY40-SS	93	MYW40-SS	109		
MXG3-57CE	243	MXYZ70-A	42	MY40-SS-28	119	MYW60-AC	59		
MXG4-25CS	235	MXYZ70-S	114	MY50-AC	25	MYW60-AS	57		
MXG4-40CS	235	MXYZ80-A	42	MY50-AC-18	67	MYW60-SC	111		
MXG4-40VM	249	MXYZ80-S	114	MY50-AS	25	MYW60-SS	109		
MXG4-50CE	245	MXYZA40-A	43	MY50-AS-18	67	MYW80-AS	57		
MXG4-60CS	235	MXYZA60-A	43	MY50-SC	95	MYW80-SC	111		
MXG4-60VM	249	MXYZA80-A	43	MY50-SC-28	121	MYW80-SS	109		
MXG4-68CE	245	MXYZAR38-A	44	MY50-SS	95	MZA1-5060	213		
MXG4-80VM	249	MXYZAR60-A	44	MY50-SS-28	121	MZA-25	211		
MXG4-86CE	245	MXYZAR85-A	44	MY60-AC	27	MZA2-5060	213		
MXG5-50CS	239	MXZ100-A	41	MY60-AC-18	69	MZA3-5060	213		
MXG5-50VM	249	MXZ100-S	113	MY60-AS	27	MZA-40	211		
MXG5-68CS	239	MXZ120-A	41	MY60-AS-18	69	MZA-40H	211		
MXG5-86CS	239	MXZ25-A	41	MY60-SC	97	MZA-60	211		
MXG6-100VM	251	MXZ25-S	113	MY60-SC-28	123	MZA-60L	211		
MXG6-122CE	247	MXZ30-A	41	MY60-SS	97	MZA-80	211		
MXG6-35CS	235	MXZ30-S	113	MY60-SS-28	123	MZF-120	215		
MXG6-50VM	251	MXZ40-A	41	MY70-AC	29	MZF-80	215		
MXG6-60CS	235	MXZ40-S	113	MY70-AC-18	71	MZL25-ACR	37		
MXG6-70CE	247	MXZ50-A	41	MY70-AS	29	MZL25-AS	39		
MXG6-75VM	251	MXZ50-S	113	MY70-AS-18	71	MZL25-SCR	105		
MXG6-80CS	235	MXZ60-A	41	MY70-SC	99	MZL25-SS	107		
MXG6-96CE	247	MXZ60-S	113	MY70-SC-28	125	MZL40-ACR	37		
MXG9-118CSW	241	MXZ70-A	41	MY70-SS	99	MZL40-AS	39		