GMT GLOBAL INC.

LASER AND

302-2725 Rue Notre Dame
Montreal, QC, H8S 2H3
CANADA
+1 (514) 452-4693
sales@laserand.com

www.laserand.com

2014.05.12

A.C Design 04-27071159

1 BALL SCREW SUPPORT BEARING 2014

Ball Screw Support Bearing

GMT GLOBAL INC.

GMT GLOBAL INC.

Support Unit Introduction	Model Number Description	P.2 ~ P.4
	Support Bearing Categories / Pre-loaded Description	P.5 ~ P.7
	Assembly Model / Assembly Process / Inspection Description	P.8 ~ P.10
	Support Bearing Figuration	P.11 ~ P.13
Fixed Side Standard Type	GAK /GBK /GEK / GFK	P.14 ~ P.21
Fixed Side Economic Type	GAK / GBK / GEK / GFK	P.22 ~ P.29
Support Side	GAF / GBF / GEF / GFF	P.30 ~ P.37
Fixed Side Heavy Loading Type	GWFF	P.38 ~ P.39
Fixed Side Standard Type	GSW / GSWE / GRW / GRWE	P.40 ~ P.47
Support Side Standard Type	GUN / GTN / GUR / GTR	P.48 ~ P.55
Luck Nut / Rectangle - Light Loading Usage	GRLN	P.56
Luck Nut / Round - Heavy Loading Usage	GCLN	P.57
Space Ring	GSR	P.57
Technical Information	Bearing Numbers Data	P.58 ~ P.60
	Rated RPM & Loading Reference Data	P.61 ~ P.62
	GMT & Others Comparison	P.63

◎On the basis of the execution of the best service and product innovation, GMT hereby would have this declaration of retaining the right for engineering change. If any drawings or articles revised and added in the catalogs, there would be no extra further notice.To get most up-to-day information, please contact our agent or sales while necessary.

GBK - 20 - S L B - J

Model	Size	Grade	Pre-loaded	Surface Finish	Bearing Category

GBK	Model	GAK / GSW / GSWE：Fixed Side-Rectangle Design GFK / GRW / GRWE：Fixed Side-Flange Design GBK：Fixed Side-Two way Mounting Design GEK：Fixed Side-Protruding Design
20	Size	GAK：06~25 / GSW：06~25 / GSWE：10~25 GFK：06~30 / GRW：06~25 / GRWE：10~25 GBK：10~40 / GEK：06~20

Note : 1. Fixed Side sizes are referred to bearing nominal dimensions.

S	Grade	S：Standard(Integrated Angular Contact Ball Bearings) ER：Economic Type,high rigid assembly without axial play. (Integrated with deep-groove ball bearings) EG：Eonomic Type,universal assembly with axial play. (Integrated with deep-groove ball bearings)

Note : ER and EG models are not specified with pre-loaded.

L	Pre-loaded	L：Light Pre-loaded M：Medium Pre-loaded H：Heavy Pre-loaded
B	Surface Finish	B：Black Dyed N：Nickel Plating
J	Bearing Category	J：Japanese series T：Taiwanese series

GEF - 20 - S B - J

Model	Size	Grade	Surface Finish	Bearing Category

GEF	Model	GAF：Support Side-Rectangle Design GFF / GUR / GTR：Support Side-Flange Design GBF：Support Side-Two way Mounting Design GEF / GUN / GTN：Support Side-Protruding Design
20	Size	GAF：06~25 / GUN：06~25 / GTN：06~25 GFF：06~30 / GUR：06~25 / GTR：06~25 GBF：10~40 / GEF：06~20

Note：1. Support side size 06 and 15 ~ 40 are referred to bearing nominal dimensions.
2. Support side size:
- size 08 = bearing i.d. Ø6
- size 10 = bearing i.d. Ø8
- size 12 = bearing i.d. Ø10

S	Grade	S：Standard
B	Surface Finish	B：Black Dyed N：Nickel Plating
J	Bearing Category	J：Japanese series T：Taiwanese series

GWFF - 20 - B - DFD - J

Model	Size	Surface Finish	Bearing Combination	Bearing Category

GWFF	Model	GWFF：Heavy Loading
20	Size	GWFF：17~40
B	Surface Finish	B：Black Dyed N：Nickel plating
DFD	Bearing combination	DF： Face to face DFD: Face to back to face
J	Bearing category	J：Japanese series T：Taiwanese series

Notes：1. Fixed side sizes are referred to bearing nominal dimensions.
2. GWFF model is applied TAC series angular 60 degrees contact bearings.

Support Unit Categories

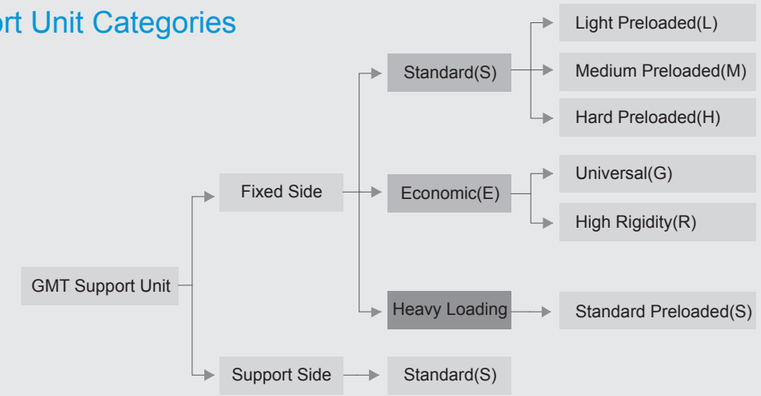

Differential points between GMT Standard & Economic category：

Standard type
- Fixed side：Applied angular contact bearings to perform pre-loaded for three different usages - light preloaded, medium preloaded, heavy preloaded.
- Support side：Applied deep-groove bearings.

Economic type：Applied deep-groove bearings to rigid assembly and universal assembly types.

Heavy loading：Applied TAC series angular 60 degree contact bearing to perform heavy pre-loaded. Options of DF or DFD combination per application.

Preload selection and applications：

Preload	Machine Requirements	Application Examples
Light (L)	Equipments with small vibration and small thrust, load in one fixed direction. High accuracy is not required. Reduction of frictional force.	Laser welder, small CNCmill machine, cutter, welder, automatic tool changer, packing machine, material supply equipment.
Medium (M)	Equipments with load on a post. Equipments with a torque acting on it. Equipments working in one direction. Equipments with low load. Equipments with high accuracy.	Automated feeder, linear feeder, automatedpainting machine, precision slide table, Z-axis control on machines, PC board punch machine. Industrial robot, EDM machine, NC lathe.
Hard(H)	High rigidity, high vibration, high thrust equipments. High load, high torque equipments.	Machining center spindle, NC lathe, Z-axis spindle of the machinery, milling machine, grinding wheel feeding of grinding machine.

Pre-Loaded Description：

Purpose of Preloaded：

1. Increase the rotational accuracy of axle
2. Increase the rigidity of axle
3. Reduce unwanted clearance
4. Reduce vibration and noise while bearing stops.

What is bearing preload?

The preload describes the process wherein a permenant thrust road is applied to the bearing, so that the bearing is secure in the groove and has no axial clearence.
Apply normal force (N). Measure value of L of a pair of bearings. L=L1+L2.
Press these pair of bearings on the covers to apply preload and bring these bearings together.

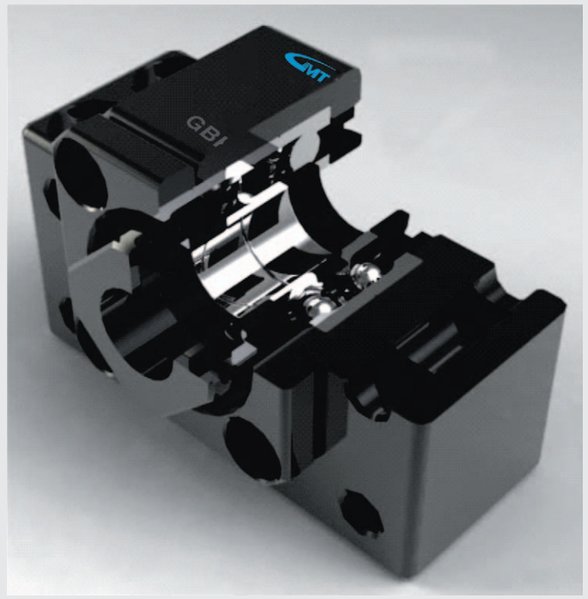

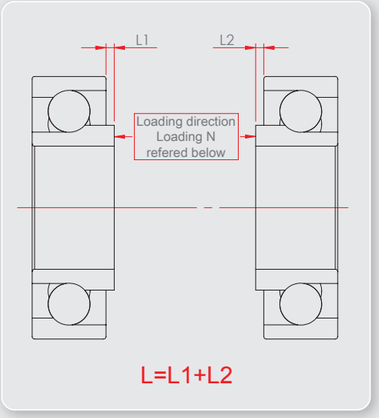

Assembly Models：

Rectangle Design

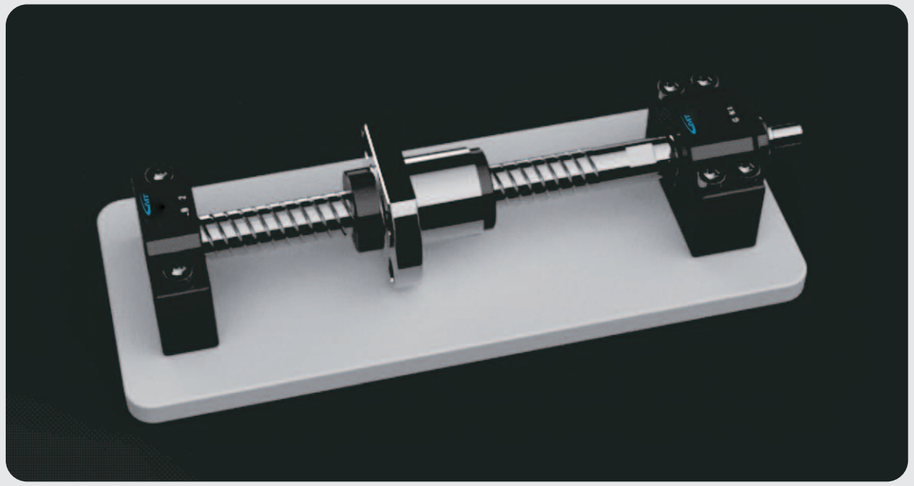

◆ Assembly features : The rectangle design is fited to plane structure which is available for lower assembly required high rigidty applications.

Flange Design

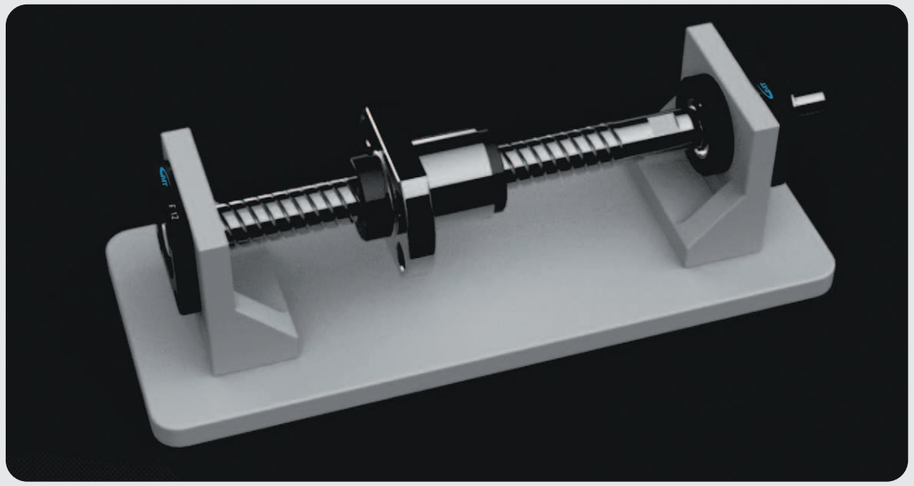

◆ Assembly features : The round design is fited to suspension and spindle structure which is able to be assembled freely according to the equipment height.

Assemble The Support Unit to Ballscrew

(1)No disassembly to the support unit fixed side.
(2)Install ballscrew to the fixed side with care not to scratch the external lip of the seal.
(3)Assembly sequence : Install the first space ring to the ballscrew→Install ballscrew to the Fixed Side→Install the second space ring to the ballscrew→Install the Luck nut (tighten after installation)→Install the support side and deep-groove-bearings to the ballscrew→Buckle the snap ring.

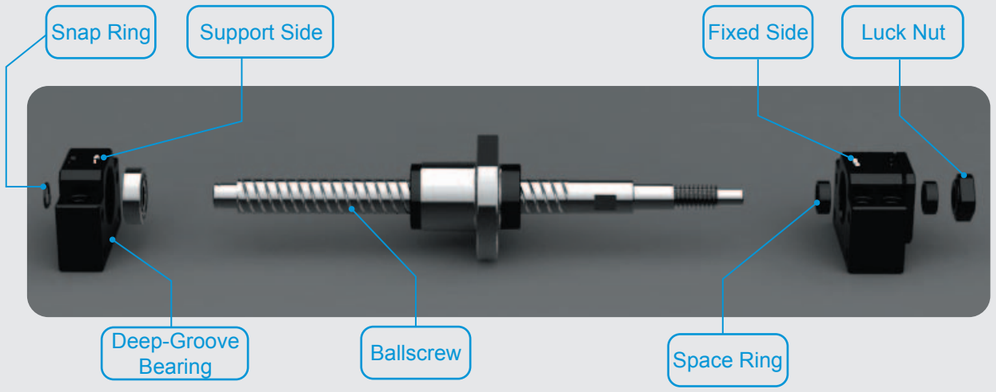

Assemble The Working Table and Base

Combine ballscrew with the working table→Combine the fixed side with the base→Combine ballscrew with the fixed side→Combine support side and ballscrew→Combine the support side and the base.

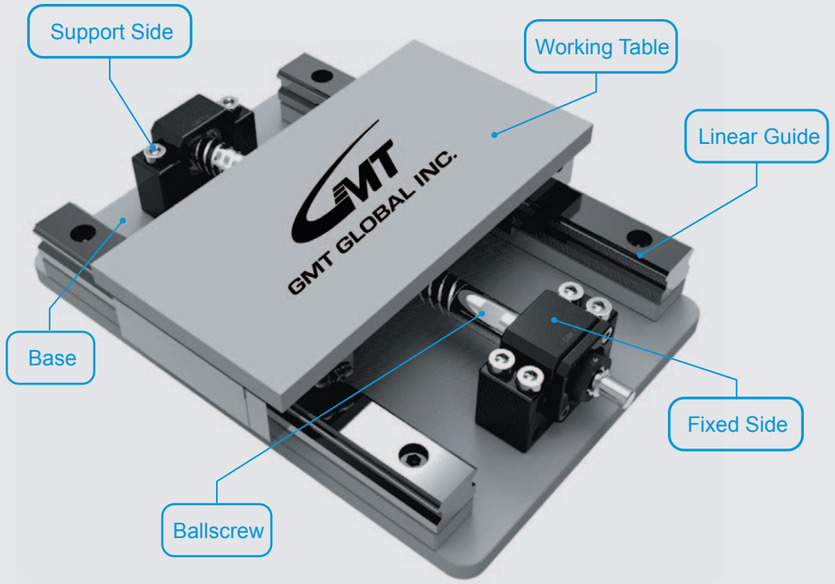

Calibration and Adjustment

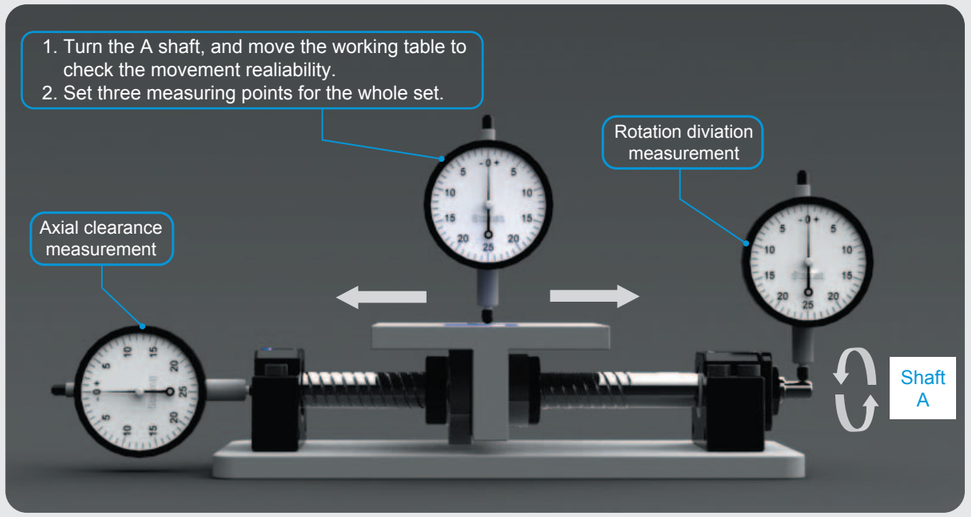

Assembly with motor

1. Combine the base with the motor bracket.
2. Install the coupling to the motor shaft with the bracket, and calibrate the assembly accuracy.
3. Make trial turning of the motor after installation.

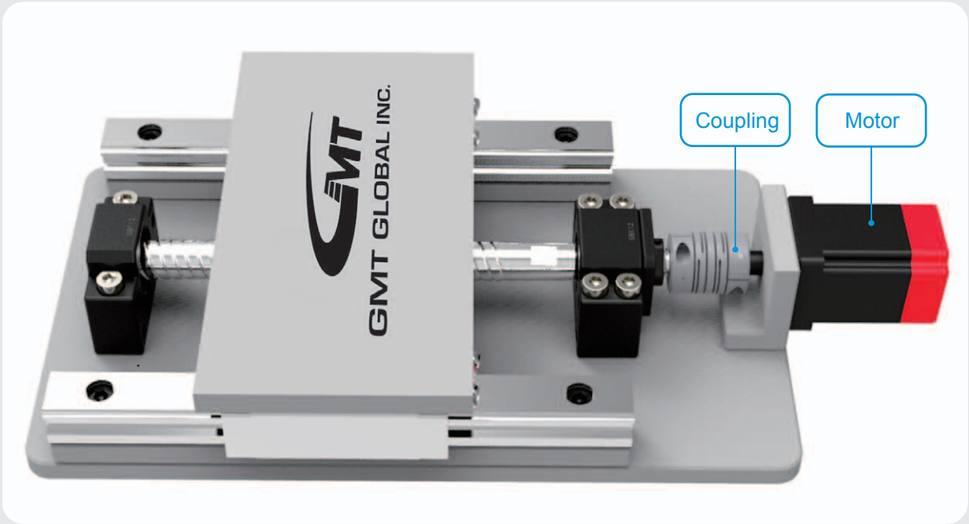

GMT Support Unit Inspection - Rectangle & Protruding Design

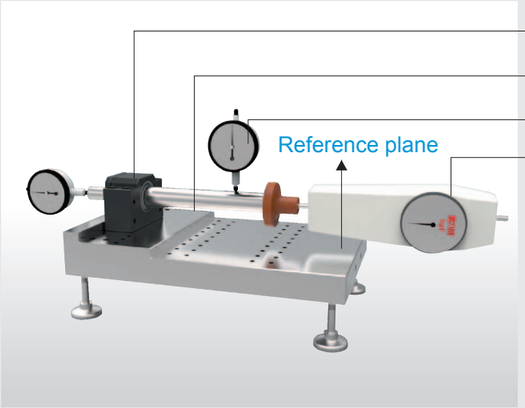

GMT Support Unit Inspection - Round Design

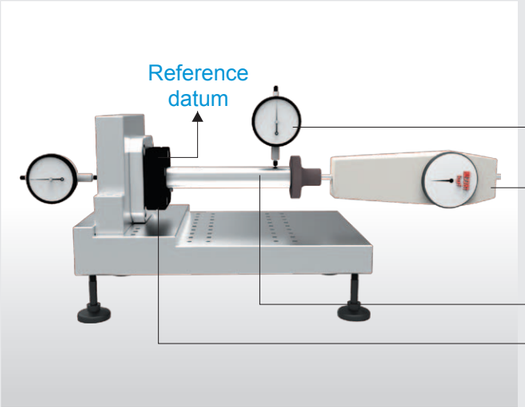

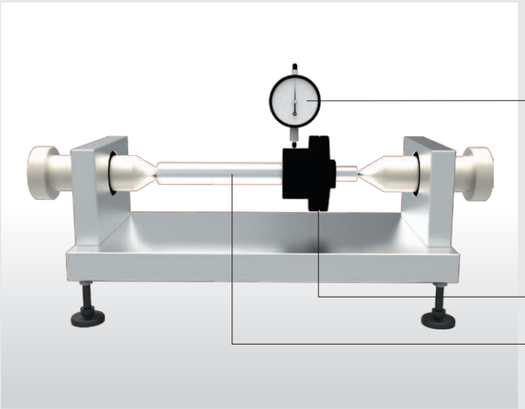

GAK：Fixed Side Standard P.14~P.15 Economic P.22~P.23		GBK：Fixed Side Standard P.16~P.17 Economic P.24~P.25	
GAK - B Black Dyed	GAK - N Ni-Plating	GBK - B Black Dyed	GBK - N Ni-Plating

GEK：Fixed Side Standard P.18~P.19 Economic P.26~P.27		GFK：Fixed Side Standard P.20~P.21 Economic P.28~P.29	
GEK - B Black Dyed	GEK - N Ni-Plating	GFK - B Black Dyed	GFK - N Ni-Plating

GAF：Support Side Standard P.30~P.31		GBF：Support Side Standard P.32~P.33	
GAF - B Black Dyed	GAF - N Ni-Plating	GBF - B Black Dyed	GBF - N Ni-Plating

GEF：Support Side Standard P.34~P.35		GFF：Support Side Standard P.36~P.37	
GEF - B Black Dyed	GEF - N Ni-Plating	GFF - B Black Dyed	GFF - N Ni-Plating

GWFF：Fixed Side Heavy Loadingt	P.38~P.39
GWFF - B - DF Black Dyed	GWFF - N - DF Ni-Plating
	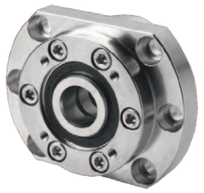

GSW：Fixed Side	Standard P.40~P.41	GSWE：Fixed Side	Standard P.42~P.43
GSW - B Black Dyed	GSW - N Ni-Plating	GSWE - B Black Dyed	GSWE - N Ni-Plating

GRW：Fixed Side	Standard P.44~P.45	GRWE：Fixed Side	Standard P.46~P.47
GRW - B Black Dyed	GRW - N Ni-Plating	GRWE - B Black Dyed	GRWE - N Ni-Plating

GUN：Support Side	Standard P.48~P.49	GTN：Support Side	Standard P.50~P.51
GUN - B Black Dyed	GUN - N Ni-Plating	GTN - B Black Dyed	GTN - N Ni-Plating

GUR：Support Side	Standard P.52~P.53	GTR：Support Side	Standard P.54~P.55
GUR - B Black Dyed	GUR - N Ni-Plating	GTR - B Black Dyed	GTR - N Ni-Plating

GRLN：Lock Nut/Light Loating P.56		GCLN：Lock Nut/Heavy Loading P.57		GSR：Space Ring P.57	
GRLN - B Black Dyed	GRLN - N Ni-Plating	GCLN - B Black Dyed	GCLN - N Ni-Plating	GSR - B Black Dyed	GSR - N Ni-Plating

Selection Notes (Refer to Page 2, 3, 4)

[Model]：Pick up the model according to assembly method.

Assembly：1.Plane mounting：GAK、GBK、GEK、GAF、GBF、GEF、GSW GSWE、GUN、GTN.

2.Suspension and spindle mount：GFK、GRW、GRWE、GFF GUR、GTR。

[Size]：Decide the size according to the ballscrew shaft O.D., and the center height.

[Grade]：Standard and economic types for options.

[Pre-loaded]： Decide pre-loaded of the bearing per needs.

[Surface Finish]：Black dyed - Regular environment use, low humidity.
Nickel plating - Clean room use.

[Bearing category]： Available Japanese series and Taiwanese series.

Model No.	Parts no. ①③④⑥	
	Material	Surface Finish
GAK □□ - S □B	S50C	Black Dyed
GAK □□ - S □N		Ni-Plating

GAK10 ~ GAK20

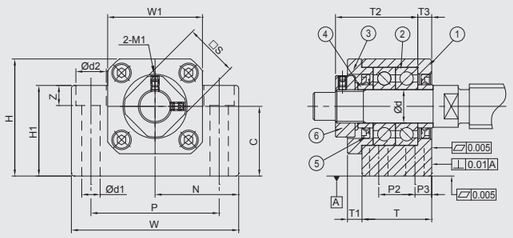

GAK06 ~ GAK08

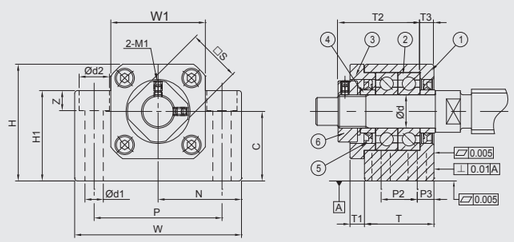

GAK25

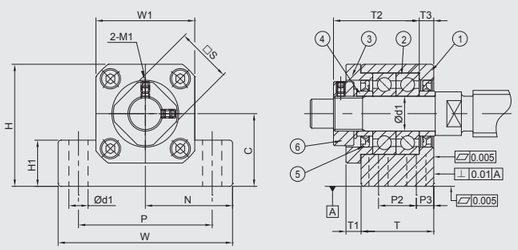

Specification

Standard Type			Dimensions														
Light pre-loaded	Medium pre-loaded	Hard pre-loaded	Ød	T	T1	T2	T3	W	W1	H	H1	N ±0.02	C	P	P2	P3	Ød1
GAK06-SL □	GAK06-SM □	GAK06-SH □	6	20	5.5	22	3.5	42	18	25	20	21	$13^{0}_{-0.02}$	30	-	-	5.5
GAK08-SL □	GAK08-SM □	GAK08-SH □	8	23	7	26	4	52	25	32	26	26	$17^{0}_{-0.02}$	38	-	-	6
GAK10-SL □	GAK10-SM □	GAK10-SH □	10	24	6	29.5	6	70	36	43	35	35	$25^{0}_{-0.02}$	52	-	-	8.7
GAK12-SL □	GAK12-SM □	GAK12-SH □	12	24	6	29.5	6	70	36	43	35	35	$25^{0}_{-0.02}$	52	-	-	8.7
GAK15-SL □	GAK15-SM □	GAK15-SH □	15	25	6	32	5	80	40	50	40	40	$30^{0}_{-0.02}$	60	-	-	10.7
GAK20-SL □	GAK20-SM □	GAK20-SH □	20	42	10	50	10	95	56	58	45	47.5	$30^{0}_{-0.02}$	75	22	10	10.7
GAK25-SL □	GAK25-SM □	GAK25-SH □	25	48	13	60	14	105	66	68	25	52.5	$35^{0}_{-0.02}$	85	30	9	11

Ordering Example	GAK	-	10	-	SL	-	N	-	J
	Model No.		Shaft Dia.		Grade/Pre-loaded		Surface finish		Bearing category

GAK-B

GAK-N

Components

No.	Parts	Material	Q´ty
①	Main housing	S50C	1
②	Bearing	SUJ2	1 pair
③	Cover	S50C	1
④	Space ring	S50C	2
⑤	Seal (<Ø8 one seal only)	NBR	2
⑥	Lucknut	S50C	1

- ①②③ are in one unit. No disassemble for accuracy concern.
- Bearing filled with proper lithium soap lubricant and sealed.

Recommended processing dimensions of shaft

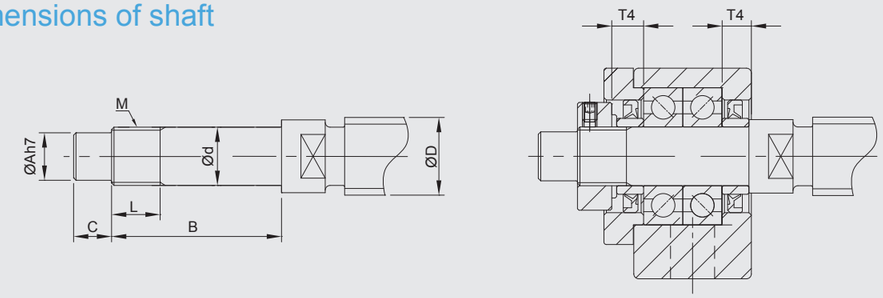

Unit：mm

				Recommended processing dimensions of shaft							
				Ball Screw Shaft O. D.	Shaft End Diameter	Processing sizes of shaft			Nominal thread		Space ring length
Ød2	Z	M1	□S	ØD	Ød	ØA	B	C	M	L	T4
9.5	7	M3	12	8 / 10	$6^{-0.005}_{-0.012}$	5	27	8	M6*P0.75	6	5
11	12	M3	14	10 / 12	$8^{-0.005}_{-0.012}$	6.5	31.5	7.5	M8*P1.0	7	5.5
14	11	M3	16	12 / 14 / 15	$10^{-0.005}_{-0.012}$	8	36	15	M10*P1.0	11	5.5
14	11	M3	19	14 / 15 / 16	$12^{-0.005}_{-0.012}$	10	36	15	M12*P1.0	11	5.5
17	15	M3	22	18 / 20	$15^{-0.005}_{-0.014}$	12	47	20	M15*P1.0	13	6
17	15	M4	30	25 / 28 / 30	$20^{-0.005}_{-0.014}$	17	62	25	M20*P1.0	17	11
-	-	M5	35	28 / 30 / 32	$25^{-0.005}_{-0.014}$	22	75	18	M25*P1.5	20	15

• Supported side spec refer to P.30~P.31

Model No.	Parts no. ①③④⑥	
	Material	Surface Finish
GBK □□ - S □B	S50C	Black Dyed
GBK □□ - S □N		Ni-Plating

GBK-B

GBK10 ~ GBK40

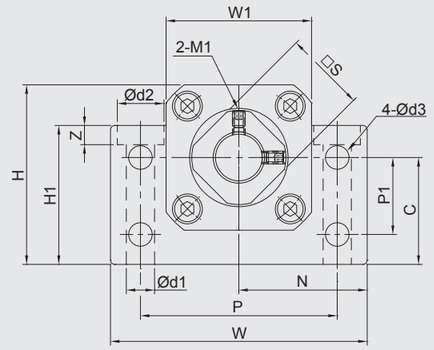

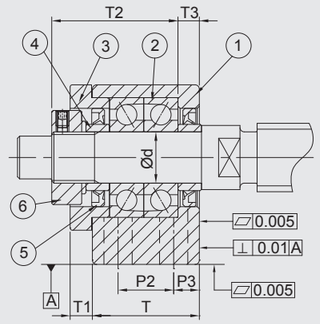

Specification

Standard Type			Dimensions														
Light pre-loaded	Medium pre-loaded	Hard pre-loaded	Ød	T	T1	T2	T3	W	W1	H	H1	N ±0.02	C	P	P1	P2	P3
GBK10-SL □	GBK10-SM □	GBK10-SH □	10	25	5	29.5	5	60	34	39	32.5	30	22 $^{0}_{-0.02}$	46	15	13	6
GBK12-SL □	GBK12-SM □	GBK12-SH □	12	25	5	29.5	5	60	34	42	32.5	30	25 $^{0}_{-0.02}$	46	18	13	6
GBK15-SL □	GBK15-SM □	GBK15-SH □	15	27	6	32	6	70	38	47	38	35	28 $^{0}_{-0.02}$	54	18	15	6
GBK17-SL □	GBK17-SM □	GBK17-SH □	17	35	9	44	7	86	48	63	55	43	39 $^{0}_{-0.02}$	68	28	19	8
GBK20-SL □	GBK20-SM □	GBK20-SH □	20	35	8	43	8	88	50	59	50	44	34 $^{0}_{-0.02}$	70	22	19	8
GBK25-SL □	GBK25-SM □	GBK25-SH □	25	42	12	54	9	106	62	79	70	53	48 $^{0}_{-0.02}$	85	33	22	10
GBK30-SL □	GBK30-SM □	GBK30-SH □	30	45	14	61	9	128	74	88	78	64	51 $^{0}_{-0.02}$	102	33	23	11
GBK35-SL □	GBK35-SM □	GBK35-SH □	35	50	14	67	12	140	86	95	79	70	52 $^{0}_{-0.02}$	114	35	26	12
GBK40-SL □	GBK40-SM □	GBK40-SH □	40	61	18	76	15	160	98	109	90	80	60 $^{0}_{-0.02}$	130	37	33	14

Ordering Example	GBK	-	10	-	SL	-	N	-	J
	Model No.		Shaft Dia.		Grade/Pre-loaded		Surface finish		Bearing category

GBK-N

Components

No.	Parts	Material	Q´ty
①	Main housing	S50C	1
②	Bearing	SUJ2	1 pair
③	Cover	S50C	1
④	Space ring	S50C	2
⑤	Seal (<Ø8 one seal only)	NBR	2
⑥	Lucknut	S50C	1

- ①②③ are in one unit. No disassemble for accuracy concern.
- Bearing filled with proper lithium soap lubricant and sealed.

Recommended processing dimensions of shaft

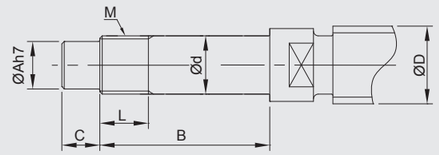

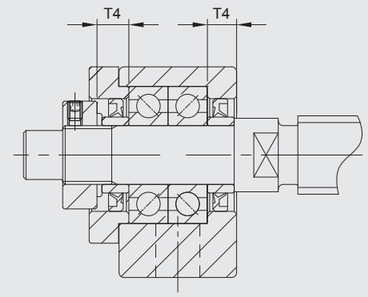

Unit：mm

						Recommended processing dimensions of shaft							
						Ball Screw Shaft O. D.	Shaft End Diameter	Processing sizes of shaft			Nominal thread		Space ring length
Ød1	Ød2	Z	Ød3	M1	□S	ØD	Ød	ØA	B	C	M	L	T4
6.3	10.5	6.5	5.5	M3	16	12 / 14 / 15	10 $^{-0.005}_{-0.012}$	8	36	15	M10*P1.0	16	5.5
6.3	10.5	1.5	5.5	M3	19	14 / 15 / 16	12 $^{-0.005}_{-0.012}$	10	36	15	M12*P1.0	14	5.5
6.3	10.5	6.5	5.5	M3	22	18 / 20	15 $^{-0.005}_{-0.014}$	12	40	20	M15*P1.0	12	6
8.7	14	8.6	6.6	M4	24	20 / 25	17 $^{-0.005}_{-0.014}$	15	53	23	M17*P1.0	17	7
8.7	14	8.5	6.6	M4	30	25 / 28	20 $^{-0.005}_{-0.014}$	17	53	25	M20*P1.0	15	8
10.7	17.5	10.8	9	M5	35	32 / 36	25 $^{-0.005}_{-0.014}$	20	65	30	M25*P1.5	18	9
13.7	20	13	11	M6	40	36 / 40	30 $^{-0.005}_{-0.015}$	25	72	38	M30*P1.5	25	9
13.7	20	13	11	M8	50	45	35 $^{-0.005}_{-0.015}$	30	81	45	M35*P1.5	28	12
17.7	26	17.5	14	M8	50	50	40 $^{-0.005}_{-0.015}$	35	93	50	M40*P1.5	35	15

• Supported side spec refer to P.32~P.33

Model No.	Parts no. ①③④⑥	
	Material	Surface Finish
GEK □□ - S □B	S50C	Black Dyed
GEK □□ - S □N		Ni-Plating

GEK-B

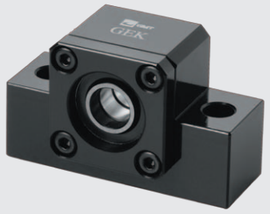

GEK06 ~ GEK20

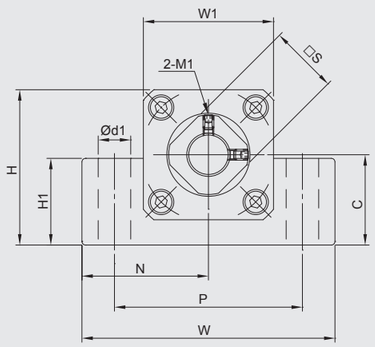

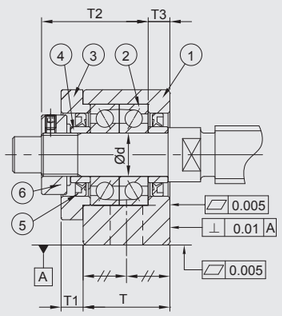

Specification

Standard Type			Dimensions											
Light pre-loaded	Medium pre-loaded	Hard pre-loaded	Ød	T	T1	T2	T3	W	W1	H	H1	N ±0.02	C	P
GEK06-SL □	GEK06-SM □	GEK06-SH □	6	20	5.5	22	3.5	42	20	25	12	21	$13^{0}_{-0.02}$	30
GEK08-SL □	GEK08-SM □	GEK08-SH □	8	23	7	26	4	52	27	32	16	26	$17^{0}_{-0.02}$	38
GEK10-SL □	GEK10-SM □	GEK10-SH □	10	24	6	29.5	6	70	36	43	24	35	$25^{0}_{-0.02}$	52
GEK12-SL □	GEK12-SM □	GEK12-SH □	12	24	6	29.5	6	70	36	43	24	35	$25^{0}_{-0.02}$	52
GEK15-SL □	GEK15-SM □	GEK15-SH □	15	25	6	32	5	80	40	50	25	40	$30^{0}_{-0.02}$	60
GEK20-SL □	GEK20-SM □	GEK20-SH □	20	42	10	50	10	95	56	58	25	47.5	$30^{0}_{-0.02}$	75

Ordering Example	GEK	-	10	-	SL	-	N	-	J
	Model No.		Shaft Dia.		Grade/Pre-loaded		Surface finish		Bearing category

GEK-N

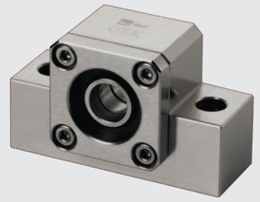

Components

No.	Parts	Material	Q´ty
①	Main housing	S50C	1
②	Bearing	SUJ2	1 pair
③	Cover	S50C	1
④	Space ring	S50C	2
⑤	Seal (<Ø8 one seal only)	NBR	2
⑥	Lucknut	S50C	1

- ①②③ are in one unit. No disassemble for accuracy concern.
- Bearing filled with proper lithium soap lubricant and sealed.

Recommended processing dimensions of shaft

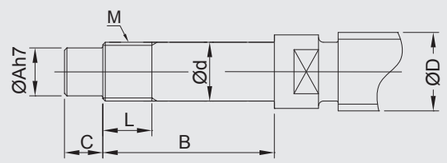

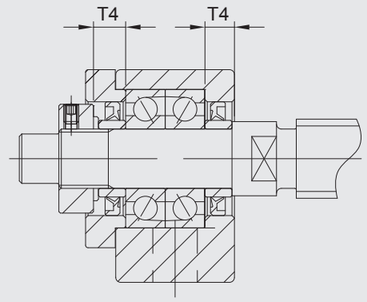

Unit：mm

			Recommended processing dimensions of shaft							
			Ball Screw Shaft O. D.	Shaft End Diameter	Processing sizes of shaft			Nominal thread		Space ring length
Ød1	M1	□S	ØD	Ød	ØA	B	C	M	L	T4
5.2	M3	12	5	$6^{-0.005}_{-0.012}$	4	28	8	M6*P0.75	8	5
6.3	M3	14	10 / 12	$8^{-0.005}_{-0.012}$	6	32	9	M8*P1.0	10	5.5
9	M3	16	12 / 14 / 15	$10^{-0.005}_{-0.012}$	8	36	15	M10*P1.0	11	5.5
9	M3	19	14 / 15 / 16	$12^{-0.005}_{-0.012}$	10	36	15	M12*P1.0	11	5.5
11	M3	22	18 / 20	$15^{-0.005}_{-0.014}$	12	47	20	M15*P1.0	13	6
11	M4	30	25 / 28 / 30	$20^{-0.005}_{-0.014}$	17	62	25	M20*P1.0	17	11

• Supported side spec refer to P.34~P.35

Model No.	Parts no. ①③④⑥	
	Material	Surface Finish
GFK □□ - S □B	S50C	Black Dyed
GFK □□ - S □N		Ni-Plating

GFK-B

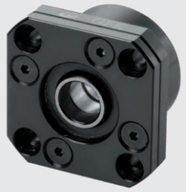

GFK06 ~ GFK08

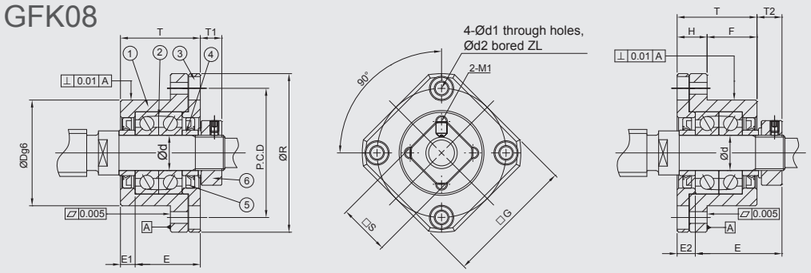

GFK10 ~ GFK30

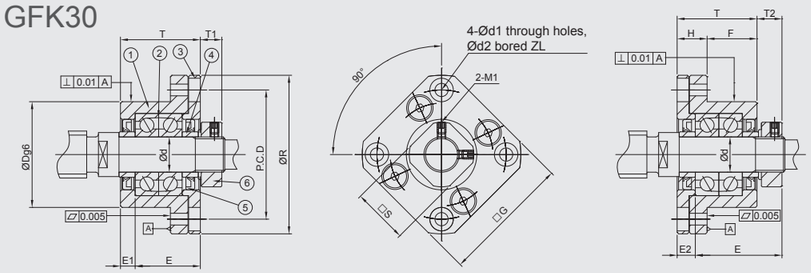

Specification

Standard Type			Dimensions													
Light pre-loaded	Medium pre-loaded	Hard pre-loaded	Ød	ØR	□G	T	H	F	ØDg6	E	Installation (A)		Installation (B)		PCD
											T1	E1	T2	E2	
GFK06-SL □	GFK06-SM □	GFK06-SH □	6	36	28	20	7	13	$22^{-0.007}_{-0.020}$	22	5.5	3.5	6.5	4.5	28
GFK08-SL □	GFK08-SM □	GFK08-SH □	8	43	35	23	9	14	$28^{-0.007}_{-0.020}$	26	7	4	8	5	35
GFK10-SL □	GFK10-SM □	GFK10-SH □	10	52	42	27	10	17	$34^{-0.009}_{-0.025}$	29.5	7.3	5	8.5	6	42
GFK12-SL □	GFK12-SM □	GFK12-SH □	12	54	44	27	10	17	$36^{-0.009}_{-0.025}$	29.5	7.3	5	8.5	6	44
GFK15-SL □	GFK15-SM □	GFK15-SH □	15	63	52	32	15	17	$40^{-0.009}_{-0.025}$	36	9.8	6	12	8	50
GFK17-SL □	GFK17-SM □	GFK17-SH □	17	77	61	45	22	23	$50^{-0.009}_{-0.025}$	47	11	9	14	12	62
GFK20-SL □	GFK20-SM □	GFK20-SH □	20	85	68	52	22	30	$57^{-0.010}_{-0.029}$	50	7.8	10	12	14	70
GFK25-SL □	GFK25-SM □	GFK25-SH □	25	98	79	57	27	30	$63^{-0.010}_{-0.029}$	60	12.8	10	20	17	80
GFK30-SL □	GFK30-SM □	GFK30-SH □	30	117	93	62	30	32	$75^{-0.010}_{-0.029}$	61	10.8	12	17	18	95

Ordering Example	GFK	-	10	-	SL	-	N	-	J
	Model No.		Shaft Dia.		Grade/Pre-loaded		Surface finish		Bearing category

GFK-N

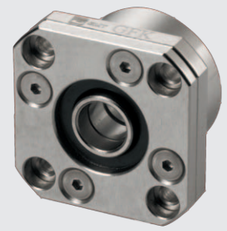

Components

No.	Parts	Material	Q´ty
①	Main housing	S50C	1
②	Bearing	SUJ2	1 pair
③	Cover	S50C	1
④	Space ring	S50C	2
⑤	Seal (<Ø8 one seal only)	NBR	2
⑥	Lucknut	S50C	1

- ①②③ are in one unit. No disassemble for accuracy concern.
- Bearing filled with proper lithium soap lubricant and sealed.

Recommended processing dimensions of shaft

Installation(A)

Installation(B)

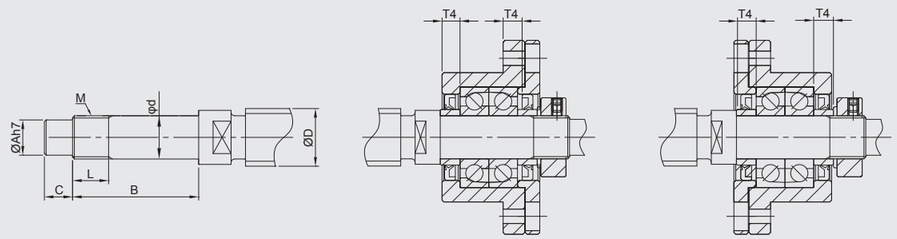

Unit：mm

					Recommended processing dimensions of shaft							
					Ball Screw Shaft O. D.	Shaft End Diameter	Processing sizes of shaft			Nominal thread		Space ring length
Ød1	Ød2	Z	M1	□S	ØD	Ød	ØA	B	C	M	L	T4
3.4	6	3.3	M3	12	8	$6^{-0.005}_{-0.012}$	4	28	8	M6*P0.75	8	5
3.4	6	3.3	M3	14	10 / 12	$8^{-0.005}_{-0.012}$	6	32	9	M8*P1.0	10	5.5
4.5	8	4	M3	16	12 / 14 / 15	$10^{-0.005}_{-0.012}$	8	36	15	M10*P1.0	11	5.5
4.5	8	4	M3	19	14 / 15 / 16	$12^{-0.005}_{-0.012}$	10	36	15	M12*P1.0	11	5.5
5.5	9.5	6	M3	22	18 / 20	$15^{-0.005}_{-0.014}$	12	47	20	M15*P1.0	13	10
6.6	11	10	M4	24	20 / 25	$17^{-0.005}_{-0.014}$	15	53	23	M17*P1.0	17	7
6.5	11	10	M4	30	25 / 28 / 30	$20^{-0.005}_{-0.014}$	17	62	25	M20*P1.0	17	11
9	15	13	M5	35	30 / 32 / 36	$25^{-0.005}_{-0.014}$	20	76	30	M25*P1.5	20	15
11	17.5	15	M6	40	36 / 40	$30^{-0.005}_{-0.015}$	25	72	38	M30*P1.5	25	9

• Supported side spec refer to P.36~P.37

Model No.	Parts no. ①③④⑥	
	Material	Surface Finish
GAK □□-E□B	S50C	Black Dyed
GAK □□-E□N		Ni-Plating

GAK10 ~ GAK15

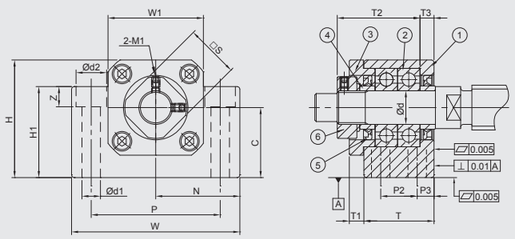

GAK06 ~ GAK08

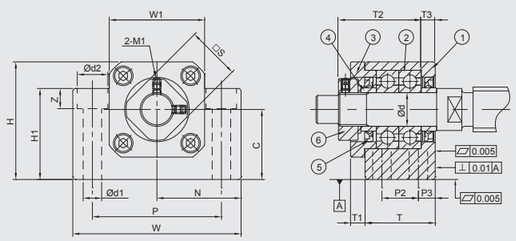

GAK20

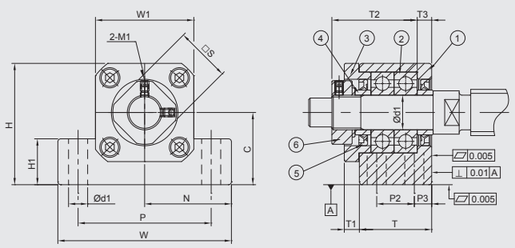

Specification

Economic Type		Dimensions															
High Rigidity	Universal	Ød	T	T1	T2	T3	W	W1	H	H1	N ±0.02	C	P	P2	P3	Ød1	Ød2
GAK06-ER □	GAK06-EG □	6	20	5.5	22	3.5	42	18	25	20	21	$13^{0}_{-0.04}$	30	-	-	5.5	9.5
GAK08-ER □	GAK08-EG □	8	23	7	26	4	52	25	32	26	26	$17^{0}_{-0.04}$	38	-	-	6	11
GAK10-ER □	GAK10-EG □	10	24	6	29.5	6	70	36	43	35	35	$25^{0}_{-0.04}$	52	-	-	8.7	14
GAK12-ER □	GAK12-EG □	12	24	6	29.5	6	70	36	43	35	35	$25^{0}_{-0.04}$	52	-	-	8.7	14
GAK15-ER □	GAK15-EG □	15	25	6	32	5	80	40	50	40	40	$30^{0}_{-0.04}$	60	-	-	10.7	17
GAK20-ER □	GAK20-EG □	20	42	10	50	10	95	56	58	45	47.5	$30^{0}_{-0.04}$	75	22	10	10.7	17

Ordering Example	GAK	-	10	-	ER	-	N	-	J
	Model No.		Shaft Dia.		Grade		Surface finish		Bearing category

GAK-B

GAK-N

Components

No.	Parts	Material	Q´ty
①	Main housing	S50C	1
②	Bearing	SUJ2	1 pair
③	Cover	S50C	1
④	Space ring	S50C	2
⑤	Seal (<Ø8 one seal only)	NBR	2
⑥	Lucknut	S50C	1

- ①②③ are in one unit. No disassemble for accuracy concern.
- Bearing filled with proper lithium soap lubricant and sealed.

Recommended processing dimensions of shaft

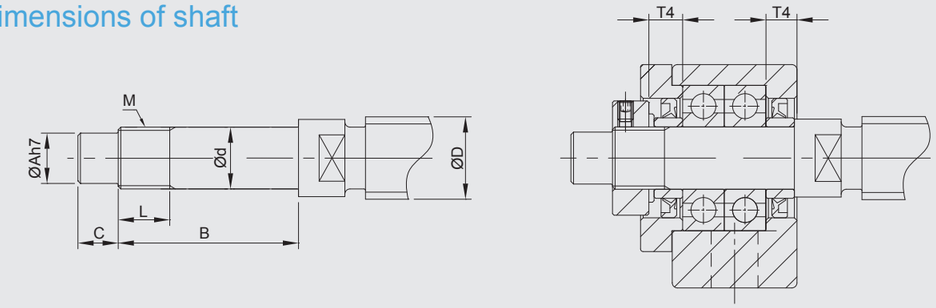

Unit：mm

			Recommended processing dimensions of shaft							
			Ball Screw Shaft O. D.	Shaft End Diameter	Processing sizes of shaft			Nominal thread		Space ring length
Z	M1	□S	ØD	Ød	ØA	B	C	M	L	T4
7	M3	12	8 / 10	$6^{-0.005}_{-0.012}$	5	27	8	M6*P0.75	6	5
12	M3	14	10 / 12	$8^{-0.005}_{-0.012}$	6.5	31.5	7.5	M8*P1.0	7	5.5
11	M3	16	12 / 14 / 15	$10^{-0.005}_{-0.012}$	8	36	15	M10*P1.0	11	5.5
11	M3	19	14 / 15 / 16	$12^{-0.005}_{-0.012}$	10	36	15	M12*P1.0	11	5.5
15	M3	22	18 / 20	$15^{-0.005}_{-0.014}$	12	47	20	M15*P1.0	13	6
15	M4	30	25 / 28 / 30	$20^{-0.005}_{-0.014}$	17	62	25	M20*P1.0	17	11

• Supported side spec refer to P.30~P.31

Model No.	Parts no. ①③④⑥	
	Material	Surface Finish
GBK □□ - E □B	S50C	Black Dyed
GBK □□ - E □N		Ni-Plating

GBK-B

GBK10 ~ GBK20

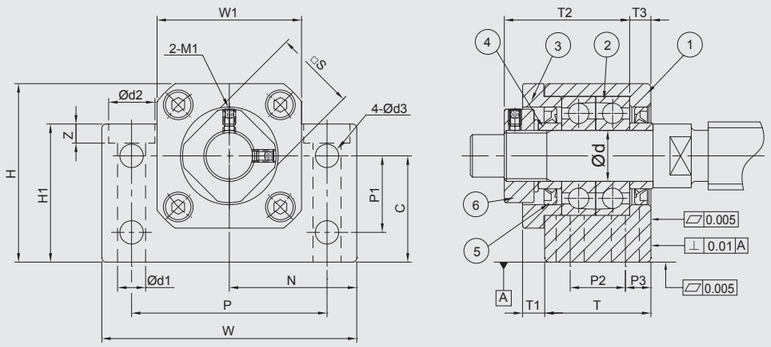

Specification

Economic Type		Dimensions															
High Rigidity	Universal	Ød	T	T1	T2	T3	W	W1	H	H1	N ±0.02	C	P	P1	P2	P3	Ød1
GBK10-ER □	GBK10-EG □	10	25	5	29.5	5	60	34	39	32.5	30	$22^{0}_{-0.04}$	46	15	13	6	6.3
GBK12-ER □	GBK12-EG □	12	25	5	29.5	5	60	34	42	32.5	30	$25^{0}_{-0.04}$	46	18	13	6	6.3
GBK15-ER □	GBK15-EG □	15	27	6	32	6	70	38	47	38	35	$28^{0}_{-0.04}$	54	18	15	6	6.3
GBK17-ER □	GBK17-EG □	17	35	9	44	7	86	48	63	55	43	$39^{0}_{-0.04}$	68	28	19	8	8.7
GBK20-ER □	GBK20-EG □	20	35	8	43	8	88	50	59	50	44	$34^{0}_{-0.04}$	70	22	19	8	8.7

Ordering Example	GBK	-	10	-	ER	-	N	-	J
	Model No.		Shaft Dia.		Grade		Surface finish		Bearing category

GBK-N

Components

No.	Parts	Material	Q´ty
①	Main housing	S50C	1
②	Bearing	SUJ2	1 pair
③	Cover	S50C	1
④	Space ring	S50C	2
⑤	Seal (<Ø8 one seal only)	NBR	2
⑥	Lucknut	S50C	1

- ①②③ are in one unit. No disassemble for accuracy concern.
- Bearing filled with proper lithium soap lubricant and sealed.

Recommended processing dimensions of shaft

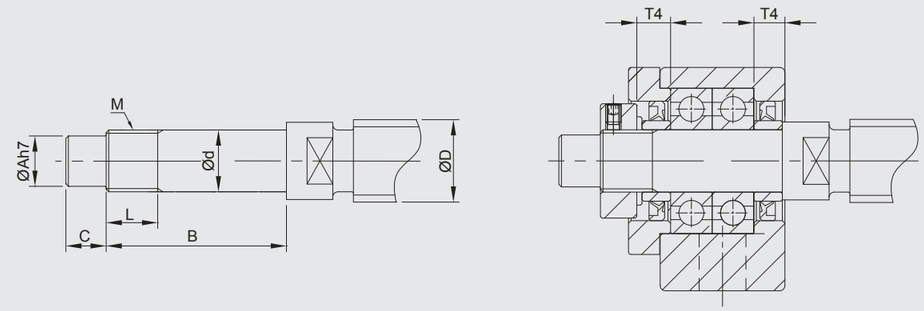

Unit：mm

					Recommended processing dimensions of shaft							
					Ball Screw Shaft O. D.	Shaft End Diameter	Processing sizes of shaft			Nominal thread		Space ring length
Ød2	Z	Ød3	M1	□S	ØD	Ød	ØA	B	C	M	L	T4
10.5	6.5	5.5	M3	16	12 / 14 / 15	$10^{-0.005}_{-0.012}$	8	36	15	M10*P1.0	16	5.5
10.5	1.5	5.5	M3	19	14 / 15 / 16	$12^{-0.005}_{-0.012}$	10	36	15	M12*P1.0	14	5.5
10.5	6.5	5.5	M3	22	18 / 20	$15^{-0.005}_{-0.014}$	12	40	20	M15*P1.0	12	6
14	8.6	6.6	M4	24	20 / 25	$17^{-0.005}_{-0.014}$	15	53	23	M17*P1.0	17	7
14	8.5	6.6	M4	30	25 / 28	$20^{-0.005}_{-0.014}$	17	53	25	M20*P1.0	15	8

• Supported side spec refer to P.32~P.33

Model No.	Parts no. ①③④⑥	
	Material	Surface Finish
GEK □□ - E □B	S50C	Black Dyed
GEK □□ - E □N		Ni-Plating

GEK-B

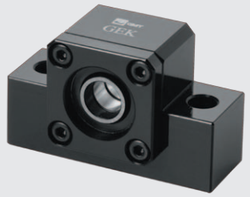

GEK06 ~ GEK20

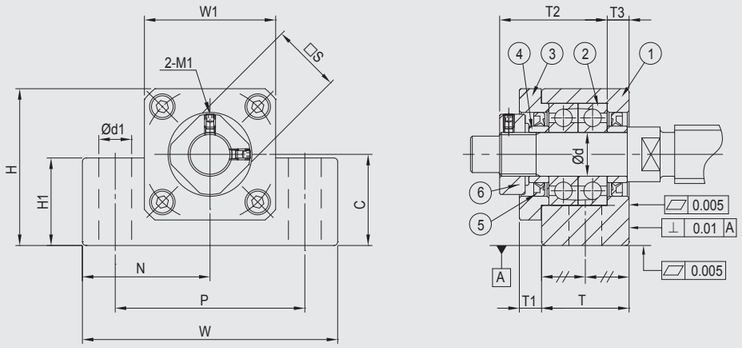

Specification

Economic Type		Dimensions												
High Rigidity	Universal	Ød	T	T1	T2	T3	W	W1	H	H1	N ±0.02	C	P	Ød1
GEK06-ER □	GEK06-EG □	6	20	5.5	22	3.5	42	20	25	12	21	$13^{0}_{-0.04}$	30	5.2
GEK08-ER □	GEK08-EG □	8	23	7	26	4	52	27	32	16	26	$17^{0}_{-0.04}$	38	6.3
GEK10-ER □	GEK10-EG □	10	24	6	29.5	6	70	36	43	24	35	$25^{0}_{-0.04}$	52	9
GEK12-ER □	GEK12-EG □	12	24	6	29.5	6	70	36	43	24	35	$25^{0}_{-0.04}$	52	9
GEK15-ER □	GEK15-EG □	15	25	6	32	5	80	40	50	25	40	$30^{0}_{-0.04}$	60	11
GEK20-ER □	GEK20-EG □	20	42	10	50	10	95	56	58	25	47.5	$30^{0}_{-0.04}$	75	11

Ordering Example	GEK	-	10	-	ER	-	N	-	J
	Model No.		Shaft Dia.		Grade		Surface finish		Bearing category

GEK-N

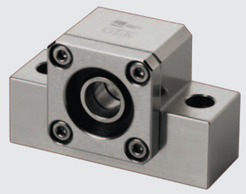

Components

No.	Parts	Material	Q´ty
①	Main housing	S50C	1
②	Bearing	SUJ2	1 pair
③	Cover	S50C	1
④	Space ring	S50C	2
⑤	Seal (<Ø8 one seal only)	NBR	2
⑥	Lucknut	S50C	1

- ①②③ are in one unit. No disassemble for accuracy concern.
- Bearing filled with proper lithium soap lubricant and sealed.

Recommended processing dimensions of shaft

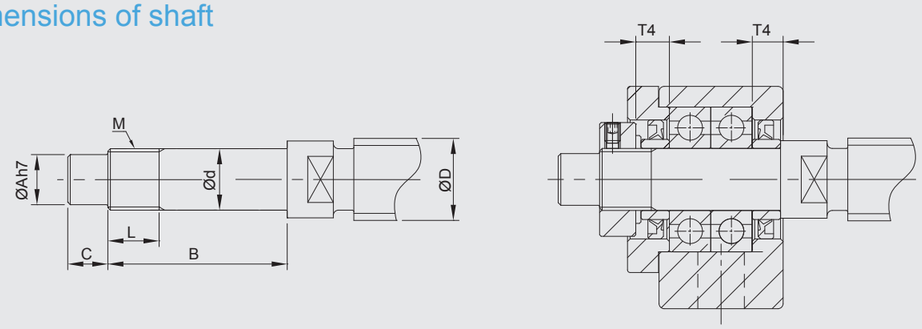

Unit：mm

		Recommended processing dimensions of shaft							
		Ball Screw Shaft O. D.	Shaft End Diameter	Processing sizes of shaft			Nominal thread		Space ring length
M1	□S	ØD	Ød	ØA	B	C	M	L	T4
M3	12	8	$6^{-0.005}_{-0.012}$	4	28	8	M6*P0.75	8	5
M3	14	10 / 12	$8^{-0.005}_{-0.012}$	6	32	9	M8*P1.0	10	5.5
M3	16	12 / 14 / 15	$10^{-0.005}_{-0.012}$	8	36	15	M10*P1.0	11	5.5
M3	19	14 / 15 / 16	$12^{-0.005}_{-0.012}$	10	36	15	M12*P1.0	11	5.5
M3	22	18 / 20	$15^{-0.005}_{-0.014}$	12	47	20	M15*P1.0	13	6
M4	30	25 / 28 / 30	$20^{-0.005}_{-0.014}$	17	62	25	M20*P1.0	17	11

• Supported side spec refer to P.34~P.35

Model No.	Parts no. ①③④⑥	
	Material	Surface Finish
GFK □□ - E □B	S50C	Black Dyed
GFK □□ - E □N		Ni-Plating

GFK06 ~ GFK08

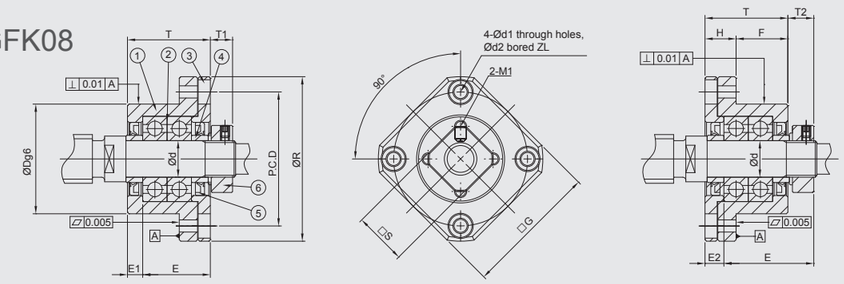

GFK10 ~ GFK30

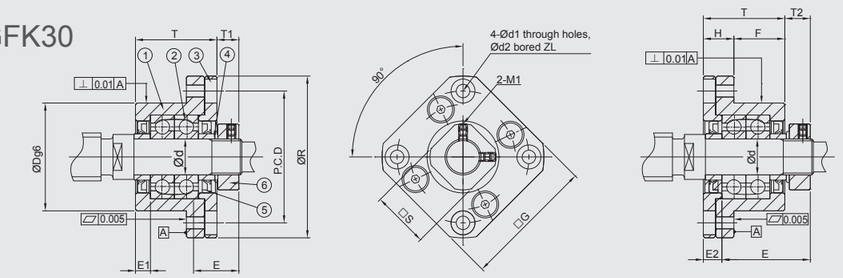

Specification

Economic Type		Dimensions													
High Rigidity	Universal	Ød	ØR	□G	T	H	F	ØDg6	E	Installation (A)		Installation (B)		PCD	Ød1
										T1	E1	T2	E2		
GFK06-ER □	GFK06-EG □	6	36	28	20	7	13	22 $^{-0.007}_{-0.020}$	22	5.5	3.5	6.5	4.5	28	3.4
GFK08-ER □	GFK08-EG □	8	43	35	23	9	14	28 $^{-0.007}_{-0.020}$	26	7	4	8	5	35	3.4
GFK10-ER □	GFK10-EG □	10	52	42	27	10	17	34 $^{-0.009}_{-0.025}$	29.5	7.3	5	8.5	6	42	4.5
GFK12-ER □	GFK12-EG □	12	54	44	27	10	17	36 $^{-0.009}_{-0.025}$	29.5	7.3	5	8.5	6	44	4.5
GFK15-ER □	GFK15-EG □	15	63	52	32	15	17	40 $^{-0.009}_{-0.025}$	36	9.8	6	12	8	50	5.5
GFK17-ER □	GFK17-EG □	17	77	61	45	22	23	50 $^{-0.009}_{-0.025}$	47	11	9	14	12	62	6.6
GFK20-ER □	GFK20-EG □	20	85	68	52	22	30	57 $^{-0.010}_{-0.029}$	50	7.8	10	12	14	70	6.6
GFK25-ER □	GFK25-EG □	25	98	79	57	27	30	63 $^{-0.009}_{-0.025}$	59	13	10	20	17	80	9
GFK30-ER □	GFK30-EG □	30	117	93	62	30	32	75 $^{-0.010}_{-0.029}$	61	11	12	17	18	95	11

Ordering Example	GFK	-	10	-	ER	-	N	-	J
	Model No.		Shaft Dia.		Grade		Surface finish		Bearing category

GFK-B

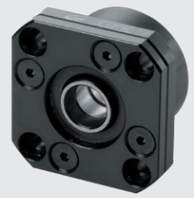

GFK-N

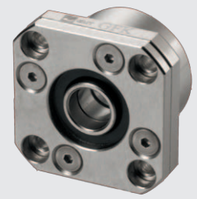

Components

No.	Parts	Material	Q´ty
①	Main housing	S50C	1
②	Bearing	SUJ2	1 pair
③	Cover	S50C	1
④	Space ring	S50C	2
⑤	Seal (<Ø8 one seal only)	NBR	2
⑥	Lucknut	S50C	1

- ①②③ are in one unit. No disassemble for accuracy concern.
- Bearing filled with proper lithium soap lubricant and sealed.

Recommended processing dimensions of shaft

Installation(A)

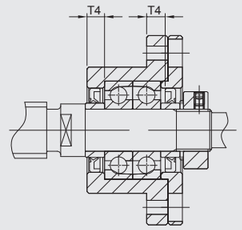

Installation(B)

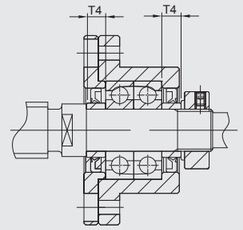

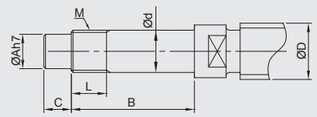

Unit：mm

				Recommended processing dimensions of shaft							
				Ball Screw Shaft O. D.	Shaft End Diameter	Processing sizes of shaft			Nominal thread		Space ring length
Ød2	Z	M1	□S	ØD	Ød	ØA	B	C	M	L	T4
6	3.3	M3	12	8	6 $^{-0.005}_{-0.012}$	4	28	8	M6*P0.75	8	5
6	3.3	M3	14	10 / 12	8 $^{-0.005}_{-0.012}$	6	32	9	M8*P1.0	10	5.5
8	4	M3	16	12 / 14 / 15	10 $^{-0.005}_{-0.012}$	8	36	15	M10*P1.0	11	5.5
8	4	M3	19	14 / 15 / 16	12 $^{-0.005}_{-0.012}$	10	36	15	M12*P1.0	11	5.5
9.5	6	M3	22	18 / 20	15 $^{-0.005}_{-0.014}$	12	47	20	M15*P1.0	13	10
11	10	M4	24	20 / 25	17 $^{-0.005}_{-0.014}$	15	53	23	M17*P1.0	17	7
11	10	M4	30	25 / 28 / 30	20 $^{-0.005}_{-0.014}$	17	62	25	M20*P1.0	17	11
15	13	M5	35	28 / 30 / 32	25 $^{-0.005}_{-0.014}$	22	75	18	M25*P1.5	20	15
17.5	15	M6	40	36 / 40	30 $^{-0.005}_{-0.015}$	25	72	38	M30*P1.5	25	9

• Supported side spec refer to P.36~P.37

Model No.	Parts no. ①	
	Material	Surface Finish
GAF □□ - SB	S50C	Black Dyed
GAF □□ - SN		Ni-Plating

GAF06 ~ GAF20

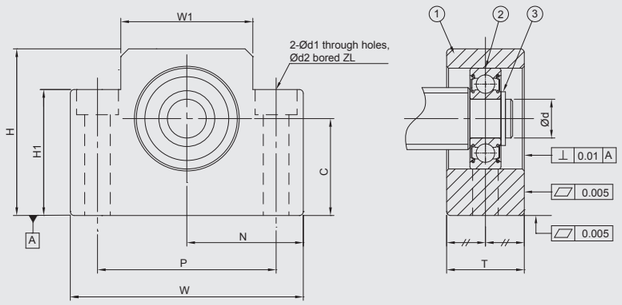

GAF25

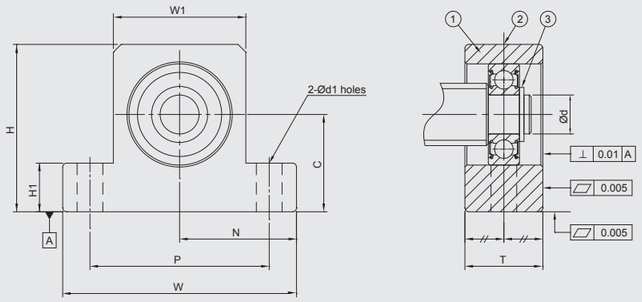

Specification

Standard Type	Dimensions									
	Ød	T	W	W1	H	H1	P	Ød1	Ød2	Z
GAF06-S □	6	12	42	18	25	20	30	5.2	9.5	7
GAF08-S □	6	15	52	25	32	26	38	6.3	11	12
GAF10-S □	8	20	70	36	43	35	52	8.7	14	11
GAF12-S □	10	20	70	36	43	35	52	8.7	14	11
GAF15-S □	15	20	80	41	50	40	60	8.7	14	11
GAF20-S □	20	26	95	56	58	45	75	10.7	17	15
GAF25-S □	25	30	105	66	68	25	85	11	-	-

Ordering Example	GAF	-	10	-	S	-	N	-	J
	Model No.		Shaft Dia.		Grade		Surface finish		Bearing category

GAF-B

GAF-N

Components

No.	Parts	Material	Q´ty
①	Main housing	S50C	1
②	Bearing	SUJ2	1
③	Snap ring	SWB	1

- Bearing filled with proper lithium soap lubricant maintenance free.
- Bearing with two steel covers in black dyed.
- Bearing with two touch-type plistic covers in Ni-plating.

Recommended processing dimensions of shaft

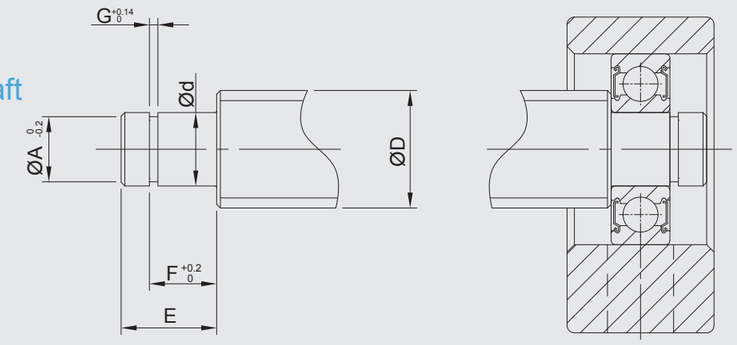

Unit：mm

		Recommended processing dimensions of shaft						Snap ring
		Ball Screw Shaft O. D.	Shaft End Diameter	Groove sizes machined for snap ring				
N ±0.02	C	ØD	Ød	ØA	E	F	G	
21	13 0 -0.04	8	6 -0.005 -0.012	6	9	6.7	0.8	S 06
26	17 0 -0.04	8 / 10	6 -0.005 -0.012	6	9	6.7	0.8	S 06
35	25 0 -0.04	12 / 14 / 15	8 -0.005 -0.012	7.6	10	7.9	0.9	S 08
35	25 0 -0.02	14 / 15 / 16	10 -0.005 -0.012	9.6	11	9.15	1.15	S 10
40	30 0 -0.02	18 / 20	15 -0.005 -0.014	14.3	13	10.15	1.15	S 15
47.5	30 0 -0.02	25 / 28 / 30	20 -0.005 -0.014	19	19	15.35	1.35	S 20
52.5	35 0 -0.02	28 / 30 / 32	25 -0.005 -0.014	25	21	16.35	1.35	S 25

• Fixed Side spec please refer to P.14~15 and P.22~23

Model No.	Parts no. ①	
	Material	Surface Finish
GBF □□ - SB	S50C	Black Dyed
GBF □□ - SN		Ni-Plating

GBF-B

GBF10 ~ GBF40

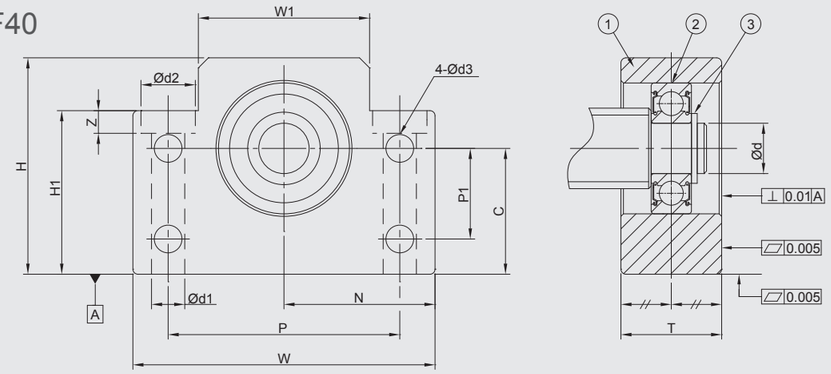

Specification

Standard Type	Dimensions											
	Ød	T	W	W1	H	H1	P	P1	Ød1	Ød2	Z	Ød3
GBF10-S □	8	20	60	34	39	32.5	46	15	6.3	10.8	5	5.5
GBF12-S □	10	20	60	34	43	32.5	46	18	6.3	10.8	1.5	5.5
GBF15-S □	15	20	70	40	48	38	54	18	6.3	11	6.5	5.5
GBF17-S □	17	23	86	50	64	55	68	28	8.7	14	8.6	6.6
GBF20-S □	20	26	88	52	60	50	70	22	8.7	14	8.6	6.6
GBF25-S □	25	30	106	64	80	70	85	33	10.7	17.5	11	9
GBF30-S □	30	32	128	76	89	78	102	33	13.7	20	13	11
GBF35-S □	35	32	140	88	96	79	114	35	13.7	20	13	11
GBF40-S □	40	37	160	100	110	90	130	37	17.7	26	17.5	14

Ordering Example	GBF	-	10	-	S	-	N	-	J
	Model No.		Shaft Dia.		Grade		Surface finish		Bearing category

GBF-N

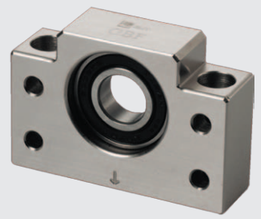

Components

No.	Parts	Material	Q´ty
①	Main housing	S50C	1
②	Bearing	SUJ2	1
③	Snap ring	SWB	1

- Bearing filled with proper lithium soap lubricant maintenance free.
- Bearing with two steel covers in black dyed.
- Bearing with two touch-type plistic covers in Ni-plating.

Recommended processing dimensions of shaft

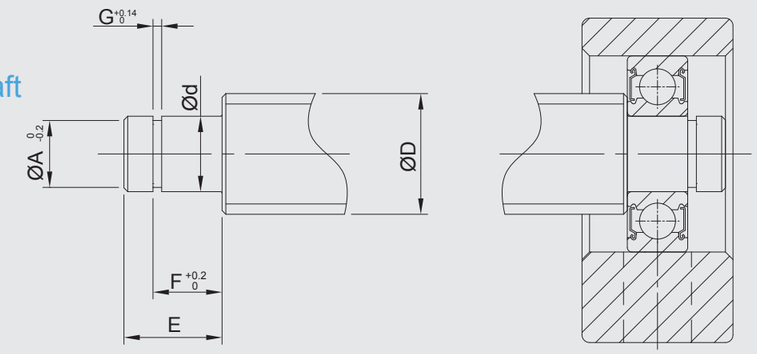

Unit：mm

		Recommended processing dimensions of shaft						Snap ring
		Ball Screw Shaft O. D.	Shaft End Diameter	Groove sizes machined for snap ring				
N ±0.02	C	ØD	Ød	ØA	E	F	G	
30	22 0 -0.04	12 / 14 / 15	8 -0.005 -0.012	7.6	10	7.9	0.9	S 08
30	25 0 -0.02	14 / 15 / 16	10 -0.005 -0.012	9.6	11	9.15	1.15	S 10
35	28 0 -0.02	18 / 20	15 -0.005 -0.014	14.3	13	10.15	1.15	S 15
43	39 0 -0.02	20 / 25	17 -0.005 -0.014	16.2	16	13.15	1.15	S 17
44	34 0 -0.02	25 / 28 / 30	20 -0.005 -0.014	19	19	15.35	1.35	S 20
53	48 0 -0.02	30 / 32 / 36	25 -0.005 -0.014	23.9	20	16.35	1.35	S 25
64	51 0 -0.02	36 / 40	30 -0.005 -0.015	28.6	21	17.75	1.75	S 30
70	52 0 -0.02	40 / 45	35 -0.005 -0.015	33	22	18.75	1.75	S 35
80	60 0 -0.02	50	40 -0.005 -0.015	38	23	19.95	1.95	S 40

• Fixed Side spec please refer to P.16~P.17 and P.24~P.25

Model No.	Parts no. ①	
	Material	Surface Finish
GEF □□ - SB	S50C	Black Dyed
GEF □□ - SN		Ni-Plating

GEF-B

GEF06 ~ GEF20

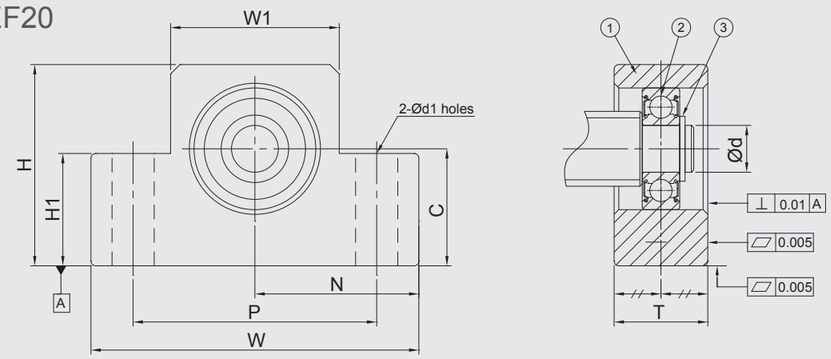

Specification

Standard Type	Dimensions							
	Ød	T	W	W1	H	H1	P	Ød1
GEF06-S □	6	12	42	20	25	12	30	5.2
GEF08-S □	6	14	52	27	32	16	38	6.3
GEF10-S □	8	20	70	36	43	24	52	9
GEF12-S □	10	20	70	36	43	24	52	9
GEF15-S □	15	20	80	41	49	25	60	9
GEF20-S □	20	26	95	56	58	25	75	11

Ordering Example	GEF	-	10	-	S	-	N	-	J
	Model No.		Shaft Dia.		Grade		Surface finish		Bearing category

GEF-N

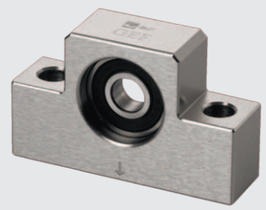

Components

No.	Parts	Material	Q´ty
①	Main housing	S50C	1
②	Bearing	SUJ2	1
③	Snap ring	SWB	1

- Bearing filled with proper lithium soap lubricant maintenance free.
- Bearing with two steel covers in black dyed.
- Bearing with two touch-type plistic covers in Ni-plating.

Recommended processing dimensions of shaft

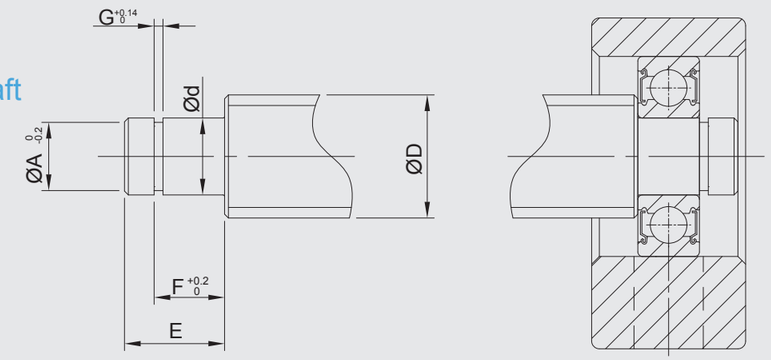

Unit：mm

		Recommended processing dimensions of shaft						Snap ring
		Ball Screw Shaft O. D.	Shaft End Diameter	Groove sizes machined for snap ring				
N ±0.02	C	ØD	Ød	ØA	E	F	G	
21	13 0 -0.04	8	6 -0.005 -0.012	5.7	9	6.8	0.8	S 06
26	17 0 -0.04	10	6 -0.005 -0.012	5.7	9	6.8	0.8	S 06
35	25 0 -0.04	12 / 14 / 15	8 -0.005 -0.012	7.6	10	7.9	0.9	S 08
35	25 0 -0.02	14 / 15 / 16	10 -0.005 -0.012	9.6	11	9.15	1.15	S 10
40	30 0 -0.02	18 / 20	15 -0.005 -0.014	14.3	13	10.15	1.15	S 15
47.5	30 0 -0.02	25 / 28 / 30	20 -0.005 -0.014	19	19	15.35	1.35	S 20

• Fixed Side spec please refer to P.18~P.19 and P.26~P.27

Model No.	Parts no. ①	
	Material	Surface Finish
GFF □□-□	S50C	Black Dyed
GFF □□-□		Ni-Plating

GFF-B

GFF06 ~ GFF30

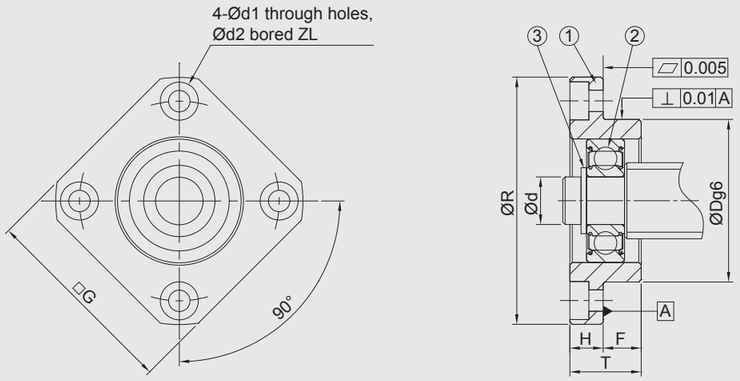

Specification

Standard Type	Dimensions									
	Ød	ØR	□G	T	H	F	ØDg6	PCD	Ød1	Ød2
GFF06-□	6	36	28	10	6	4	$22^{-0.007}_{-0.020}$	28	3.4	6
GFF10-□	8	43	35	12	7	5	$28^{-0.007}_{-0.020}$	35	3.4	6
GFF12-□	10	52	42	15	7	8	$34^{-0.009}_{-0.025}$	42	4.2	8
GFF15-□	15	63	52	17	9	8	$40^{-0.009}_{-0.025}$	50	5.2	9.5
GFF17-□	17	77	61	20	11	9	$50^{-0.009}_{-0.025}$	62	6.6	11
GFF20-□	20	85	68	20	11	9	$57^{-0.010}_{-0.029}$	70	6.3	11
GFF25-□	25	98	79	24	14	10	$63^{-0.010}_{-0.029}$	80	8.7	14
GFF30-□	30	117	93	27	18	9	$75^{-0.010}_{-0.029}$	95	10.7	17.5

Ordering Example	GFF	-	10	-	N	-	J
	Model No.		Shaft Dia.		Surface finish		Bearing category

GFF-N

Components

No.	Parts	Material	Q´ty
①	Main housing	S50C	1
②	Bearing	SUJ2	1
③	Snap ring	SWB	1

- Bearing filled with proper lithium soap lubricant maintenance free.
- Bearing with two steel covers in black dyed.
- Bearing with two touch-type plistic covers in Ni-plating.

Recommended processing dimensions of shaft

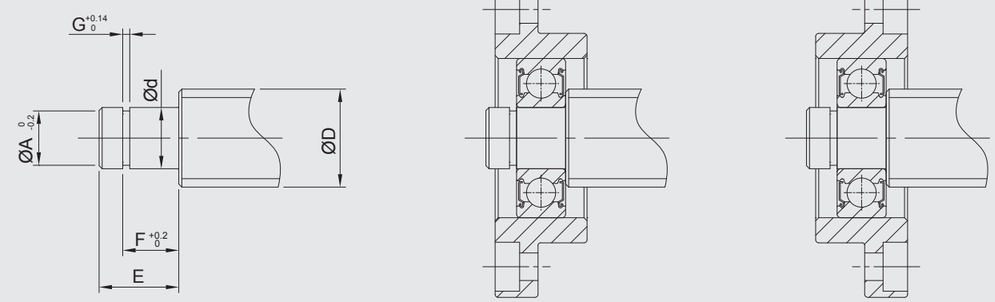

Unit：mm

	Recommended processing dimensions of shaft						Snap ring
	Ball Screw Shaft O. D.	Shaft End Diameter	Groove sizes machined for snap ring				
Z	ØD	Ød	ØA	E	F	G	
3.3	8	$6^{-0.005}_{-0.012}$	5.7	9	6.8	0.8	S 06
3.3	12 / 14 / 15	$8^{-0.005}_{-0.012}$	7.6	10	7.9	0.9	S 08
4.4	14 / 15 / 16	$10^{-0.005}_{-0.012}$	9.6	11	9.15	1.15	S 10
5.4	18 / 20	$15^{-0.005}_{-0.014}$	14.3	13	10.15	1.15	S 15
8.6	20 / 25	$17^{-0.005}_{-0.014}$	16.2	16	13.15	1.15	S 17
6.5	25 / 28 / 30	$20^{-0.005}_{-0.014}$	19	19	15.35	1.35	S 20
8.6	30 / 32 / 36	$25^{-0.005}_{-0.014}$	23.9	20	16.35	1.35	S 25
10.8	36 / 40	$30^{-0.005}_{-0.015}$	28.6	21	17.75	1.75	S 30

• Fixed Side spec please refer to P.28~P.29

DF Assembly

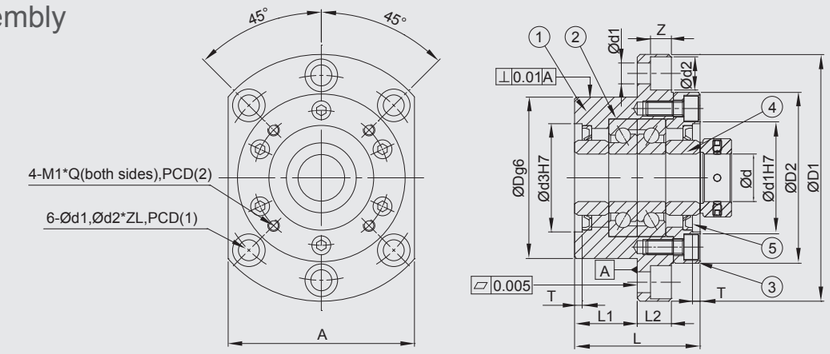

DFD Assembly

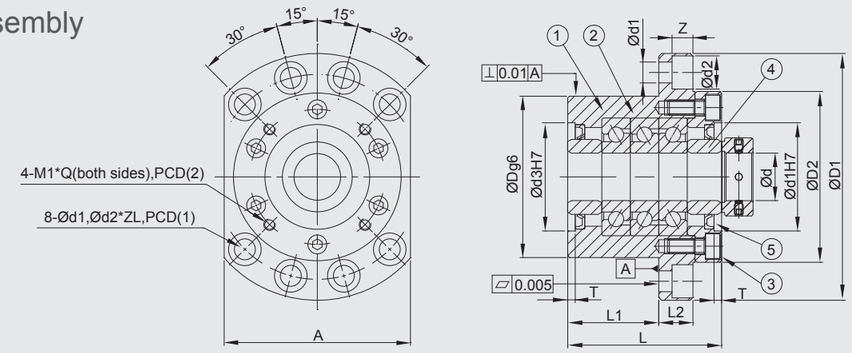

Specification

Model No.		Dimensions													
Black Dyed	Ni Plating	Ød	ØD	ØD1	ØD2	Ød3	L	L1	L2	A	PCD (1)	PCD (2)	Ød1	Ød2	Z
GWFF17B-DF	GWFF17N-DF	17	70	106	72	45	60	32	15	80	88	58	8.7	14	8.5
GWFF20B-DF	GWFF20N-DF	20	70	106	72	45	60	32	15	80	88	58	8.7	14	8.5
GWFF25B-DF	GWFF25N-DF	25	85	130	90	57	66	33	18	100	110	70	10.7	17.5	11
GWFF25B-DFD	GWFF25N-DFD	25	85	130	90	57	81	48	18	100	110	70	10.7	17.5	11
GWFF30B-DF	GWFF30N-DF	30	85	130	90	57	66	33	18	100	110	70	10.7	17.5	11
GWFF30B-DFD	GWFF30N-DFD	30	85	130	90	57	81	48	18	100	110	70	10.7	17.5	11
GWFF35B-DF	GWFF35N-DF	35	95	142	102	69	66	33	18	106	121	80	10.7	17.5	11
GWFF35B-DFD	GWFF35N-DFD	35	95	142	102	69	81	48	18	106	121	80	10.7	17.5	11
GWFF40B-DF	GWFF40N-DF	40	95	142	102	69	66	33	18	106	121	80	10.7	17.5	11
GWFF40B-DFD	GWFF40N-DFD	40	95	142	102	69	81	48	18	106	121	80	10.7	17.5	11

Ordering Example	GWFF	-	20	-	N	-	DFD	-	J
	Model No.		Shaft Dia.		Surface finish		Bearing Assembly		Bearing category

GWFF-B-DF

GWFF-N-DF

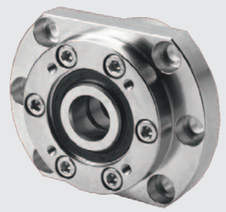

Components

No.	Parts	Material	Q´ty
①	Main housing	S50C	1
②	Bearing	SUJ2	1 pair
③	Cover	S50C	1
④	Space ring	S50C	2
⑤	Seal (<Ø8 one seal only)	NBR	2
⑥	Lucknut	S50C	1

- ①②③ are in one unit. No disassemble for accuracy concern.
- Bearing filled with proper lithium soap lubricant and sealed.

Recommended processing dimensions of shaft

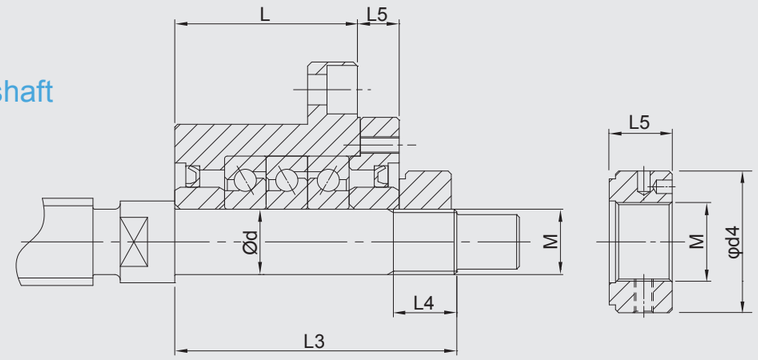

Unit：mm

			Basic dynamic load(C) (N)	Limited load (N)	Pre-load (N)	Axial rigidity (N/um)	Start torque (N·cm)	Shaft dimensions			Lock nut			Weight (kg)
T	M1	Q						Ød	L3	L4	M	Ød4	L5	
3	M5	10	21900	26600	2150	750	14	17	81	23	M17*P1.0	37	18	1.9
3	M5	10	21900	26600	2150	750	14	20	81	23	M20*P1.0	40	18	1.9
4	M6	14	28500	40500	3150	1000	23	25	89	26	M25*P1.5	45	20	3.1
4	M6	14	46500	81500	4300	1470	31	25	104	26	M25*P1.5	45	20	3.4
4	M6	14	29200	43000	3350	1030	24	30	89	26	M30*P1.5	50	20	3.0
4	M6	14	47500	86000	4500	1520	33	30	104	26	M30*P1.5	50	20	3.3
4	M6	14	31000	50000	3800	1180	28	35	92	30	M35*P1.5	55	22	3.4
4	M6	14	50500	100000	5200	1710	37	35	107	30	M35*P1.5	55	22	4.3
4	M6	14	31500	52000	3900	1230	28	40	92	30	M40*P1.5	60	22	3.6
4	M6	14	51500	104000	5300	1810	38	40	107	30	M40*P1.5	60	22	4.2

Model No.	Parts no. ①③④⑥	
	Material	Surface Finish
GSW□□-S□B	S50C	Black Dyed
GSW□□-S□N		Ni-Plating

GSW10 ~ GSW20

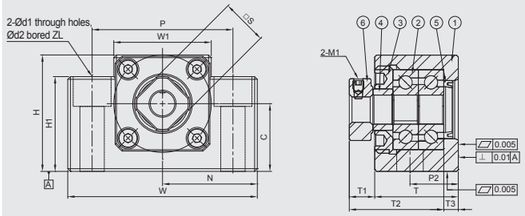

GSW06 ~ GSW08

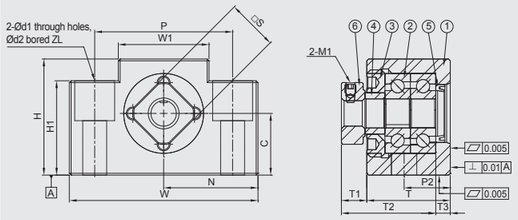

GSW25

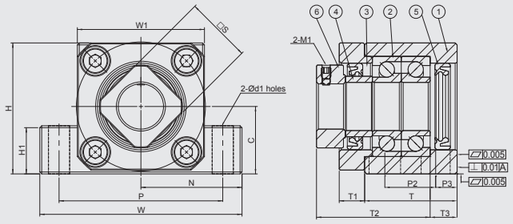

Specification

Standard Type			Dimensions														
Light pre-loaded	Medium pre-loaded	Hard pre-loaded	Ød	T	T1	T2	T3	W	W1	H	H1	N±0.02	C	P	P2	P3	Ød1
GSW06-SL□	GSW06-SM□	GSW06-SH□	6	20	5.5	22.5	3.5	42	18	25	20	21	13 $^{0}_{-0.04}$	30	-	-	5.5
GSW08-SL□	GSW08-SM□	GSW08-SH□	8	23	7	23	4	52	25	32	26	26	17 $^{0}_{-0.04}$	38	-	-	6.6
GSW10-SL□	GSW10-SM□	GSW10-SH□	10	24	6	29.5	6	70	36	43	35	35	25 $^{0}_{-0.04}$	52	-	-	9
GSW12-SL□	GSW12-SM□	GSW12-SH□	12	24	6	29.5	6	70	36	43	35	35	25 $^{0}_{-0.04}$	52	-	-	9
GSW15-SL□	GSW15-SM□	GSW15-SH□	15	25	6	38	5	80	41	50	40	40	30 $^{0}_{-0.04}$	60	-	-	11
GSW20-SL□	GSW20-SM□	GSW20-SH□	20	42	10	52	10	95	56	58	45	47.5	30 $^{0}_{-0.04}$	75	22	10	11
GSW25-SL□	GSW25-SM□	GSW25-SH□	25	48	13	59	14	105	66	68	25	52.5	35 $^{0}_{-0.04}$	85	30	9	11

Ordering Example	GSW	-	10	-	SL	-	N	-	J
	Model No.		Shaft Dia.		Grade/Pre-loaded		Surface finish		Bearing category

GSW-B

GSW-N

Components

No.	Parts	Material	Q´ty
①	Main housing	S50C	1
②	Bearing	SUJ2	1 pair
③	Cover	S50C	1
④	Space ring	S50C	2
⑤	Seal (<Ø8 one seal only)	NBR	2
⑥	Lucknut	S50C	1

- ①②③ are in one unit. No disassemble for accuracy concern.
- Bearing filled with proper lithium soap lubricant and sealed.

Recommended processing dimensions of shaft

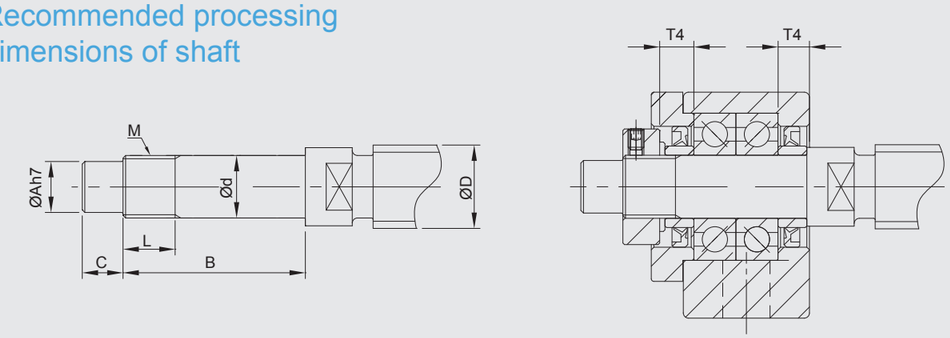

Unit：mm

			Recommended processing dimensions of shaft							
			Ball Screw Shaft O. D.	Shaft End Diameter	Processing sizes of shaft			Nominal thread		Space ring length
Ød2	Z	□S	ØD	Ød	ØA	B	C	M	L	T4
9.5	11	12	8	6 $^{-0.005}_{-0.012}$	4	28	8	M6*P0.75	8	5
11	11	14	10 / 12	8 $^{-0.005}_{-0.012}$	6	32	9	M8*P1.0	10	5.5
14	11	16	12 / 14 / 15	10 $^{-0.005}_{-0.012}$	8	36	15	M10*P1.0	11	5.5
14	11	19	14 / 15 / 16	12 $^{-0.005}_{-0.012}$	10	36	15	M12*P1.0	11	5.5
17	15	22	18 / 20	15 $^{-0.005}_{-0.014}$	12	47	20	M15*P1.0	13	6
17	15	30	25 / 28 / 30	20 $^{-0.005}_{-0.014}$	17	62	25	M20*P1.0	17	11
-	-	35	30 / 32 / 36	25 $^{-0.005}_{-0.014}$	20	75	30	M25*P1.5	20	15

• Supported side spec refer to P.48~P.49

Model No.	Parts no. ①③④⑥	
	Material	Surface Finish
GSWE □□-S□B	S50C	Black Dyed
GSWE □□-S□N		Ni-Plating

GSWE10 ~ GSWE20

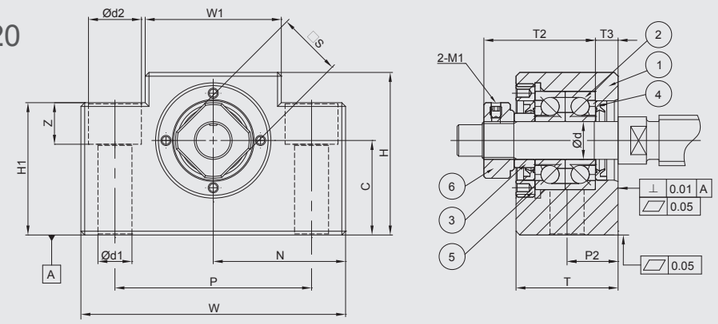

GSWE25

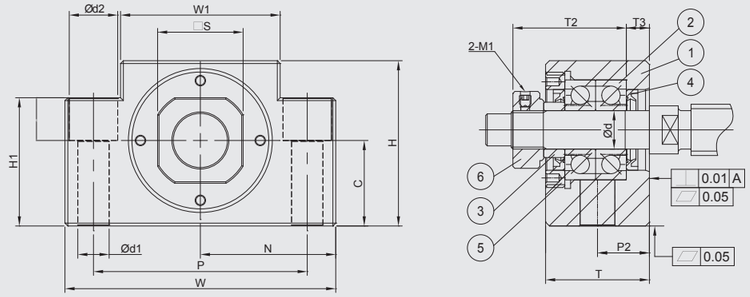

Specification

Standard Type			Dimensions														
Light pre-loaded	Medium pre-loaded	Hard pre-loaded	Ød	T	T1	T2	T3	W	W1	H	H1	N±0.02	C	P	P2	P3	Ød1
GSWE10-SL □	GSWE10-SM □	GSWE10-SH □	10	27	8.5	29.5	6	70	36	43	35	35	$25^{0}_{-0.04}$	52	-	-	9
GSWE12-SL □	GSWE12-SM □	GSWE12-SH □	12	27	8.5	29.5	6	70	36	43	35	35	$25^{0}_{-0.04}$	52	-	-	9
GSWE15-SL □	GSWE15-SM □	GSWE15-SH □	15	29	14	38	5	80	41	50	40	40	$30^{0}_{-0.04}$	60	-	-	11
GSWE20-SL □	GSWE20-SM □	GSWE20-SH □	20	48	14	52	10	95	56	58	45	47.5	$30^{0}_{-0.04}$	75	22	13	11
GSWE25-SL □	GSWE25-SM □	GSWE25-SH □	25	58	15	59	14	105	66	68	25	52.5	$35^{0}_{-0.04}$	85	30	14	11

Ordering Example	GSWE	-	10	-	SL	-	N	-	J
	Model No.		Shaft Dia.		Grade/Pre-loaded		Surface finish		Bearing category

GSWE-B GSWE-N

Components

No.	Parts	Material	Q´ty
①	Main housing	S50C	1
②	Bearing	SUJ2	1 pair
③	Cover	S50C	1
④	Space ring	S50C	2
⑤	Seal (<Ø8 one seal only)	NBR	2
⑥	Lucknut	S50C	1

- ①②③ are in one unit. No disassemble for accuracy concern.
- Bearing filled with proper lithium soap lubricant and sealed.

Recommended processing dimensions of shaft

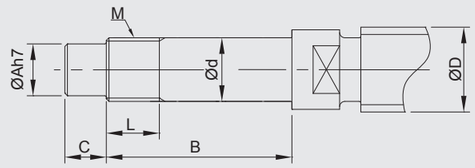

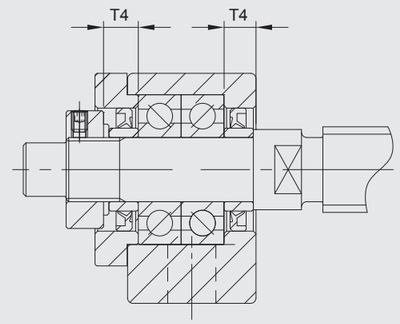

Unit：mm

			Recommended processing dimensions of shaft							
			Ball Screw Shaft O. D.	Shaft End Diameter	Processing sizes of shaft			Nominal thread		Space ring length
Ød2	Z	□S	ØD	Ød	ØA	B	C	M	L	T4
14	11	16	12 / 14 / 15	$10^{-0.005}_{-0.012}$	8	36	15	M10*P1.0	11	5.5
14	11	19	14 / 15 / 16	$12^{-0.005}_{-0.012}$	10	36	15	M12*P1.0	11	5.5
17	15	22	18 / 20	$15^{-0.005}_{-0.014}$	12	47	20	M15*P1.0	13	6
17	15	30	25 / 28 / 30	$20^{-0.005}_{-0.014}$	17	62	25	M20*P1.0	17	11
-	-	35	30 / 32 / 36	$25^{-0.005}_{-0.014}$	20	75	30	M25*P1.5	20	15

• Supported side spec refer to P.50~P.51

Model No.	Parts no. ①③④⑥	
	Material	Surface Finish
GRW □□ - S □B	S50C	Black Dyed
GRW □□ - S □N		Ni-Plating

GRW06 ~ GRW08

Installation(A)

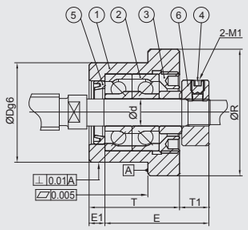

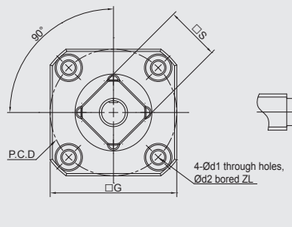

Installation(B)

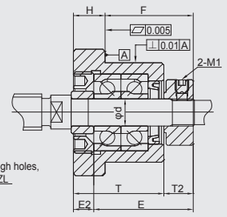

GRW10 ~ GRW25

Installation(A)

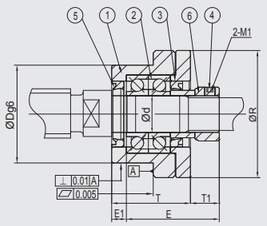

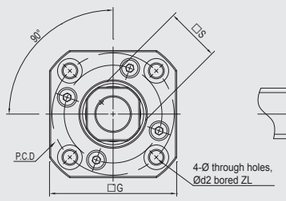

Installation(B)

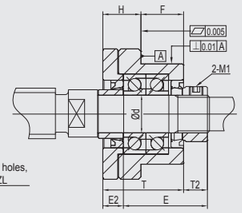

Specification

Standard Type			Dimensions												
Light pre-loaded	Medium pre-loaded	Hard pre-loaded	Ød	ØR	□G	T	H	F	ØDg6	E	Installation(A)		Installation(B)		PCD
											T1	E1	T2	E2	
GRW06-SL□	GRW06-SM□	GRW06-SH□	6	36	28	20	7	13	$22^{-0.007}_{-0.020}$	22.5	5.5	3.5	6.5	4.5	28
GRW08-SL□	GRW08-SM□	GRW08-SH□	8	43	35	23	9	14	$28^{-0.007}_{-0.020}$	26	7	4	8	5	35
GRW10-SL□	GRW10-SM□	GRW10-SH□	10	52	42	29	13	16	$34^{-0.009}_{-0.025}$	29.5	5.5	5	8.5	8	42
GRW12-SL□	GRW12-SM□	GRW12-SH□	12	54	44	29	13	16	$36^{-0.009}_{-0.025}$	29.5	5.5	5	8.5	8	44
GRW15-SL□	GRW15-SM□	GRW15-SH□	15	63	52	32	15	17	$40^{-0.009}_{-0.025}$	38	12	6	14	8	50
GRW20-SL□	GRW20-SM□	GRW20-SH□	20	85	68	52	22	30	$57^{-0.010}_{-0.029}$	52	10	10	14	14	70
GRW25-SL□	GRW25-SM□	GRW25-SH□	25	98	79	57	27	30	$63^{-0.009}_{-0.025}$	59	13	10	20	17	80

Ordering Example	GRW	-	10	-	SL	-	N	-	J
	Model No.		Shaft Dia.		Grade/Pre-loaded		Surface finish		Bearing category

GRW-B

GRW-N

Components

No.	Parts	Material	Q´ty
①	Main housing	S50C	1
②	Bearing	SUJ2	1 pair
③	Cover	S50C	1
④	Space ring	S50C	2
⑤	Seal (<Ø8 one seal only)	NBR	2
⑥	Lucknut	S50C	1

- ①②③ are in one unit. No disassemble for accuracy concern.
- Bearing filled with proper lithium soap lubricant and sealed.

Recommended processing dimensions of shaft

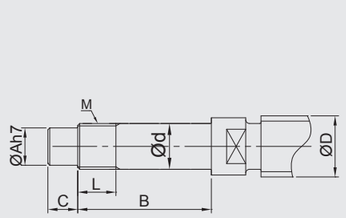

Installation(A)

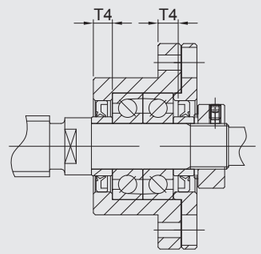

Installation(B)

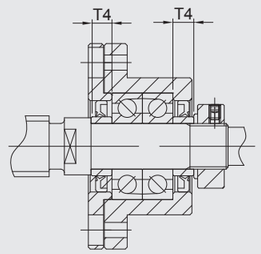

Unit：mm

				Recommended processing dimensions of shaft						
				Ball Screw Shaft O. D.	Shaft End Diameter	Processing sizes of shaft			Nominal thread		Space ring length
Ød1	Ød2	Z	□S	ØD	Ød	ØA	B	C	M	L	T4
2.9	5.5	3.5	12	8	$6^{-0.005}_{-0.012}$	4	28	8	M6*P0.75	8	5
3.4	6.5	4	14	10 / 12	$8^{-0.005}_{-0.012}$	6	32	9	M8*P1.0	10	5.5
4.5	8	6	16	12 / 14 / 15	$10^{-0.005}_{-0.012}$	8	36	15	M10*P1.0	11	5.5
4.5	8	6	19	14 / 15 / 16	$12^{-0.005}_{-0.012}$	10	36	15	M12*P1.0	11	5.5
5.5	9.5	6	22	18 / 20	$15^{-0.005}_{-0.014}$	12	47	20	M15*P1.0	13	10
6.6	11	10	30	25 / 28 / 30	$20^{-0.005}_{-0.014}$	17	62	25	M20*P1.0	17	11
9	15	13	35	30 / 32 / 36	$25^{-0.005}_{-0.014}$	20	76	30	M25*P1.5	20	15

• Supported side spec refer to P.52~P.53

Model No.	Parts no. ①③④⑥	
	Material	Surface Finish
GRWE □□ - S □B	S50C	Black Dyed
GRWE □□ - S □N		Ni-Plating

GRWE10 ~ GRWE25

Installation(A)

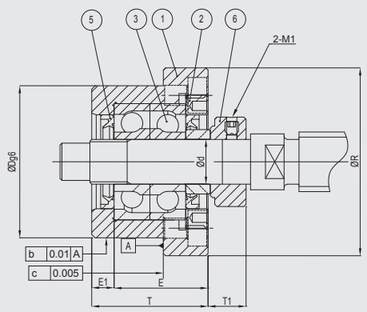

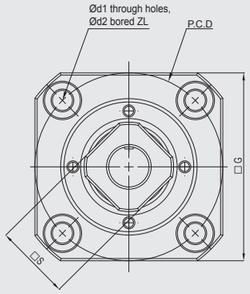

Installation(B)

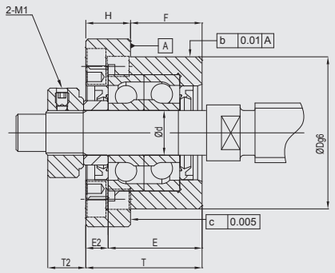

Specification

Standard Type			Dimensions												
Light pre-loaded	Medium pre-loaded	Hard pre-loaded	Ød	ØR	□G	T	H	F	ØDg6	E	Installation(A)		Installation(B)		PCD
											T1	E1	T2	E2	
GRWE10-SL □	GRWE10-SM □	GRWE10-SH □	10	52	42	26	10	16	$34^{-0.009}_{-0.025}$	29.5	5.5	5	8.5	8	42
GRWE12-SL □	GRWE12-SM □	GRWE12-SH □	12	54	44	26	10	16	$36^{-0.009}_{-0.025}$	29.5	5.5	5	8.5	8	44
GRWE15-SL □	GRWE15-SM □	GRWE15-SH □	15	63	52	30	13	17	$40^{-0.009}_{-0.025}$	38	12	6	14	8	50
GRWE20-SL □	GRWE20-SM □	GRWE20-SH □	20	85	68	48	18	30	$57^{-0.010}_{-0.029}$	52	10	10	14	14	70
GRWE25-SL □	GRWE25-SM □	GRWE25-SH □	25	98	79	54	24	30	$63^{-0.009}_{-0.025}$	59	13	10	20	17	80

Ordering Example	GRWE	-	10	-	SL	-	N	-	J
	Model No.		Shaft Dia.		Grade/Pre-loaded		Surface finish		Bearing category

GRWE-B

GRWE-N

Components

No.	Parts	Material	Q´ty
①	Main housing	S50C	1
②	Bearing	SUJ2	1 pair
③	Cover	S50C	1
④	Space ring	S50C	2
⑤	Seal (<Ø8 one seal only)	NBR	2
⑥	Lucknut	S50C	1

- ①②③ are in one unit. No disassemble for accuracy concern.
- Bearing filled with proper lithium soap lubricant and sealed.

Recommended processing dimensions of shaft

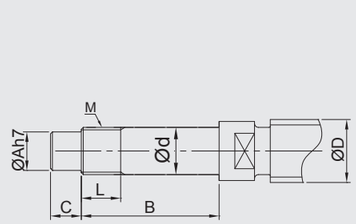

Installation(A)

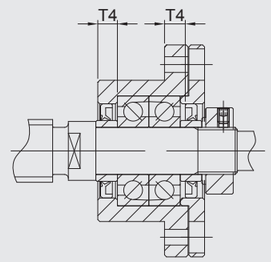

Installation(B)

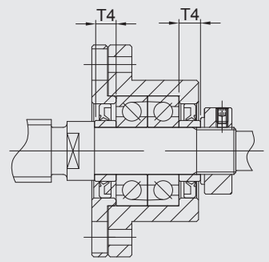

Unit：mm

				Recommended processing dimensions of shaft							
				Ball Screw Shaft O. D.	Shaft End Diameter	Processing sizes of shaft			Nominal thread		Space ring length
Ød1	Ød2	Z	□S	ØD	Ød	ØA	B	C	M	L	T4
4.5	8	4.5	16	12 / 14 / 15	$10^{-0.005}_{-0.012}$	8	36	15	M10*P1.0	11	5.5
4.5	8	4.5	19	14 / 15 / 16	$12^{-0.005}_{-0.012}$	10	36	15	M12*P1.0	11	5.5
5.5	9.5	5.5	22	18 / 20	$15^{-0.005}_{-0.014}$	12	47	20	M15*P1.0	13	10
6.6	11	6.5	30	25 / 28 / 30	$20^{-0.005}_{-0.014}$	17	62	25	M20*P1.0	17	11
9	15	8.5	35	30 / 32 / 36	$25^{-0.005}_{-0.014}$	20	76	30	M25*P1.5	20	15

• Supported side spec refer to P.54~P.55

Model No.	Parts no. ①	
	Material	Surface Finish
GUN □□ - SB	S50C	Black Dyed
GUN □□ - SN		Ni-Plating

GUN06 ~ GUN08

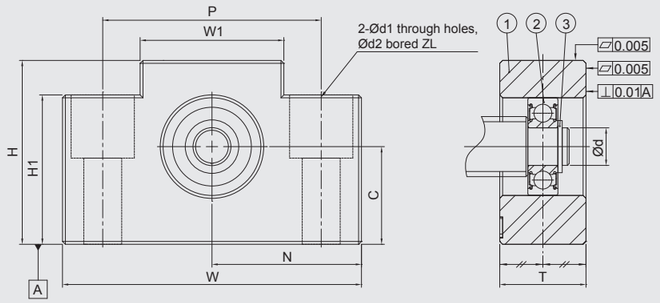

GUN10 ~ GUN25

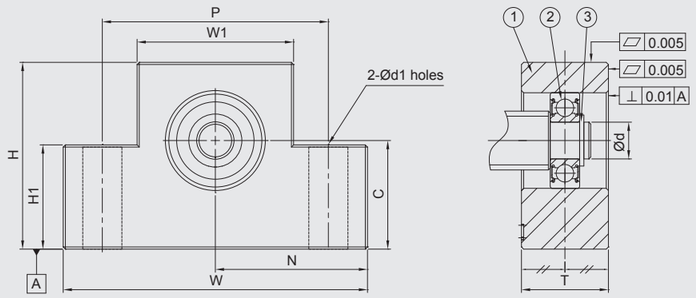

Specification

Standard Type	Dimensions									
	Ød	T	W	W1	H	H1	P	Ød1	Ød2	Z
GUN06-S□	6	12	42	18	25	20	30	5.5	9.5	11
GUN08-S□	6	15	52	25	32	26	38	6.6	11	11
GUN10-S□	8	20	70	36	43	24	52	9	-	-
GUN12-S□	10	20	70	36	43	24	52	9	-	-
GUN15-S□	15	20	80	41	50	25	60	11	-	-
GUN20-S□	20	26	95	56	58	30	75	11	-	-
GUN25-S□	25	30	105	66	68	25	85	11	-	-

Ordering Example	GUN	-	10	-	S	-	N	-	J
	Model No.		Shaft Dia.		Grade		Surface finish		Bearing category

GUN-B

GUN-N

Components

No.	Parts	Material	Q´ty
①	Main housing	S50C	1
②	Bearing	SUJ2	1
③	Snap ring	SWB	1

- Bearing filled with proper lithium soap lubricant maintenance free.
- Bearing with two steel covers in black dyed.
- Bearing with two touch-type plistic covers in Ni-plating.

Recommended processing dimensions of shaft

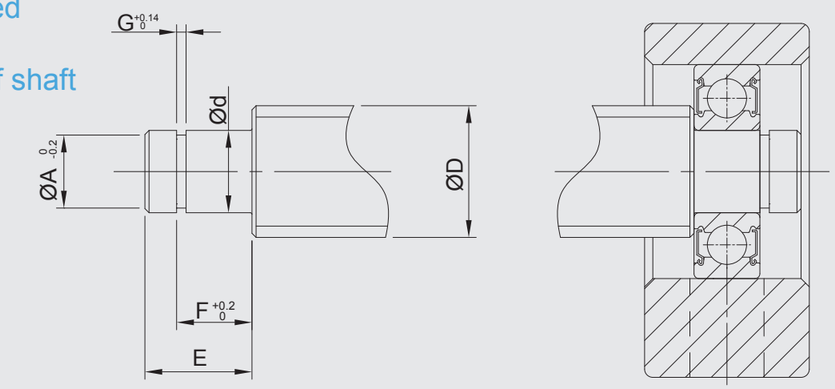

Unit：mm

N±0.02	C	Recommended processing dimensions of shaft: Ball Screw Shaft O. D. ØD	Shaft End Diameter Ød	Groove sizes machined for snap ring ØA	E	F	G	Snap ring
21	13 0 -0.04	8	6 -0.005 -0.012	6	9	6.7	0.8	S 06
26	17 0 -0.04	8 / 10	6 -0.005 -0.012	6	9	6.7	0.8	S 06
35	25 0 -0.04	12 / 14 / 15	8 -0.005 -0.012	7.6	10	7.9	0.9	S 08
35	25 0 -0.04	14 /15 / 16	10 -0.005 -0.012	9.6	11	9.15	1.15	S 10
40	30 0 -0.04	18 / 20	15 -0.005 -0.014	14.3	13	10.15	1.15	S 15
47.5	30 0 -0.04	25 / 28 / 30	20 -0.005 -0.014	19	19	15.35	1.35	S 20
52.5	35 0 -0.04	28 / 30 / 32	25 -0.005 -0.014	25	21	16.5	1.35	S 25

• Fixed Side spec please refer to P.40~P.41

Model No.	Parts no. ①	
	Material	Surface Finish
GTN □□ - SB	S50C	Black Dyed
GTN □□ - SN		Ni-Plating

GTN06 ~ GTN08

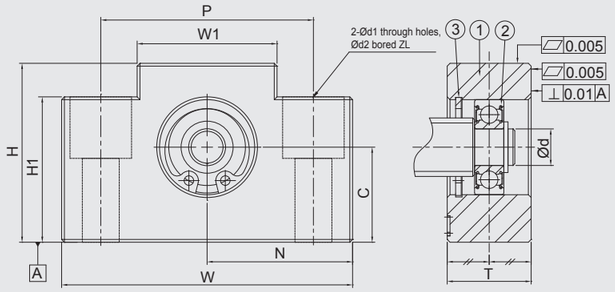

GTN10 ~ GTN25

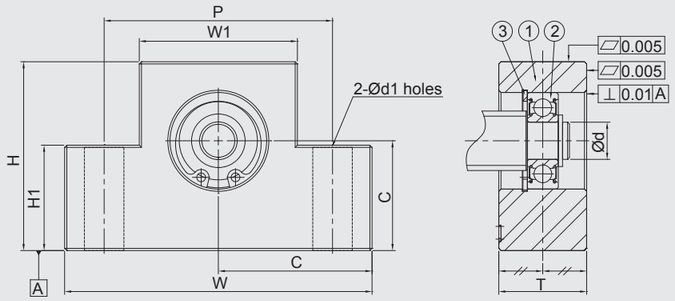

Specification

Standard Type	Dimensions									
	Ød	T	W	W1	H	H1	P	Ød1	Ød2	Z
GTN06-S □	6	12	42	18	25	20	30	5.5	9.5	11
GTN08-S □	6	15	52	25	32	26	38	6.6	11	11
GTN10-S □	8	20	70	36	43	24	52	9	-	-
GTN12-S □	10	20	70	36	43	24	52	9	-	-
GTN15-S □	15	20	80	41	50	25	60	11	-	-
GTN20-S □	20	26	95	56	58	30	75	11	-	-
GTN25-S □	25	30	105	66	68	25	85	11	-	-

Ordering Example	GTN	-	10	-	S	-	N	-	J
	Model No.		Shaft Dia.		Grade		Surface finish		Bearing category

GTN-B

GTN-N

Components

No.	Parts	Material	Q´ty
①	Main housing	S50C	1
②	Bearing	SUJ2	1
③	Snap ring	SWB	1

- Bearing filled with proper lithium soap lubricant maintenance free.
- Bearing with two steel covers in black dyed.
- Bearing with two touch-type plistic covers in Ni-plating.

Recommended processing dimensions of shaft

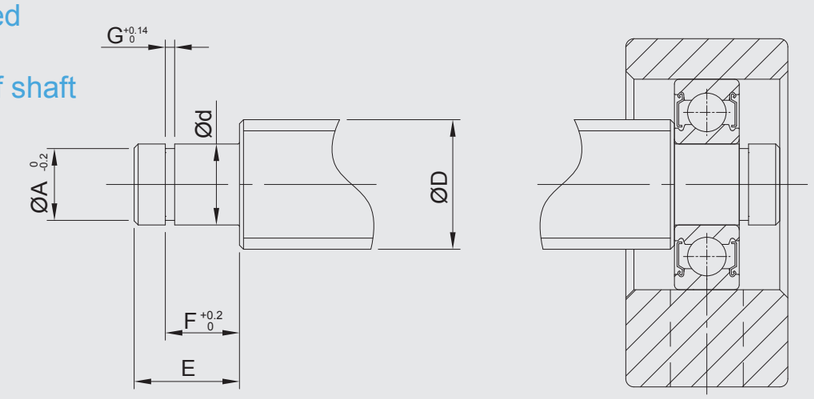

Unit：mm

		Recommended processing dimensions of shaft						Snap ring
		Ball Screw Shaft O. D.	Shaft End Diameter	Groove sizes machined for snap ring				
N ±0.02	C	ØD	Ød	ØA	E	F	G	
21	13 0 -0.04	8	6 -0.005 -0.012	6	9	6.7	0.8	S 06
26	17 0 -0.04	8 / 10	6 -0.005 -0.012	6	9	6.7	0.8	S 06
35	25 0 -0.04	12 / 14 / 15	8 -0.005 -0.012	7.6	10	7.9	0.9	S 08
35	25 0 -0.04	14 /15 / 16	10 -0.005 -0.012	9.6	11	9.15	1.15	S 10
40	30 0 -0.04	18 / 20	15 -0.005 -0.014	14.3	13	10.15	1.15	S 15
47.5	30 0 -0.04	25 / 28 / 30	20 -0.005 -0.014	19	19	15.35	1.35	S 20
52.5	35 0 -0.04	28 / 30 / 32	25 -0.005 -0.014	25	21	16.5	1.35	S 25

• Fixed Side spec please refer to P.42~P.43

Model No.	Parts no. ①	
	Material	Surface Finish
GUR □□-B	S50C	Black Dyed
GUR □□-N		Ni-Plating

GUR06 ~ GUR25

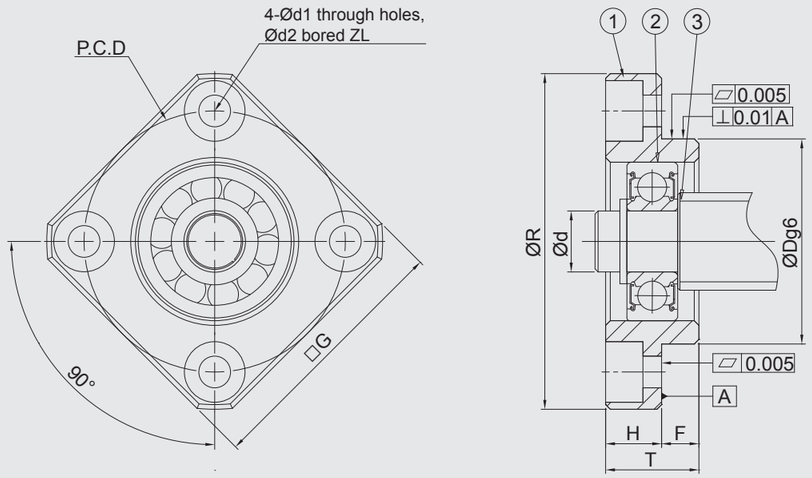

Specification

Standard Type	Dimensions									
	Ød	ØR	□G	T	H	F	ØDg6	PCD	Ød1	Ød2
GUR06-□	6	36	28	10	6	4	$22^{-0.007}_{-0.020}$	28	3.4	6.5
GUR10-□	10	43	35	12	7	5	$28^{-0.007}_{-0.020}$	35	3.4	6.5
GUR12-□	12	52	42	15	7	8	$34^{-0.009}_{-0.025}$	42	4.5	8
GUR15-□	15	63	52	17	9	8	$40^{-0.009}_{-0.025}$	50	5.5	9.5
GUR20-□	20	85	68	20	11	9	$57^{-0.010}_{-0.029}$	70	6.6	11
GUR25-□	25	98	79	24	14	10	$63^{-0.010}_{-0.029}$	80	9	14

Ordering Example	GUR	-	10	-	N	-	J
	Model No.		Shaft Dia.		Surface finish		Bearing category

GUR-B GUR-N

Components

No.	Parts	Material	Q´ty
①	Main housing	S50C	1
②	Bearing	SUJ2	1
③	Snap ring	SWB	1

- Bearing filled with proper lithium soap lubricant maintenance free.
- Bearing with two steel covers in black dyed.
- Bearing with two touch-type plistic covers in Ni-plating.

Recommended processing dimensions of shaft

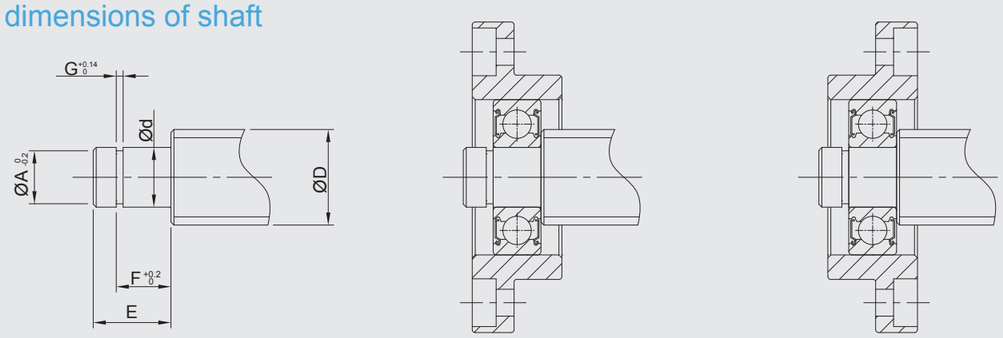

Unit：mm

	Recommended processing dimensions of shaft						Snap ring
	Ball Screw Shaft O. D.	Shaft End Diameter	Groove sizes machined for snap ring				
Z	ØD	Ød	ØA	E	F	G	
4	8	$6^{-0.005}_{-0.012}$	5.7	9	6.8	0.8	S 06
4	12 / 14 / 15	$8^{-0.005}_{-0.012}$	7.6	10	7.9	0.9	S 08
4	14 / 15	$10^{-0.005}_{-0.012}$	9.6	11	9.15	1.15	S 10
5.5	18 / 20	$15^{-0.005}_{-0.014}$	14.3	13	10.15	1.15	S 15
6.5	25 / 28 / 30	$20^{-0.005}_{-0.014}$	19	19	15.35	1.35	S 20
8.5	30 / 32 / 36	$25^{-0.005}_{-0.014}$	23.9	20	16.35	1.35	S 25

• Fixed Side spec please refer to P.44~P.45

Model No.	Parts no. ①	
	Material	Surface Finish
GTR □□-B	S50C	Black Dyed
GTR □□-N		Ni-Plating

GTR06 ~ GTR25

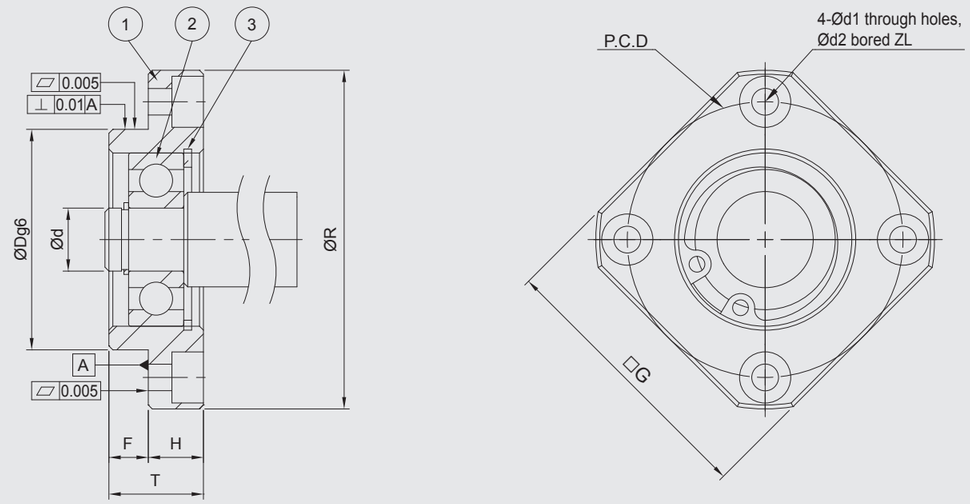

Specification

Standard Type	Dimensions									
	Ød	ØR	□G	T	H	F	ØDg6	PCD	Ød1	Ød2
GTR06-□	6	36	28	10	6	4	$22^{-0.007}_{-0.020}$	28	3.4	6.5
GTR10-□	10	43	35	12	7	5	$28^{-0.007}_{-0.020}$	35	3.4	6.5
GTR12-□	12	52	42	15	7	8	$34^{-0.009}_{-0.025}$	42	4.5	8
GTR15-□	15	63	52	17	9	8	$40^{-0.009}_{-0.025}$	50	5.5	9.5
GTR20-□	20	85	68	20	11	9	$57^{-0.010}_{-0.029}$	70	6.6	11
GTR25-□	25	98	79	24	14	10	$63^{-0.010}_{-0.029}$	80	9	14

Ordering Example	GTR	-	10	-	N	-	J
	Model No.		Shaft Dia.		Surface finish		Bearing category

GTR-B GTR-N

Components

No.	Parts	Material	Q´ty
①	Main housing	S50C	1
②	Bearing	SUJ2	1
③	Snap ring	SWB	1

- Bearing filled with proper lithium soap lubricant maintenance free.
- Bearing with two steel covers in black dyed.
- Bearing with two touch-type plistic covers in Ni-plating.

Recommended processing dimensions of shaft

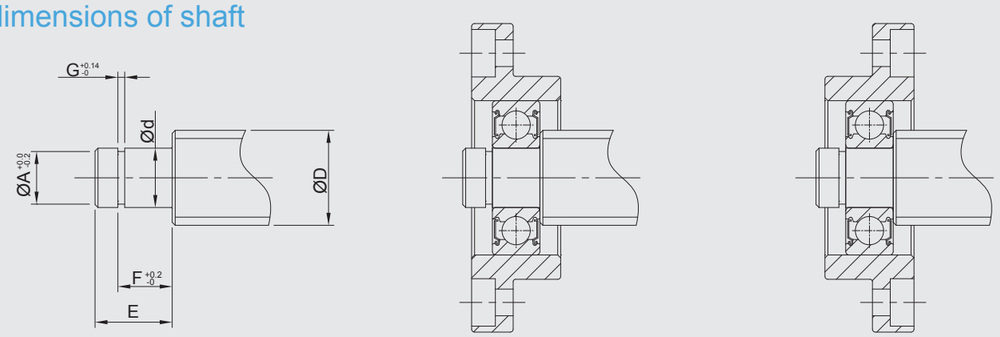

Unit：mm

Z	Recommended processing dimensions of shaft						Snap ring
	Ball Screw Shaft O. D.	Shaft End Diameter	Groove sizes machined for snap ring				
	ØD	Ød	ØA	E	F	G	
4	8	$6^{-0.005}_{-0.012}$	5.7	9	6.8	0.8	S 06
4	12 / 14 / 15	$8^{-0.005}_{-0.012}$	7.6	10	7.9	0.9	S 08
4	14 / 15 / 16	$10^{-0.005}_{-0.012}$	9.6	11	9.15	1.15	S 10
5.5	18 / 20	$15^{-0.006}_{-0.014}$	14.3	13	10.15	1.15	S 15
6.5	25 / 28 / 30	$20^{-0.005}_{-0.014}$	19	19	15.35	1.35	S 20
8.5	30 / 32 / 36	$25^{-0.005}_{-0.014}$	23.9	20	16.35	1.35	S 25

• Fixed Side spec please refer to P.46~P.47

GRLN-B

GRLN-N

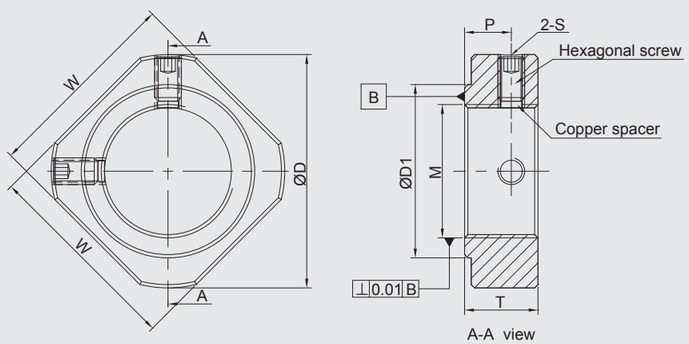

Specification (Material：S50C)

Unit：mm

Model No.		M	W	T	ØD	ØD1	P	S
Black Dyed	Ni Plating							
GRLN06-B	GRLN06-N	M6*P0.75	12	5	14.5	9	2.7	M3
GRLN08-B	GRLN08-N	M8*P1.0	14	6.5	17	13	4	
GRLN10-B	GRLN10-N	M10*P1.0	16	8	19	14	5.5	
GRLN12-B	GRLN12-N	M12*P1.0	19	8	22	17	5.5	
GRLN15-B	GRLN15-N	M15*P1.0	22	8	25	21	4.5	
GRLN17-B	GRLN17-N	M17*P1.0	24	13	30	25	9.5	M4
GRLN20-B	GRLN20-N	M20*P1.0	30	11	35	26	7	
GRLN25-B	GRLN25-N	M25*P1.5	35	15	43	33	10	M5
GRLN30-B	GRLN30-N	M30*P1.5	40	20	48	39	14	M6
GRLN35-B	GRLN35-N	M35*P1.5	50	21	60	46	14	M8
GRLN40-B	GRLN40-N	M40*P1.5	50	25	63	50	18	

GCLN-B

GCLN-N

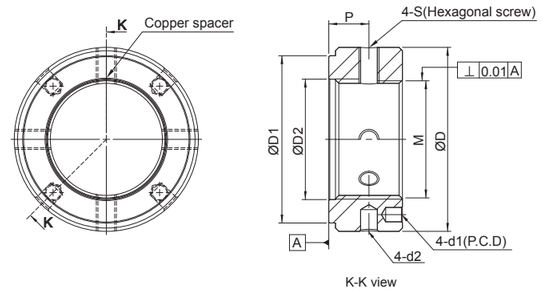

Specification (Material：S50C)

Unit：mm

Model No.		M	T	ØD	ØD1	ØD2	P.C.D	Ød1	Ød2	P	S	Wrench torque
Black Dyed	Ni Plating											(N.cm)
GCLN17-B	GCLN17-N	M17*P1.0	18	37	27	/	27	4.3	4	10	M6	5400
GCLN20-B	GCLN20-N	M20*P1.0	18	40	30	21	30		4	10		7350
GCLN25-B	GCLN25-N	M25*P1.5	20	45	40	26	35		4	12		13200
GCLN30-B	GCLN30-N	M30*P1.5	20	50	40	31	40		5	11		19600
GCLN35-B	GCLN35-N	M35*P1.5	22	55	50	36	45		5	12		29400
GCLN40-B	GCLN40-N	M40*P1.5	22	60	50	41	50		5	12		39200

• Copper space integrated to the set scren.

Space Ring

GSR-B

GSR-N

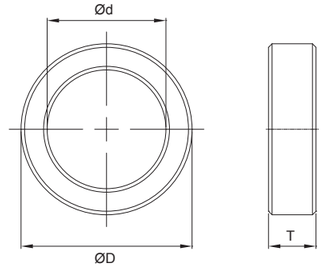

Specification (Material：S50C)

Unit：mm

Model No.		Ød	ØD	T
Black Dyed	Ni Plating			
GSR06-B	GSR06-N	6	9.4	5
GSR08-B	GSR08-N	8	11.4	5.5
GSR10-B	GSR10-N	10	14.4	5.5
GSR12-B	GSR12-N	12	15.4	5.5
GSR12-1-B	GSR12-1-N	12	14.4	5.5
GSR15-B	GSR15-N	15	19.4	6
GSR15-1-B	GSR15-1-N	15	19.4	10
GSR17-B	GSR17-N	17	24.4	7
GSR17-1-B	GSR17-1-N	17	29.4	15
GSR17-2-B	GSR17-2-N	17	24.4	10
GSR20-B	GSR20-N	20	25.4	8
GSR20-1-B	GSR20-1-N	20	25.4	11

Model No.		Ød	ØD	T
Black Dyed	Ni Plating			
GSR20-2-B	GSR20-2-N	20	29.4	15
GSR25-B	GSR25-N	25	31.4	9
GSR25-1-B	GSR25-1-N	25	31.4	15
GSR25-2-B	GSR25-2-N	25	39.4	18
GSR30-B	GSR30-N	30	39.4	9
GSR30-1-B	GSR30-1-N	30	39.4	18
GSR35-B	GSR35-N	35	44.4	12
GSR35-1-B	GSR35-1-N	35	48.4	18
GSR40-B	GSR40-N	40	48.4	15

GMT Model Size & Bearing No.

Fixed Side (Standard)

GMT model	Size	Ball bearing no.
GAK06	06	706
GAK08	08	708
GAK10	10	7000
GAK12	12	7001
GAK15	15	7002
GAK20	20	7204
GAK25	25	7205
GBK10	10	7000
GBK12	12	7001
GBK15	15	7002
GBK17	17	7203
GBK20	20	7004
GBK25	25	7205
GBK30	30	7206
GBK35	35	7207
GBK40	40	7208
GEK06	06	706
GEK08	08	708
GEK10	10	7000
GEK12	12	7001
GEK15	15	7002
GEK20	20	7204
GFK06	06	706
GFK08	08	708
GFK10	10	7000
GFK12	12	7001
GFK15	15	7002
GFK17	17	7203
GFK20	20	7204
GFK25	25	7205
GFK30	30	7206

GMT model	Size	Ball bearing no.
GSW06	06	706
GSW08	08	708
GSW10	10	7000
GSW12	12	7001
GSW15	15	7002
GSW20	20	7204
GSW25	25	7205
GSWE10	10	7000
GSWE12	12	7001
GSWE15	15	7002
GSWE20	20	7204
GSWE25	25	7205
GRW06	06	706
GRW08	08	708
GRW10	10	7000
GRW12	12	7001
GRW15	15	7002
GRW20	20	7204
GRW25	25	7205

Fixed Side (Heavy Loading)

GMT model	Size	Ball bearing no.
GWFF17	17	17TAC47B
GWFF20	20	20TAC47B
GWFF25	25	25TAC62B
GWFF30	30	30TAC62B
GWFF35	35	35TAC72B
GWFF40	40	40TAC72B

Fixed Side (Economic)

GMT model	Size	Ball bearing no.
GAK06	06	606
GAK08	08	608
GAK10	10	6000
GAK12	12	6001
GAK15	15	6002
GAK20	20	6204
GBK10	10	6000
GBK12	12	6001
GBK15	15	6002
GBK17	17	6203
GBK20	20	6004
GEK06	06	606
GEK08	08	608
GEK10	10	6000
GEK12	12	6001
GEK15	15	6002
GEK20	20	6204
GFK06	06	606
GFK08	08	608
GFK10	10	6000
GFK12	12	6001
GFK15	15	6002
GFK17	17	6203
GFK20	20	6204

GMT model	Size	Ball bearing no.
GSW06	06	606
GSW08	08	608
GSW10	10	6000
GSW12	12	6001
GSW15	15	6002
GSW20	20	6204
GSWE10	10	6000
GSWE12	12	6001
GSWE15	15	6002
GSWE20	20	6204
GRW06	06	606
GRW08	08	608
GRW10	10	6000
GRW12	12	6001
GRW15	15	6002
GRW20	20	6204
GRWE06	06	606
GRWE08	08	608
GRWE10	10	6000
GRWE12	12	6001
GRWE15	15	6002
GRWE20	20	6204

Support Side (Standard)

GMT model	Size	Ball bearing no.
GAF06	06	606
GAF08	06	606
GAF10	08	608
GAF12	10	6000
GAF15	15	6002
GAF20	20	6204
GAF25	25	6205
GBF10	8	608
GBF12	10	6000
GBF15	15	6002
GBF17	17	6203
GBF20	20	6004
GBF25	25	6205
GBF30	30	6206
GBF35	35	6207
GBF40	40	6208
GEF06	06	606
GEF08	06	606
GEF10	08	608
GEF12	10	6000
GEF15	15	6002
GEF20	20	6204

GMT model	Size	Ball bearing no.
GFF06	06	606
GFF08	06	606
GFF10	08	608
GFF12	10	6000
GFF15	15	6002
GFF17	17	6203
GFF20	20	6204
GFF25	25	6205
GFF30	30	6206

GMT model	Size	Ball bearing no.
GUN06	06	606
GUN08	06	606
GUN10	08	608
GUN12	10	6000
GUN15	15	6002
GUN20	20	6204
GUN25	25	6205
GTN06	06	606
GTN08	06	606
GTN10	08	608
GTN12	10	6000
GTN15	15	6002
GTN20	20	6204
GTN25	25	6205

GMT model	Size	Ball bearing no.
GUR06	06	606
GUR08	06	606
GUR10	08	608
GUR12	10	6000
GUR15	15	6002
GUR20	20	6204
GUR25	25	6205
GTR06	06	606
GTR08	06	606
GTR10	08	608
GTR12	10	6000
GTR15	15	6002
GTR20	20	6204
GTR25	25	6205

Angular Contact Ball Bearing Types

Code	Contact Angle
C	15°
AC	25°
A	30°
B	40°
TAC	60°

Ball Bearing Accuracy Reference

Code	Accuracy Grade	Description
P2	★★★★★★	ISO Grade 2
P3	★★★★★	Special Accuracy (Dimension Accuracy ISO Grade 4 Rotation Accuracy ISO Grade 2)
P4	★★★★	ISO Grade 4
P5	★★★	ISO Grade 5
P6	★★	ISO Grade 6
P0	★	ISO Grade 0

Ballscrew Grade and Recommended Bearing Reference

Ball Screw Grade	Recommended Pre-Loaded	Recommended Ball Bearing Grade
C0	Medium / Heavy Pre-Loaded	P2 ~ P3
C1	Medium / Heavy Pre-Loaded	P3 ~ P4
C3	Medium / Heavy Pre-Loaded	P4 ~ P5
C5	Light / Medium Pre-Loaded	P5、P6、P0
C7	Light Pre-Loaded	P0
C7 C9 C10	Light Pre-Loaded	Code 6 series

Angular Contact Ball Bearing Assembly Types

Type	Number of Bearings	Description	Type	Number of Bearings	Description
DF	2	Face to Face	DTT	4	4-in-one kit
DB	2	Back to Back	DBT	4	
DT	2	Parallel	DBB	4	
DBD	3	3-in-one kit	DFT	4	
DTD	3		DFF	4	
DFD	3				

Angular Contact Ball Bearing Assembly Characters：

1. GMT uses DF and DFD Assembly Types. All bearing assemblies are preloaded precisely to Customer's specifications before shipping. These bearing assemblies are suitable for negative clearance applications. It is not necessary to adjust the preload on customer's site.
2. DF (Face to Face) assembly is suitable for single loading direction applications due to its feature to restrain increased internal loading occurred from mis-assembly, as an advantage, however the conversed concern is its bad loading ability in the very short time.
3. DB (Back to Back) assembly is able to bear radial loading and two-direction of axial loading to produce hight rigidty in the very short time. But, the earlier peeled off problem to the bearings will be happened in case of copule situations such as failed accuracy of support unit, and mis-installation.
4. 3-in-one kit (DBD, DTD, DFD) assembly is able to bear radial and two-direction of axial loading, however, due to disproportionate pre-loaded spreaded, the single bearing is normally bear double loading compared to the other paired-bearing during high speed rotation and cause damages to the bearing. Thus, this assembly is not suggested to be applied for high-speed rotation.

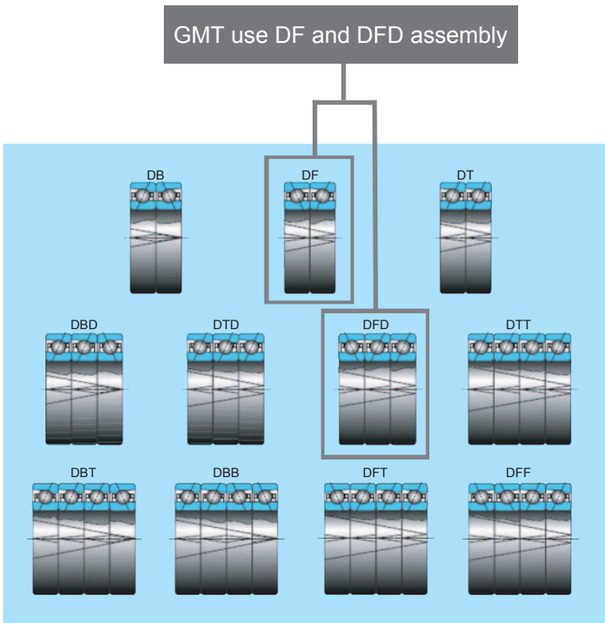

Angular Contact Bearing applied to Fixed Side - RPM & Pre-loaded Reference

Japanese Series Ball Bearing (DF, DB Assembly) Rated RPM Reference

Ball Bearing No.	Ball Bearing Grade	Size	Angular A (30°) Rated RPM	Angular B (40°) Rated RPM	Light Preload (L) Angular Contact A Rated RPM	Light Preload (L) Angular Contact B Rated RPM	Light Preload (M) Angular Contact A Rated RPM	Light Preload (M) Angular Contact B Rated RPM	Light Preload (H) Angular Contact A Rated RPM	Light Preload (H) Angular Contact B Rated RPM
706	P5	6	58000		46400		37700		31900	
708	P5	8	44000		35200		28600		24200	
7000	P5	10	36800	25300	29440	20240	23920	16445	20240	13915
7001	P5	12	32200	23000	25760	18400	20930	14950	17710	12650
7002	P5	15	27600	19550	22080	15640	17940	12708	15180	10753
7203	P5	17	23000	16100	18400	12880	14950	10465	12650	8855
7004	P5	20	20700	14950	16560	11960	13455	9718	11385	8223
7204	P5	20	19550	13800	15640	11040	12708	8970	10753	7590
7205	P5	25	17250	11500	13800	9200	11213	7475	9488	6325
7206	P5	30	13800	9775	11040	7820	8970	6354	7590	5376
7207	P5	35	12075	8050	9660	6440	7849	5233	6641	4428
7208	P5	40	11040	7475	8832	5980	7176	4859	6072	4111

Ball Bearing No.	Ball Bearing Grade	Size	Angular A (30°) Rated RPM	Angular B (40°) Rated RPM	Light Preload (L) Angular Contact A Rated RPM	Light Preload (L) Angular Contact B Rated RPM	Light Preload (M) Angular Contact A Rated RPM	Light Preload (M) Angular Contact B Rated RPM	Light Preload (H) Angular Contact A Rated RPM	Light Preload (H) Angular Contact B Rated RPM
7000	P0	10	32000	22000	25600	17600	20800	14300	17600	12100
7001	P0	12	28000	20000	22400	16000	18200	13000	15400	11000
7002	P0	15	24000	17000	19200	13600	15600	11050	13200	9350
7203	P0	17	20000	14000	16000	11200	13000	9100	11000	7700
7004	P0	20	18000	13000	14400	10400	11700	8450	9900	7150
7204	P0	20	17000	12000	13600	9600	11050	7800	9350	6600
7205	P0	25	15000	10000	12000	8000	9750	6500	8250	5500
7206	P0	30	12000	8500	9600	6800	7800	5525	6600	4675
7207	P0	35	10500	7000	8400	5600	6825	4550	5775	3850
7208	P0	40	9600	6500	7680	5200	6240	4225	5280	3575

Japanese Series Heavy Loading Angular Bearing (DF, DFD Assembly) Rated RPM Reference

Ball Bearing No.	Size	TAC angle(60°) Rated RPM	DF Assembly TAC Angle Rated RPM	DFD Assembly TAC Angle Rated RPM
17TAC47B	17	6000	5100	4800
20TAC47B	20	6000	5100	4800
25TAC62B	25	4500	3825	3600
30TAC62B	30	4300	3655	3440
35TAC72B	35	3600	3060	2880
40TAC72B	40	3600	3060	2880

Taiwan Series Ball Bearing (Nominal) Rotation Speed

Ball Bearing No.	Ball Bearing Grade	Size	Angular AC(25°) Rated RPM	Angular C (15°) Rated RPM	Light Preload (L) Angular Contact AC (25°)Rated RPM	Light Preload (L) Angular Contact C (15°)Rated RPM	Light Preload (M) Angular Contact AC (25°)Rated RPM	Light Preload (M) Angular Contact C (15°)Rated RPM	Light Preload (H) Angular Contact AC (25°)Rated RPM	Light Preload (H) Angular Contact C (15°)Rated RPM
708	P5	08	31500	35000	20475	22750	17325	19250	14175	15750
7000	P5	10	33500	30000	21775	19500	18425	16500	15075	13500
7001	P5	12	30000	28000	19500	18200	16500	15400	13500	12600
7002	P5	15	25000	22500	16250	14625	13750	12375	11250	10125
7203	P5	17	20000	19000	13000	12350	11000	10450	9000	8550
7004	P5	20	19000	17000	12350	11050	10450	9350	8550	7650
7204	P5	20	17000	15000	11050	9750	9350	8250	7650	6750
7205	P5	25	15000	13000	9750	8450	8250	7150	6750	5850
7206	P5	30	12000	10000	7800	6500	6600	5500	5400	4500
7207	P5	35	8500	9000	5525	5850	4675	4950	3825	4050
7208	P5	40	7500	8500	4875	5525	4125	4675	3375	3825

Ball Bearing No.	Ball Bearing Grade	Size	Angular A(30°) Rated RPM		Light Preload (L) Angular Contact A (30°)Rated RPM		Medium Preload (M) Angular Contact A (30°)Rated RPM		Heavy Preload (H) Angular Contact A (30°)Rated RPM	
7000	P5	10	48200		31330		26510		21690	
7001	P5	12	26000		16900		14300		11700	
7002	P5	15	23000		14950		12650		10350	

Taiwanese Series Heavy Loading Angular Bearing (DF, DFD Assembly) Rated RPM Reference

Ball Bearing No.	Size	TAC angle(60°) Rated RPM	DF Assembly TAC Angle Rated RPM	DFD Assembly TAC Angle Rated RPM
17TAC47B	17	5400	4590	4320
20TAC47B	20	5400	4590	4320
25TAC62B	25	4050	3443	3240
30TAC62B	30	3870	3290	3096
35TAC72B	35	3240	2754	2592
40TAC72B	40	3240	2754	2592

Please refer to the motor driver and ballscrew grade before choosing a proper fixed side model.

Angular Contact Bearing (DF, DB, DT Assembly) Rated Loading Reference

Japanese Series Balling Bearing			
Model	Contact angle	Dynamic load in KN	Static load inKN
706A	30°	3.28	1.59
708A	30°	5.42	2.90
7000A	30°	8.10	4.68
7001A	30°	8.74	5.42
7002A	30°	9.39	6.30
7203A	30°	16.36	10.90
7004A	30°	16.68	12.20
7204A	30°	22.03	15.10
7205A	30°	24.94	18.90
7206A	30°	34.50	27.20
7207A	30°	45.68	37.00
7208A	30°	54.27	46.60
Model	Contact angle	Dynamic load in KN	Static load inKN
7000B	40°	7.50	4.40
7001B	40°	8.10	5.00
7002B	40°	8.50	5.70
7203B	40°	16.20	11.10
7004B	40°	15.20	11.10
7204B	40°	21.70	15.30
7205B	40°	24.00	18.80
7206B	40°	33.30	27.10
7207B	40°	59.38	48.10
7208B	40°	70.55	60.58

Taiwan Series Ball Bearing			
Model	Contact angle	Dynamic load in KN	Static load inKN
708C	15°	4.86	3.20
7000C	15°	6.48	4.80
7001C	15°	8.10	6.00
7002C	15°	8.58	6.60
7203C	15°	18.30	14.80
7004C	15°	15.55	12.60
7204C	15°	21.22	19.20
7205C	15°	27.21	26.20
7206C	15°	37.90	37.60
7207C	15°	41.79	45.80
7208C	15°	55.24	61.80
Model	Contact angle	Dynamic load in KN	Static load inKN
708AC	25°	4.53	3.00
7000AC	25°	6.15	4.60
7001AC	25°	7.77	5.60
7002AC	25°	8.26	6.20
7203AC	25°	17.65	14.20
7004AC	25°	14.90	12.00
7204AC	25°	20.41	18.40
7205AC	25°	26.08	25.00
7206AC	25°	36.12	36.00
7207AC	25°	39.69	43.80
7208AC	25°	52.65	59.00
Model	Contact angle	Dynamic load in KN	Static load inKN
7000A	30°	7.29	4.21
7001A	30°	7.87	4.88
7002A	30°	8.45	5.67

Heany Loading Angular Bearing (DF, DB, DT Assembly) Rated Loading Reference

Japanese Series Balling Bearing					
Model	Contact angle	DF Dynamic load in KN	DF Static load inKN	DFD Dynamic load in KN	DFD Static load inKN
17TAC47B	60°	38.31	59.40	50.84	89.10
20TAC47B	60°	34.39	55.00	45.64	82.50
25TAC62B	60°	50.79	91.30	67.40	136.95
30TAC62B	60°	46.33	85.80	61.49	128.70
35TAC72B	60°	55.24	118.80	73.32	178.20
40TAC72B	60°	53.46	110.00	70.95	165.00
Taiwan Series Ball Bearing					
Model	Contact angle	DF Dynamic load in KN	DF Static load inKN	DFD Dynamic load in KN	DFD Static load inKN
17TAC47B	60°	34.83	54	46.22	81.00
20TAC47B	60°	31.26	50	41.49	75.00
25TAC62B	60°	46.17	83	61.27	124.50
30TAC62B	60°	42.12	78	55.90	117.00
35TAC72B	60°	50.22	108	66.65	162.00
40TAC72B	60°	48.60	100	64.50	150.00

Fixde Side

Rectangle Design

GMT	THK	NSK
GAK06	AK06	/
GAK08	AK08	/
GAK10	AK10	WBK10-01A
GAK12	AK12	WBK12-01A
GAK15	AK15	WBK15-01A
GAK20	AK20	WBK20-01A
GAK25	AK25	WBK25-01A

Protruding Design

GMT	THK	NSK
GEK06	EK06	WBK06-01A
GEK08	EK08	WBK08-01A
GEK10	EK10	/
GEK12	EK12	/
GEK15	EK15	/
GEK20	EK20	/

Rectangle Design

GMT		KURODA
GSW06	GSWE06	BUK-6
GSW08	GSWE08	BUK-8
GSW10	GSWE10	BUK-10
GSW12	GSWE12	BUK-12
GSW15	GSWE15	BUK-15
GSW20	GSWE20	BUK-20
GSW25	GSWE25	BUK-25

Two-Way Mounting Design

GMT	THK
GBK10	BK10
GBK12	BK12
GBK15	BK15
GBK17	BK17
GBK20	BK20
GBK25	BK25
GBK30	BK30
GBK35	BK35
GBK40	BK40

Round Design

GMT	THK	NSK
GFK06	FK06	WBK06-01A
GFK08	FK08	WBK08-01A
GFK10	FK10	WBK10-01A
GFK12	FK12	WBK12-01A
GFK15	FK15	WBK15-01A
GFK17	FK17	WBK17-01A
GFK20	FK20	WBK20-01A
GFK25	FK25	WBK25-01A
GFK30	FK30	/

Round Design

GMT		KURODA
GRW06	GRWE06	BUM-6
GRW08	GRWE08	BUM-8
GRW10	GRWE10	BUM-10
GRW12	GRWE12	BUM-12
GRW15	GRWE15	BUM-15
GRW20	GRWE20	BUM-20
GRW25	GRWE25	BUM-25

Support Side

Rectangle Design

GMT	THK	NSK
GAF06	AF06	/
GAF08	AF08	/
GAF10	AF10	WBK10S-01
GAF12	AF12	WBK12S-01
GAF15	AF15	WBK15S-01
GAF20	AF20	WBK20S-01
GAF25	AF25	WBK25S-01

Protruding Design

GMT	THK	NSK
GEF06	EF06	/
GEF08	EF08	WBK08S-01
GEF10	EF10	/
GEF12	EF12	/
GEF15	EF15	/
GEF20	EF20	/

Rectangle Design

GMT		KURODA
GUN06	GTN06	BUK-6S
GUN08	GTN08	BUK-8S
GUN10	GTN10	BUK-10S
GUN12	GTN12	BUK-12S
GUN15	GTN15	BUK-15S
GUN20	GTN20	BUK-20S
GUN25	GTN25	BUK-25S

Two-Way Mounting Design

GMT	THK
GBF10	BF10
GBF12	BF12
GBF15	BF15
GBF17	BF17
GBF20	BF20
GBF25	BF25
GBF30	BF30
GBF35	BF35
GBF40	BF40

Round Design

GMT	THK	NSK
GFF06	FF06	/
GFF08	FF08	/
GFF10	FF10	/
GFF12	FF12	/
GFF15	FF15	/
GFF20	FF20	/
GFF25	FF25	/
GFF30	FF30	/

Round Design

GMT		KURODA
GUR06	GTR06	BUM-6S
GUR08	GTR08	BUM-8S
GUR10	GTR10	BUM-10S
GUR12	GTR12	BUM-12S
GUR15	GTR15	BUM-15S
GUR20	GTR20	BUM-20S
GUR25	GTR25	BUM-25S